中国国际进口博览会
CHINA INTERNATIONAL IMPORT EXPO

参展商名录(展馆展位号) ▶▶
EXHIBITORS LIST
(BOOTH NUMBER IN EXHIBITION HALL)

CIIE NEW ERA SHARED FUTURE
新时代 共享未来

扫码了解并下载进口博览会官方APP
Scan the QR code to get the official App for CIIE

2019.11.5-11.10
举办地点：国家会展中心(上海)
Venue: National Exhibition and Convention Center (Shanghai)

主办单位: 中华人民共和国商务部 上海市人民政府
合作单位: 世界贸易组织 联合国开发计划署 联合国贸易和发展会议
联合国粮农组织 联合国工业发展组织 国际贸易中心
承办单位: 中国国际进口博览局 国家会展中心(上海)有限责任公司

Hosts: Ministry of Commerce of the People's Republic of China
Shanghai Municipal People's Government
Partners: World Trade Organization United Nations Development Programme
United Nations Conference on Trade and Development
Food and Agriculture Organization of the United Nations
United Nations Industrial Development Organization International Trade Center
Organizers: China International Import Expo Bureau
National Exhibition and Convention Center (Shanghai) Co., Ltd.

Part 5

服务贸易展区
TRADE IN SERVICES

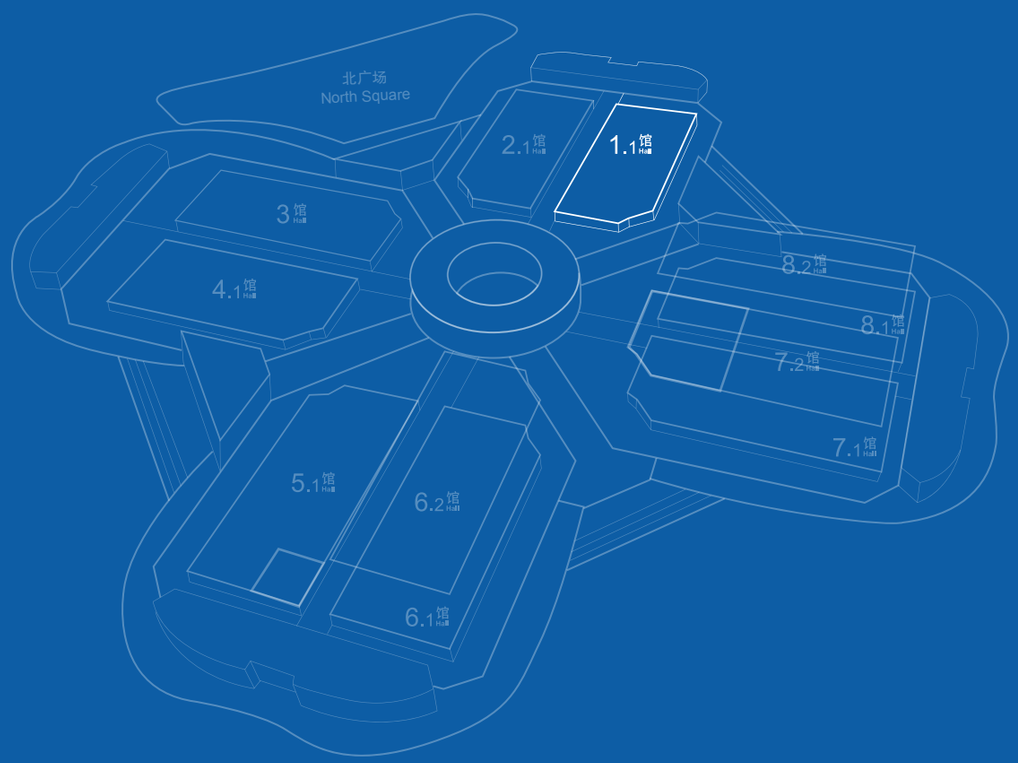

1.1馆 Hall ▸▸

列斯纳斯贝特有限责任公司 / LESSNABSBYT .LTD

1.1A1-01

Address: 俄罗斯 克拉斯诺亚尔斯克边疆区-克拉斯诺亚尔斯克-阿列克谢耶夫街道23号办公室79室 Russia KrasnoyarskiyKray-Krasnoyarsk-Offics 79, 23Aleksheyev Street
Tel: 010-84898413
Email: 1286079119@qq.com
Web:

俄罗斯列斯纳斯贝特有限责任公司成立于2003年4月,已建立木材加工工业园区,园区面积132万平方米,园区内有加工企业18家,主营木材采伐,加工及出口,产品远销中国,欧洲及日本,年产量原木380万立方米,加工板材及其它林业制品近200万立方米。目前在一带一路政策扶持下,公司蓬勃发展。

Silk Road Commerce and Consulting

1.1A1-02

Address: 黎巴嫩 Lebanon Beirut-Gharzeddine Bldg, Alam street, Badaro 4th floor
Tel: +9611391393
Email: Noor@silkroadcc.com
Web:

Our company is specialized in sales and marketing of Lebanese products in China's market. Our product portfolio includes, chocolates and sweets; fruits and avocado; olive oil; nuts and wine. Phoenicia goodies is one of many other brands.

TECOMSA SAL

1.1A1-04

Address: 黎巴嫩 Lebanon Beirut-Badaro - MOzannar BLDG - 1st Floor
Tel: 009611399996
Email: m.khalifeh@tecomsa.me
Web: www.tecomsa.me

Tecomsa S.A.L is a leading firm in IT & Telecommunication, UPS solutions, Digital Marketing and Software development. The mix of applied business experience with solid technology delivery capabilities allows us to better understand the client's needs and propose IT strategies in line with the latest cutting-edge Technologies.

Saint Lucia Health Care Japan

1.1A1-05

Address: 日本 东京 Shinjuku City, Wakaba, 1-chome-22-16 ASTY 106 Japan Tokyo-Shinjuku City-160-0011 Tokyo-to, Shinjuku City, Wakaba, 1-chome-22-16 ASTY 106
Tel: +86 10 56732610
Email: daixuchen@stluciabj.com
Web: www.stluciabj.cn

Saint Lucia Health Care, specializing in rendering one-stop medical facilitation services to Chinese high-net-worth patients/clients, is headquartered in Beijing of China. It has branch offices in Shanghai, Guangzhou, Hangzhou, and Shenzhen.

法国智奥会展集团 / GL events

1.1A1-06

Address: 法国 奥弗涅-罗讷-阿尔卑斯大区-里昂市-兰波河岸59号69002 France Région Auvergne-Rhône-Alpes-Lyon-59 Quai Rambaud 69002
Tel: 021-52558288
Email: vincent.shen@gl-events.com
Web: www.gl-events.com.cn

智奥会展创立于1978年,总部位于法国里昂,是巴黎证券交易所上市企业。以"城市会展综合运营商"为定位,智奥会展的核心业务由三大板块构成:LIVE-活动与体育赛事运营、VENUES-场馆管理、EXHIBITIONS-展会主办。2018年,智奥会展全年综合收入超过10亿欧元,在全球会展届居前列。
GL events, whose HQ locates in Lyon, was founded in 1978. Its core business consists of 3 segments: VENUES (venue management), EXHIBITIONS (exhibition organisation) and LIVE (consulting, design and services for events). In the year of 2018, GL events reported consolidated annual revenue of €1.041 billion, ranking a leading position in the industry.

IMQ GROUP

1.1A2-02

Address: 意大利 Italy Milan-Milan-via Quintiliano 45, 20138
Tel: +86 21 52 38 05 07
Email: gabriele.panzeri@imq-china.com
Web: www.gruppoimq.it

IMQ 集团是意大利官方主要的一致性合格评定服务机构,在测试,检验及认证领域帮助客户进入中国,欧洲及国际市场在以下领域,我们提供评定产品及公司的服务电子电器领域、汽车领域、食品安全和食品接触领域建筑领域在汽车领域,包装和食品领域,我们给予客户在产品开发阶段的协助。
IMQ GROUP is leading Italian body in Conformity Assessment Services; with Testing, Inspections and Certification that support Customers to access to the Chinese, European and International markets. We offer a wide range of services in the sectors: Electric/Electronics, Automotive, Food safety and Food contact, Construction.

中欧之桥 / Sino-EU Link S.r.l.

1.1A2-03

Address: 意大利 ItalyRome-Rome-Via Di Donna Olimpia 20
Tel: +86 (21) 3310 3323
Email: info@sinoeulink.com bryan.zhang@sapience-partners.com
Web: www.sinoeulink.com

中欧之桥协助公司,企业家和机构在意大利和中国之间从事跨境投资,商务拓展和国际关系。我们通过提供精准专业和灵活的服务方案,力求成为意大利卓越企业和中国企业家的主要桥梁之一。
Sino-EU Link S.r.l. is a boutique advisory firm based in Milan and Rome. We assist companies, entrepreneurs and organizations in the field of cross-border investment funding, business development, and international relations between Italy and China.

Mercury Service srls

1.1A2-04

Address: 意大利 Italy Lombardia-Milan-Viale Bacchiglione 12
Tel: 00393312510827
Email: info@mercuryservice.it
Web: www.mercuryservice.it

In 2011, Mercury was launched as a Chinese-speaking Market oriented service company briefing on globally travel, business, culture, design, art and much more. We believed that there was a globally minded audience of readers who were hungry for opportunities and experiences beyond their national borders.And we call them 'travelers': travelers of business, travelers of culture, travelers of art.

AWOT GLOBAL EXPRESS (HK) LIMITED

1.1A2-05

Address: 香港地区 HongKong China FLAT/ROOM 02,05-07 37/F KING PALACE PLAZA 52A SHA TSUI ROAD TSUEN WAN NT
Tel: 021-33681832
Email: cissie_lu@awotglobal.com
Web: www.awotglobal.com

欧华国际物流集团是一家拥有全球网络之无船公共承运人和国际货物运输代理人。作为客户的全球供应链体系之合作伙伴,我們为其提供完善之綜合物流服務的解決方案。歐華目前在中國、美國,加拿大、香港地区、新加坡、台灣地区、泰國和越南等國家和地區擁有分支機構。

Sandy Tours

1.1A2-06

Address: 黎巴嫩 Lebanon down town -beirut-down town
Tel: 00961 01669509
Email: incoming@sandy.tours
Web:

Sandy tours provide vast array of innovative ideas and quality services, from inbound and outbound to car rental and travel assistance, and from group offers to individual custom-tailored tours, we are also commits ourselves as a leader to promote the travel industry in Leba.

谱尼测试科技(香港)有限公司 / Pony testing technology (Hong Kong) Co. Ltd.

1.1A2-07

Address: 香港地区 UNIT 2508A 25/F BANK OF AMERICA TOWER 12 HARCOURT ROAD CENTRAL HONGKONG
Tel: 010-83055000-2022
Email: qr@ponytest.com
Web: www.ponytest.com

谱尼测试科技(香港)有限公司,隶属于谱尼测试集团,集团总部位于北京,服务网络遍布各地。公司拥有完备的服务体系,可为客户提供综合性检验检测、认证、监测、校准、评价、咨询、培训等一站式、全面优质服务。

Pony Testing Technology (Hong Kong) Co. Ltd., headquartered in Beijing, is a subsidiary of Pony Testing International Group. We can provide a comprehensive and one-stop testing, certification, monitoring, metrological confirmation, evaluation, training, consultation and other services with a complete service system and widespread service networks.

爱米国际有限责任公司 / E.M.E International SARL

1.1A2-08

Address: 黎巴嫩 Lebanon Beirut-Beirut-Tauk Building 1t Floor, Fanar Main Road
Tel: 00961-1-874926
Email: china_lebanon@yahoo.com
Web: www.emetour.com www.chinaarab.org

爱米国际是中黎共同投资注册于黎巴嫩的合资企业,我们主营进出口、市场营销、广告、教育、法律和市场咨询服务。我们拥有两个巧克力品牌、一个旅游品牌和一个管理咨询品牌,多年来一直为中国客户打开中东非洲市场和阿拉伯企业和产品进入中国市场提供服务。我们的爱米旅游为中国政府、商务和个人团组提供中东和非洲各种旅游定制服务。

EME is a limited company registered in Lebanon by both Chinese and Lebanese investors in the field of international trading, MENA marketing, MENA & Africa tourism, education & exchange, MENA advertising and consultant. It owns and operate many brands, such as two chocolate brands, one tourism brand and one management consultant brand.

Egypt Foundation for Integrated Development (El Nidaa)

1.1A2-09

Address: 埃及 Egypt Giza-3 Abdallah EL Kateb St.
Tel: +20233370842
Email: namees.nabeel@elnidaa.org
Web:

El Nidaa supports the development of entrepreneurship among disadvantaged groups (youth and women in rural communities) in Upper Egypt by providing access to vocational education & trainings and revival of traditional crafts.

Wisdom House company

1.1A2-12

Address: 埃及 Egypt Cairo-Cairo-174 El Tahrir Abdin St. Third Floor
Tel: +223936038
Email: wisdomhousecompany@gmail.com
Web: wisdompalacear.net/eg-ar

Wisdom House Egypt
Beit El Hekma for Cultural Investments was established in Cairo and the Arab countries six years ago with the aim of building a bridge of real cultural and human cooperation between the East and the East, and linking through culture and its products and various means between the hearts and minds of Arabs and the rest of the world, especially China The famous Tahri.

Atos SE

1.1A2-13

Address: 法国 France Bezons-80 quai Voltaire-River Ouest
Tel: 86-10-69115509
Email: jeffery.liu@atos.net
Web: www.atos.net

Atos is a global leader in digital transformation with over 110,000 employees in 73 countries and annual revenue of over € 11 billion. European number one in Cloud, Cybersecurity and High-Performance Computing, Atos provides end-to-end Orchestrated Hybrid Cloud, Big Data, Business Applications and Digital Workplace solutions. Atos is the Worldwide Information Technology Partner for the Olympic.

COTECNA INSPECTION S.A.

1.1A3-01

Address: 瑞士 Switzerland Geneva-58, rue de la Terrassière
Tel: 021-68692300
Email: ciie@cotecna.com.cn
Web: www.cotecna.com

Cotecna 集团是一家专业提供测试,检验,认证服务的国际领先供应商,遍布全球50多个国家,拥有近100个办事处及认证实验室。我们提供贸易便利化解决方案,致力于为客户提升供应链的安全性及高效性。我们专业于以下四大领域并提供服务:农业、食品安全、政府和贸易、矿产和金属。

Cotecna is a global provider of testing, inspection and certification services with 4000 employees in more than 100 offices across 50 countries. Our network of professionals and certified laboratories provide expertise across four key sectors: agriculture, food safety, government and trade, as well as minerals and metals.

Australia Wool Testing Authority

1.1A3-02

Address: 澳大利亚 Australia VICTORIA-KENSINGTON-70 ROBERTSON ST.
Tel: +86 10 84603522
Email: lijing@ccic.com
Web: www.awta.com.au

As the largest wool testing organization in the world, AWTA plays a major role in providing a bridge between the research and the commercial application of testing technology in Australia and overseas. Cooperating with CCIC(China certification & Inspection Group), AWTA offers independent,high quality and accurate local testing, certification and inspection service worldwide as national team.

TUV Rheinland AG

1.1A3-03

Address: 德国 Koln-科隆 Germany Koln-Am Grauen Stein, 51105 Koln, Germany
Tel: 8621-61081214
Email: Nicole.lv@tuv.com
Web: www.tuv.com

德国莱茵TUV作为国际知名的独立第三方检验、检测和认证机构,拥有超过145年的经验,在全球五大洲69个国家设有500家分支机构,全球员工数超过20,000。大中华区员工已超过4,000人,服务范围涵盖工业及能源服务、电子电气产品检测、通讯产品检测、消费品检测、人体工学评估、交通服务、轨道系统安全、绿色产品认证、莱茵学院与生命关怀、数字化与信息安全及管理体系审核等服务。

TUV Rheinland is an internationally independent third-party testing, inspection and certification organization which offer services such as industrial and renewable energy services, electronic product testing, telecom testing, fast-moving consumer products testing, ergonomics evaluation, mobility, railway safety, Digital Transformation & Cybersecurity and management system.

Hong Kong Tourism Board

1.1A4-02

Address: 香港地区 HongKong China Hong Kong-North Point-11/F, Citicorp Centre, 18 Whitfield Road
Tel: 852 26078260
Email: charles.tsai@hktb.com
Web: www.discoverhongkong.com

A Government-subvented body, the Hong Kong Tourism Board is tasked with maximising tourism's social and economic contribution to the Hong Kong community and promoting Hong Kong as a world-class destination.

巴马丹拿建筑及工程师有限公司 / P&T Architects and Engineers Limited

1.1A4-03(1)

Address: 香港地区 香港北角英皇道633号33楼 Hong Kong 33/F, 633 King's Road, North Point, Hong Kong
Tel: 86-21-62372808
Email: kellyliu@p-t-china.com
Web: www.p-t-group.com

The P&T Group is an award-winning, global design firm, providing clients with innovative, commercially successful and sustainable design solutions since its inception in 1868.

江东投资管理有限公司 / JD Investment Management Limited

1.1A4-03(10)

Address: 香港地区 香港德辅道中300号华杰商业中心9A室 Hong Kong Room 9A, Wah Kit Commercial Centre, No.300 Des Voeux Road Central, Hong Kong
Tel: (852) 98290978
Email: huangzeyan@gmail.com
Web:

江东投资管理有限公司是一家从事跨境投融资解决方案的专业化服务机构。公司拥有一支优秀并极具经验的跨境专家团队,主要合伙人均为在资本市场具备十年以上丰富经验的资深律师、会计师以及投资银行家组成。公司致力于为客户量身定制国际化、专业化、一体化的融资上市、投资并购、直接投资、投资管理等解决方案。

JD Investment Management Limited is a professional service company specializing in cross-border investment and financing solutions. The company has a team of qualified cross-border experts including lawyers, accountants and investment bankers. The company strives to provide international, professional, integrated solutions including listing, M&A, direct investment and investment management, etc.

何显毅建筑工程师楼地产发展顾问有限公司 / Ho & Partners Architects Engineers & Development Consultants Limited

1.1A4-03(11)

Address: 香港地区 香港北角屈臣道8号海景大厦C座1楼 Hong Kong Floor 1, Block C, Seascape Building, 8 Watson Road, North Point, Hong Kong
Tel: 021-6390 6067
Email: shmarketing@hpahk.com
Web: www.hpahk.com

hpa何设计(何显毅建筑工程师楼地产发展顾问有限公司)于1980年成立,从1992年开始至今都是香港特别行政区政府建筑署之建筑顾问名单中之"一级顾问"。何设计建筑设计事务所(深圳)有限公司更于2014年中在CEPA 协议下成为香港首家获得甲级建筑工程设计资质的独资公司。香港,深圳,上海,马来西亚都有办事处。

Founded in 1980, hpa is on the "Brand 1" list of Architectural Consultants of the Hong Kong Government since 1992. In 2014, through CEPA, hpa was the first Hong Kong architectural practice to be awarded with Grade A Qualification in China by the Ministry of Housing and Urban-Rural Development of the People's Republic of China.

名唐展览(香港)有限公司 / Milton Exhibits (Hong Kong) Limited

1.1A4-03(12)

Address: 香港地区 九龙,-新蒲岗,-8-10楼,Artisan Hub,六合街9号,Hong Kong Kowloon, -San Po Kong, -8-10/F, Artisan Hub, 9 Luk Hop Street,
Tel: 852 8104 8872
Email: marketing@milton-exhibits.com
Web: milton-exhibits.com

名唐展览集团是以亚洲为基地的整合市场营销服务公司,透过展会主建、展商服务、活动营销、数码营销及原创设计等服务,致力为客户及其目标客户建立深刻的体验。集团的9个办事处分布在北京、广州、香港、澳门、孟买、新德里、上海、新加坡和台北,我们在世界各地赢得了众多长期客户的支持及互信的合作伙伴。

Milton Exhibits Group is an Asian-based integrated marketing service provider dedicated in building engaging experience for clients and their target audience. Our services spanning from Exhibition Contracting, Exhibitor Services, Event Marketing, Digital Solutions and Creatives & Design. With our excellent service, we have earned a long list of retaining clients and long-term trusting partners.

普世合作組織絲路有限公司 / Silk Road Strategies and Alliance Limited

1.1A4-03(13)

Address: 香港地区 HongKong China Tsuen Wan, Hong Kong-Room 1802, 18/F, Wong's Factory Building, 368-370 Sha Tsui Road,
Tel: 852 21151909
Email: joseph.leung@silkroadsa.com.hk
Web: www.silkroadsa.com.hk

普世合作組織絲路有限公司以從事運輸物流配送研究,協助國際中小企,發展貿易採購,高品質和衡量標準、倉儲、運輸配送服務及事業開拓的社會組織和高端網路系統智庫,致力促進世界貿易投資和文化交流,並推廣銀髮族及教育協調基礎等多元化項目積極準備開拓「五行行」採購和專注五類古代「絲綢之路」衍生之產品、以茶、瓷器、絲綢、銀飾、乾糧等項目為主以安全、務實為前題,從而協助農、工、商,研發高品質產品。

SILK ROAD STRATEGIES AND ALLIANCE LIMITED (SRSA) aims to inherit historical tradition and promote cultural exchanges and focus on sourcing in five product categories including silk, tea, potteries, silverware and dried food. SRSA will actively promote trade logistics and support financing platform development, to ensure products are of high quality and meet the market demand.

投资推广署 / Invest Hong Kong

1.1A4-03(14-15)

Address: 香港地区 投资推广署香港办事处 (临时办事处) 前湾仔警署 香港湾仔告士打道123号 Hong Kong (Temporary Office) Ex-Wanchai Police Station, 123 Gloucester Road, Wanchai
Tel: +86 21 6351 2233
Email: jessicamak@sheto.gov.hk
Web: www.investhk.gov.hk

投资推广署是香港特别行政区政府属下部门,专责促进外来直接投资,协助企业在香港开业和扩展业务。

投资推广署的办事处遍布世界各地30个主要商业城市,并有专属团队为客户提供免费量身订造的支持,过程一概保密。

InvestHK is the Hong Kong Special Administrative Region (HKSAR) Government Department responsible for attracting Foreign Direct Investment and supporting overseas and Mainland businesses to set up or expand in Hong Kong.

Our team provide free advice and customised services to help businesses succeed in our vibrant city.

亞太顧問有限公司 / Asiapac Consultants limited

1.1A4-03(16)

Address: 香港地区 香港-香港-香港灣仔軒尼詩道 253-261 號依時商業大廈 8 樓 801-2 室 Hong Kong Room 80-2, 8/F., Easey commercial Building, 253-261 Hennessy Road, Wanchai, Hong Kong
Tel: +852-23695502
Email: alaxchik@netvigator.com
Web: www.asiapacgroup.com

我們是一所於一九九三年成立的提供專業會計及顧問服務的集團公司,總部設在香港,並在北京、深圳、廣州、上海設有辦事處。我們的專業服務包括:成立中國、香港地区及海外有限公司、會計、審計、公司秘書服務、中國及香港地区稅務、貿易支援服務、融資貸款、上市、財務管理和其他商業服務。我們的客戶遍布全球,如中國、日本、韓國、印度、英國、德國、法國、美國、加拿大等。

We are a group of professional accounting & consulting companies established since 1993, having offices in Hong Kong, Beijing, Shenzhen, Guangzhou and Shanghai. We provide a full range of professional services including : Company Setup in Hong Kong region, China & Overseas; Accountancy; Auditing; Company Secretarial Services; Taxation; Trading Support Services; Finance, Listing & Business Services.

FreightAmigo Services Limited

1.1A4-03(17)

Address: 香港地区 尖沙咀东科学馆道1号康宏广场1112室 Hong Kong Unit 1112, 11/F, Concordia Plaza, 1Science Museum Road, Tsim Sha Tsui
Tel: +852 28121686
Email: ivy.tse@freightamigo.com
Web: www.freightamigo.com/zh_cn

FreightAmigo为全球化实时物流网上平台，提供海陆空铁路进出口运输供应链服务。我们利用大数据分析及人工智能提供实时国际货运报价，货件信息和状态，并提供增值服务包括报关、货物运输保险及贸易融资等，务求让客户一站式在线完成订仓以及管理整个供应链。
FreightAmigo is a 24/7 global logistics eMarketplace, providing one-stop supply chain services on air/sea/rail transport. We make use of big data analytics and AI to integrate the sophisticated logistics data, strengthen logistics operations in the Greater Bay Area, foster and streamline the collaboration along the supply chain.

Eliron Logistics Limited

1.1A4-03(19)

Address: 香港地区 HongKong China TSIM SHA TSUI-Kowloon, Hong kong-2003 20/F TOWER 5 CHINA
Tel: +852 30657709
Email: elias.heikari@eliron.com.hk info@eliron.com.hk
Web: www.eliron.com.hk

ELIRON cargo tracking is SaaS based stand alone tracking solutions independent from any logistics operators. It is designed to track critical shipments reliable and affordable, globally. Our solutions are based on IoT, GSM network mobile device localisation, small GSM-based tracking devices and an Internet cargo tracking portal.

瑞丰德永国际商务（中国）有限公司 / RICHFUL DEYONG INTERNATIONAL BUSINESS (CHINA) LIMITED

1.1A4-03(8)

Address: 香港地区 香港-香港金钟道89号力宝中心二期21楼 Hong Kong HK-FLAT/ RM2107 LIPPO CENTRE TOWER 2,89 QUEENSWAY ADMIRALTY
Tel: 86-21-62120692
Email: shmgr@rfdy.com
Web: www.rfdy.hk

瑞丰德永(Richful Deyong)2008年始创于香港，系卓佳(Tricor)集团成员，是亚洲具有领先地位的专业服务机构，在全球21个国家/地区47个城市设有办事处，拥有2500多名员工，服务超过30000客户，1300间香港联交所上市公司，500间新加坡和马来西亚上市公司。
Richful Deyong was founded in Hong Kong in 2008, is a member of the Tricor Group and a leading professional services organization in Asia. With 47 offices in 21 countries, Richful Deyong has more than 2,500 employees and has served more than 30,000 clients, including 1,300 Hong Kong stock exchange listed companies, 500 Singapore and Malaysia listed companies.

建築設計及研究所有限公司 / Architecture Design and Research Group Ltd.

1.1A4-03(18)

Address: 香港地区 香港銅鑼灣禮頓道111號利園六期10樓 Hong Kong 10/F, Lee Garden Six, 111 Leighton Road, Causeway Bay, Hong Kong
Tel: 852 28081450
Email: adrg@adrg.com
Web: www.adrg.com.hk

Architecture Design and Research Group Ltd. was founded by a group of individuals interested and concerned with the development of architectural excellence in Hong Kong region and Mainland. Members of AD+RG have actively involved in the last few years to connect the public with architecture. Committed to excellence in architecture and the ideal of a high-quality sustainable environment for the community.

施文律师行 / F. Zimmern & Co

1.1A4-03(22)

Address: 港地区 香港中环皇后大道中15号置地广场约克大厦10楼1002-1003室 Hong Kong Rooms 1002-1003, 10/F, York House, The Landmark, 15 Queen's Road, Central
Tel: +85221602374 / 2160 2374
Email: jacquelinepoon@fzimmern.com.hk
Web: www.fzimmern.com.hk/eng/home

Founded in Hong Kong in 1935, F. Zimmern & Co. is a well-established Hong Kong law firm providing a wide range of litigation and non-litigation legal services, with a particular emphasis on corporate finance, banking services, real estate, arbitration, mediation, litigation, intellectual property, corporate and commercial, debt recovery, trust and estate management, international notary, and Chine.

MapKing International Limited

1.1A4-03(9)

Address: 香港地区 HongKong China 707, 7th Floor, Shui Hing Centre, 13 Sheung Yuet Road, Kowloon Bay, Hong Kong
Tel: 2740 9680
Email: sales@mapking.com
Web: www.mapking.com

MapKing International Limited established in 1996 which is specialized in applications of geo-spatial technologies for intelligent city with focus in map related cutting edge mobile and internet applications. We provide data, software and technical services for applications in LBS. We serve world top MNCs and government in internet/ mobile/ traffic business sector with our map, live traffic...etc

纵横国际会计师行有限公司 / GLOBAL CPA (HK) LIMITED

1.1A4-03(18)

Address: 香港地区 湾仔-港湾道1号展广场办公大楼26楼2603室 Hong Kong WAN CHAI-SUITE 2603, 26TH FLOOR, OFFICE TOWER, CONVENTION PLAZA, 1 HARBOUR ROAD,
Tel: (852) 2868 9888
Email: info@cpachina.com.hk
Web: www.cpachina.com.hk

纵横国际会计师行有限公司(纵横国际)为Integra International 中国香港代表, Integra International在200个 城市设有办事处，业务遍及全球五大洲100个国家，并专长于国际和本土市场提供优质的国际商业咨询、税务、审计、会计和法律咨询服务。在中国，纵横国际的服务历史悠久，合作伙伴涵盖政府、中央企业、国有企业、上市公司、大型私营企业以及私募基金。

F S International Limited

1.1A4-03(23)

Address: 香港地区 HongKong China Sheung Wan-No. 148 Wing Lok Street-9/F, Nam Wo Hong Building
Tel: 85229052735
Email: eddy@fsihk.com
Web: www.fschina.com

FS International was established in Hong Kong in September 1989. In over years of service to international shippers, the Company has become one of the most trusted names in global logistics and transportation in its region. Headquartered in Hong Kong , the company has branch offices in major cities in the Far East.

Kerry Logistics (Hong Kong) Limited

1.1A4-03(2-7)

Address: 香港地区 HongKong China 16/F, Kerry Cargo Centre, 55 Wing Kei Road, Kwai Chung, HK
Tel: 85224103179
Email: heidi.hy.chow@kerrylogistics.com
Web:

UL Gmbh

1.1A4-04

Address: 美国 United States of America Illinois-Northbrook-333 Pfingsten Road Northbrook Illinois, 60062
Tel: +86-10-85277133
Email: jessie.yu@ul.com
Web: www.ul.com

UL helps create a better world by applying science to solve safety, security and sustainability challenges. We empower trust by enabling the safe adoption of innovative new products and technologies. All of our work, from independent research and standards development, to testing and certification, to providing analytical and digital solutions, helps improve global well-being.

SGS集团 / SGS GROUP MANAGEMENT SAS

1.1A4-05

Address: 瑞士 Switzerland PLACE DES ALPES 1, GENEVE
Tel: 8621-61072917
Email: fanny.wang@sgs.com
Web: www.sgs.com

SGS是国际公认的检验、鉴定、测试和认证机构，在世界各地共有97,000多名员工，分布在2,600多个分支机构和实验室，构成了全球性的服务网络。
SGS is the world's leading inspection, verification, testing and certification company. SGS is recognized as the global benchmark for quality and integrity. With more than 97,000 employees, SGS operates a network of over 2,600 offices and laboratories around the world.

AECOM

1.1A5-03

Address: 美国 United States of America CA-Los Angeles-1999 Avenue of the Stars | Suite 2600
Tel: 86-21-61577888
Email: GC-MarketingandCommunications.Service@aecom.com
Web: www.aecom.com

AECOM是全球顶尖的基础设施全方位综合服务企业，我们充分整合全球专业知识和经验，携手合作伙伴，深入当地社区，帮助公共及私营客户应对最复杂的挑战。
无论是为经济及社会发展注入新动能的前瞻性城市规划与更新，铸造构成城市天际线的标志性摩天大楼，建立安全互联的交通系统，提供清洁的水资源及能源，还是修复受损环境，我们遍及全球的项目为当地带来深具影响力的变革。
AECOM, a premier, fully integrated global infrastructure firm, works with public and private sector clients and partners, communities and colleagues to develop and implement innovative solutions to the world's most complex challenges.

皇家加勒比游轮船务（中国）有限公司 / Royal Caribbean Cruise Ltd.

1.1A5-06

Address: 美国 United States of America Florida-Miami-1080 Caribbean Way
Tel: 021-25011759
Email: davidtan@rcclapac.com
Web: www.rcclchina.com.cn

作为在中国发展迅猛的游轮公司，自2009年开启第一条中国上海母港航线，皇家加勒比一直以来致力于引领游轮产业的发展，率先在中国市场部署和经营世界级游轮，先后引进两艘吨位大、船龄新、设施先进的游轮——“海洋航行者号”及“海洋水手号”，引领中国游轮行业进入“大船时代”。皇家加勒比于2015-2016年陆续将全新制造、科技含量极高的游轮“海洋量子号”“海洋赞礼号”引入中国，将中国游轮市场推入“新船时代”。2019年皇家加勒比把“超量子系列”游轮部署中国市场。这凝聚皇家加勒比多年在亚洲市场通过产品优化实践积累的经验和知识，对游轮新船设计与建造的国际水准发起了又一次冲击，将成为中国游轮市场发展新的里程碑。

法国欧葆庭养老康复集团 / ORPEA

1.1A5-01

Address: 法国 France PARIS-PUTEAUX 92813 -12 rue Jean Jaurès – CS 10032
Tel: +33 (0)147757807
Email: m.cha@orpea.cn
Web: www.orpea.cn www.orpea-groupe.com

法国欧葆庭养老康复集团成立于1989年，全球总部位于法国巴黎，于2002年在巴黎纽约泛欧交易所上市，市值超过60亿欧元。集团在全球14个国家经营950家机构，96577张床位。2013年在上海成立分公司 ，致力于养老康复项目开发，目前品牌养老中心已经开业2家，分别位于南京和长沙。
The ORPEA Group was founded in 1989 by Dr. Jean-Claude Marian. The Group's mission is to support and take care of people with physical or psychological loss of autonomy, by providing them with the essential nursing and care, in order to ensure their well-being, and respect their dignity and individuality. As an European leader in dependency care, ORPEA runs 950 facilities in 14 countries.

TRIP.COM AUSTRALIA PTY LIMITED

1.1A5-04

Address: 新加坡 Singapore SUQARE-PAYA LEBAR-60 PAYA LEBAR ROAD, #08-43
Tel: 86 21 34064880
Email: wangqiang@ctrip.com
Web: www.trip.com

Trip.com is a one-stop booking platform that committed to the integration of global resources. With more than 1.2 million hotels in 200 countries and regions, we've built an extensive hotel network to give our customers a fantastic choice of accommodation. Our far-reaching flight network has over 2 million individual flight routes connecting more than 5,000 cities around the globe.

六洲酒店集团 / Six Continents Hotels

1.1A5-07

Address: 美国 United States of America Georgia 30346-2149-Atlanta-3 Ravinia Drive, Suite 100
Tel: +86 21 3106 8252
Email: karena.liu@ihg.com
Web: www.ihg.com

洲际酒店集团是全球领先的酒店管理集团，拥有十六大闻名遐迩的品牌，满足消费者不同场合的各类需求。集团旗下酒店超过5600家，遍布全球100多个国家和地区。作为最早进入中国市场的国际酒店集团之一，洲际酒店集团于过去的35年间在此建立了领先的市场地位。
IHG is one of the world's leading hotel companies with a portfolio of 16 renowned brands, meeting the needs of guests in different occasions. IHG has more than 5,600 hotels in over 100 countries and regions. As one of the first international hotel groups to enter the Chinese market, IHG has established a leading market position in the past 35 years.

Kingdom music Education Group Limited

1.1A5-02

Address: 香港地区 HongKong China Room1905, 19/F, China Resources Building 26 Harbour Road, Wanchai HongKong
Tel: 13007496060
Email: chengpiano@aliyun.com
Web:

万豪国际集团 / Marriott International

1.1A5-05

Address: 美国 United States of America Maryland-Bethesda-Bethesda, Maryland, USA
Tel: 15800775786
Email: lin.xing@marriott.com
Web:

万豪国际集团是全球领先的酒店集团，美国财富500强企业之一，总部位于美国马里兰州贝塞斯达，旗下30个酒店品牌在全球130个国家和地区总共开业了7000家酒店，全球常客计划会员总数达1.30亿人。
万豪集团拥有30个酒店品牌，其中有23个品牌已进入中国，包括奢华品牌：JW万豪、瑞吉、丽思卡尔顿、艾迪逊、豪华精选、W酒店；高端品牌：喜来登、威斯汀、艾美、万丽；以及精选服务品牌：万怡、福朋等。
Marriott International is a leading hotel management company in the world and one of the American Fortune 500 firms, with 7,000 properties in 30 brands spanning 130 countries and territories and over 130 million loyalty program members around the world.
Among the company's 30 acclaimed hotel brands, 23 of them have debuted in China.

DECATHLON

1.1A5-08

Address: 法国 France Ascq-Villeneuve-d-4 boulevard de Mons 59650
Tel: 18516699409
Email: lily.zhu@decathlon.com
Web: www.decathlon.com.cn

DECATHLON Group, founded in 1976, in Lille France, now is the world's biggest integratedsports company. It possesses the whole industrial chains of sport products withresearch & design, owned brands, retailing, logistics and production. Thepurpose of DECATHLON is to sustainably make the pleasure and benefits of sportaccessible to the many. Till the end of 2018, DECATHLON has had 1,511 stores in 51countries and regions. For production part, it has distributed in 30 countries &regions all over the world.

土耳其航空公司 / Turkish Airlines

1.1A5-09

Address: 土耳其 Turkey Istanbul-Turkish Airlines General Management Building,Ye ilköy Mah. Havaalanı Cad. No:3/1 Yesilkoy
Tel: 021-32220125
Email: sli@thy.com
Web: www.thy.com

Established in 1933 with a fleet of five aircraft, Star Alliance member Turkish Airlines has a fleet of 335 aircraft flying to 311 worldwide destinations as 261 international and 50 Turkey domestic. TA flies to more countries than any other airline. TA started its operation in China in 1999 and continues with B777-300 aircrafts, including 49 business class seats and 300 economy class seats.

木兰创意文化发展株式会社 / Mulan Promotion Co.,ltd.

1.1A6-01

Address: 日本 东京都-千代田区大手町-2-6-2 日本大厦961室 Japan tokyo-Chiyoda-ku-Nippon Bldg.961, Otemachi 2-6-2
Tel: +81-3-6262-7278
Email: sandy_lee@mulan.co.jp
Web: www.mulan.co.jp

公司成立于1999年。由策划·运营中日大型文化交流活动、代理著作权版权、投资·策划·制作中日合拍影视网剧等主要业务构成。公司拥有专业技术与商务团队，曾主导企划、制作、运营“中日电影节”、CCTV＋niconico“日中热线频道”等众多中日合作项目。公司全力以赴构筑中日两国间的影视动漫新媒体内容的综合平台。

株式会社日本品牌

1.1A6-02

Address: 日本 Japan 東京都-千代田区-大手町2-6-2日本ビルヂング961
Tel: 0081-3-6262-7747
Email: shihua@nihonbrand.jp
Web: www.nihonbrand.jp

对日本企业开拓中国市场进行支援，CCTV中视购物日本总代理，在CCTV电视购物中制作运营“日本健康生活馆”节目。于香港新华集团共同设立“广东新华日品供应链管理有限公司”。

株式会社科贝乐

1.1A6-03

Address: 日本 Japan 东京都港区青山3-16-14 2F
Tel: 021-56985655
Email: cuiying.shan@zhiedu.com
Web: copel.co.jp/copel.cn

COPEL科贝乐是源自日本的全脑早教新锐定义者，27年品牌历史，在全球拥有超过180家中心。0-6岁国际全脑教育的早教品牌，开创智慧养育的新锐生活方式，激发孩子的无线潜能，让每一个孩子轻松驾驭自己的人生，也让教育变得有效，有趣，轻松与神奇。

波兰经济传媒协会 / Stowarzyszenie Polskich Mediow

1.1A6-04

Address: 波兰 Poland Warszawa-Warszawa-ul. Swietokrzyska 30/157, 00-116 Warszawa Poland
Tel: 008613701896513
Email: secretary@meorient.com
Web:

波兰经济传媒协会成立于1989年，作为与政府和企业互联互通的桥梁与纽带，协会通过经济传播的报刊、广播、电视、网络、新媒体、展会等相关机构提升企业形象和在国际市场的知名度。现旗下有中东欧（波兰）贸易博览会China Homelife & Machinex、中东欧经贸论坛、中东欧企业优品奖等高级别经贸交流活动。

韩国易斯达航空公司 / EASTARJET Co.,Ltd

1.1A6-05

Address: 韩国 首尔市-江西区阳川路34阳西大厦4层易斯达航空有限公司 ROK (Republic of Korea) Seoul-4F,Yangseo B/D,534-0 banghwa 2-dong,Gangseo-gu
Tel: 68339275
Email: baeksy@eastarjet.com
Web: www.eastarjet.com

易斯达航空是一家尽其社会责任的‘国民’航空公司，它高度重视飞行安全，以便宜的票价创导航空旅游大众化。易斯达航空更会与国民结下宝贵友谊，共同创造超级过瘾的回忆。易斯达航空还与全世界屈指可数的航空维修企业合作，实行24小时实时维修系统。另外，以韩国民间航空驾驶协会（ALPA-K）标准为乘客提供舒适、安全的航空之旅。易斯达航空的梦想是超越亚洲，走向世界，成为顶级的超一流航空公司。
Eastar Jet is an airline that fulfills social responsibility. We hope to popularize air travel by providing reasonable costs to our passengers while providing the utmost safety in our flights. We also cooperates with a handful of aviation maintenance companies around the world to implement a 24-hour real-time maintenance system.Our goal is to go beyond Asia and become the greatest airline worldwide.

Tourism Authority of Thailand

1.1A6-06

Address: 泰国 Thailand 1600 New Phetchaburi Road, Makkasan, Ratchathewi, Bangkok 10400, THAILAND
Tel: 021-33663409
Email: nok@tatinchina.com
Web:

DARGAUD GROUP

1.1A6-07

Address: 法国 France 57 rue Gaston Tessier, CS50061, 75166 Paris Cedex19
Tel: 021-68587655
Email: 985874917@qq.com
Web: www.dargaud.com

Dragontoon Group partnered with French Dargaud Group which is the largest animation group in Europe, with a history of more than 80 years. It's also the earliest animation producer in Europe and is known as "European Disney". Theme parks are same level as Universal Studios with international advanced high-tech amusement experience.

Activo Travel GmbH

1.1A6-08

Address: 德国 Germany Hessen-Frankfurt-Vilbelerstrasse 27-29
Tel: 010-64489696-60712
Email: ye.wei@activo-travel.com
Web:

WeWork Hong Kong Limited

1.1A6-10

Address: 美国 United States of America New York-New York-115 W 18th St, 2nd Floor
Tel: 18521306691
Email: carmen.zhu@wework.com
Web: www.wework.com

WeWork旨在打造满足您需求的空间——构建全球工作空间网络，为全球会员提供办公空间、链接互动社区、提供硬件设施及服务。WeWork创造者社区旨在激励会员缔造有意义的事业、创造有意义的人生，助力会员事业及生活的共同成长。WeWork由Adam Neumann先 生 及Miguel McKelvey先 生于2010年共同在纽约成立，现在已在全球范围拥有近万名员工。

3301743 NOVA SCOTIA LIMITED

1.1A6-11

Address: 加拿大 Canada Nova Soctia-Halifax-4441 Prospect Road Bayside
Tel: +86-21-80258666-8235
Email: ciie@gsgolf.ca
Web: www.granitespringsgolf.com

Granite Springs Golf Club成立近30年，距离加拿大市中心仅30分钟车程；拥有一个标准杆72杆的18洞高尔夫球场，坐拥绝佳的景观。现由国际化俱乐部服务管理公司：嘉庭会运营；其拥有专业管理和经营系统；坚持高效率与品质的管理模式进行俱乐部的开发、管理及会员维护。

APEX ONE PTE.LTD.

1.1A7-01

Address: 新加坡 Singapore 61 ROBINSON ROAD #15-02 ROBINSON CENTRE
Tel: 0595-28105988
Email: szq618@139.com
Web: www.apexonepte.com

ApexOne竞业于多元文化发展、创造品牌精品，精心研究世界各国家居潮流，以自然和植物为理念创造和推广新的生活方式。公司与世界著名的艺术家和文化产业建立广泛的联系、达成资源共享，创意共成。与日本建筑和室内设计大师-黑川雅之教授有深度的合作。

澳门芒果国际传媒有限公司

1.1A7-02(10)

Address: 澳门地区 Macao China 荷兰园大马路106-122栢蕙花园地下BB铺
Tel: 853-28717582
Email: caccychoi@aliyun.com
Web: www.macaumango.com

我们拥有澳门强大团队为核心，汇聚国内外卓越的团队。主营包括国内外品牌推广宣传、市场策划营销、广告拍摄制作等业务。公司成立以来，以专业的运营制作和执行，赢得各品牌方的口碑，是众多知名企业和发展中企业传播自身形象及产品的首选媒界。

澳门设计中心

1.1A7-02(11)

Address: 澳门地区 Macao China 澳门黑沙环制造厂巷5号
Tel: +85328520335
Email: info@dcmacau.com
Web: www.dcmacau.com

澳门创意设计业界唯一综合专业服务平台，由具30多年历史的澳门设计师协会筹划而成，拥有丰富的文创项目筹划经验及高效的执行能力，集结全澳最庞大的跨领域设计资源，曾发动逾百位澳门设计创意及艺术人才打造“澳门光影节2017”、全球首个“凯斯. 哈林迷宫之旅澳门站”、目前中国最大型的梵高沉浸式体验展览“以及组织多家澳门本土老店参与《社区文创专项资助计划》等，为客户整合最优质设计服务及技术，提供具独特创意的项目方案。

同點設計策劃有限公司 / TODOT DESIGN & PLANNING LIMITED

1.1A7-02(3)

Address: 澳门地区 騎士馬路678文創園4樓B座 Macao estrada dos cavaleiros 63-69 parque creativo de cultura 4B
Tel: +853 6630 6587 / +853 6630 6587
Email: bob@todot-design.com
Web: www.todot-design.com

同點設計策劃有限公司（下稱 Todot Design）是一支多元設計團隊，團隊成員分別來自澳門地区、香港地区及中國內地。不同的文化背景為我們的創作提供源源不絕的養份。2014年，Todot Design 創立了產品設計品牌ULTRAWORKS，通過結合前衛的設計語言與新鮮的意念，為大家帶來獨特的產品體驗。
Todot Design is a multi-disciplinary design unit made up of members from Macau Region, Hong Kong Region, and Shenzhen. Our different cultural backgrounds provide constant inspirations for our creative works. In order to better implement the design philosophy of Todot Design, we established our own product design brand, ULTRAWORKS, in 2014.

CLIFFSSTUDIO

1.1A7-02(5)

Address: 澳门地区 Macao China Macau Design Centre Studio#14, 2F, Travessa da Fabrica No.5
Tel: 66694261
Email: info@cliffsstudio.com
Web: www.cliffsstudio.com

CLIFFS STUDIO於二零一五年成立，是一間專注處理3D影像的多媒體製作公司。團隊致力用新穎，大膽的手法製作優質的創作影像。過往多次參與製作品牌廣告、影視後期、全息投影、光影裝置和三維產品打印開發等項目。曾參與製作世界杯2018海信電視廣告，時代華納旗下Cartoon Network <<We Bare Bears>>合作產品廣告等。近年亦獲得GDC 2017兩項優異獎和A’Design Award & Competition的金獎，銅獎和亞軍。
CLIFFS STUDIO was founded in 2015. It is a multimedia production company that specializes in 3D animation. We are dedicated to create quality video productions images with innovative and bold attitudes. We have participated in various projects including brand advertising, post-production, hologram, projection mapping 3D print and so on.

匠心設計有限公司 / MASTER PIECES LIMITED

1.1A7-02(6)

Address: 澳门地区 南灣大馬路371號京澳大廈5樓A Macao 371 Av. Da Praia Grande, Keng Ou Building, 5 Andar A, Macau
Tel: +853 28322971
Email: alanng@mpd.com.mo
Web:

匠心設計是以室內建築為基礎的跨專業的設計公司，我們公司從事的項目範圍廣泛，從主要的住宅和商業空間到景觀，視覺效果和定制傢俬。匠心設計在澳門提供設計及裝修服務我們的服務內容有室內規劃，通過項目的所有方面進行概念和綜合設計，包括：設計規劃，原視圖，概念和施工，專業空間及平面設計，建築細節及傢具設計等等。
Masterpieces provides design and build services in Macau. we offers interior planning, conceptual and comprehensive design through all facets of the project including; programming, schematic, development and construction with disciplines in space and floor plan design, computer renderings, construction details and furniture design.

AWAKENING INTERNATIONAL LIMITED

1.1A7-02(7)

Address: 澳门地区 GuangDong-Macau-澳門聖美基街14A地下 Macao GuangDong-Macau-Rua de Miguel, 14A
Tel: 0085366614121
Email: lucas.lei@onemanbandcreation.com
Web:

上行國際有限公司（Awakening International Ltd.）是基於互聯網「大數據+品牌塑造+精準行銷」的必然發展趨勢而創立。成立之前，其主創人員已在「社交媒體市場行銷」、「影響力行銷」和「品牌視覺傳達」三個領域，擁有了豐富的成功經驗，成功將來自全球各地的上百款的品牌及產品打造成為港澳臺三地市場爆款。創始人李文諾博士為澳門連續創業家，2019大灣區十大青年領袖，2015及2018兩屆「青年企業家大獎」得獎人。

魔法師科技有限公司

1.1A7-02(8)

Address: 澳门地区 Macao China 澳門-商業大馬路財富中心五樓
Tel: +85366851020
Email: jason@morpheus.com.mo
Web: www.morpheusideas.com

魔法師科技有限公司是一家集多媒體互動、設計、IT、動漫於一體的多領域綜合性企業，擁有多年在多媒體互動應用開發累積的經驗和強大的美術後期團隊，多次與港澳地區及國內政府部門和企業達成友好的合作關係。魔法師科技配合當前迅速變化的數字環境，通過積極研發新數字媒體，為客戶提供包括展覽展示、品牌推廣、互動教育以及大型投影等各類綜合性數字媒體建設，給某一行業呈現全新的解決方案及提供技術和藝術上的創新。

棋人娛樂製作有限公司 / Chessman Entertainment Production Co ltd.

1.1A7-02(9)

Address: 澳门地区 澳門-澳門-澳門新口岸北京街廣發商業中心9樓AB Macao Macau-Macau-R.de Pequim, Edf. Com. Kong Fat. 9/AB, Macau
Tel: +853-28336266
Email: raiden@chessman.com.mo
Web: www.chessman.com.mo

棋人娛樂製作成立於2001年最初登記為棋人製作，及後於2003年正式登記為棋人娛樂製作有限公司，由經營藝人管理及娛樂製作開始，發展至音樂及影像製作、平面設計等範疇。
於2014年成立首個海外分支——棋人香港，主力發展廣告及藝人管理事務。2018年成立棋人葡萄牙，2019年成立棋人北京，期望拉近澳門與全球娛樂業界距離，並發展更多創意產品。
Based in Macau, Chessman Macau has established itself not only a production house but also a superior provider of stage entertainment production, artist management as well as film and video production since 2001.

株式会社HUBART / HUBART Inc

1.1A7-04

Address: 日本 东京-东京-涉谷区惠比寿一丁目11番2号 Japan Tokyo-Tokyo-3-11-2, ASAHI Building ,Ebisu Shibuya-ku
Tel: 03-5421-8203
Email: artfield@hubart.cn
Web: www.echigo-tsumari.jp

HUBART是一家以国际文化艺术交流为主旨的专业机构。作为日本越后妻有大地艺术节唯一授权的中国区域负责机构，开展越后妻有大地艺术节的宣传推广、版权代理、艺术项目组织等工作。同时，担当由国际策展大师北川富朗先生主持的北阿尔卑斯国际艺术节、奥能登国际艺术节、房总国际艺术节等多个艺术节的中国区推广。除此之外，HUBART还与北川富朗先生一道，发起了大地艺术节中国项目计划,致力于中国版大地艺术节的打造。
HUBART is an organization dedicated to international culture and art exchange. With exclusive authorization of the Echigo-Tsumari Art Triennale (ETAT) in China, HUBART is in charge of the promotion, copyright matters and art projects of ETAT and other art festivals directed by Mr.Fram Kitagawa in Suzu, Omachi & Ichihara. Along with Mr. Kitagawa, HUBART also launched an Art Triennale in China.

株式会社荒井工房 / ARAI Co.,Ltd

1.1A7-05

Address: 日本 山形县-上山市-山形县上山市金谷字下河原1386 Japan Yamakata-Kaminoyama-1386,Kanaya
Tel: 023-672-3319
Email: z13611802142@qq.com
mail@araikoubou.com
Web: www.araikoubou.com

荒井工房成立于1972年，是一家主要以高级全手工制作铁壶及铸铁器产品的生产商。总部设在日本山形县上山市。我公司的产品代表日本，多次受邀参加世界各国举办的日本传统文化展。公司今年来除高级铁壶制品外，更拓展了高级手工陶瓷器，工艺品及厨房用品。铁壶产品兼具收藏性与实用性，备受各界人士的推崇和喜爱。
We are casting campany. Our company was established in 1972. We produce handmade iron kettle mainly,it Based on an expert high technique, and thanks to you all,we get a high evaluation. We are consistent by a design,model production, the coloration,finish,all processes. In addition, we meet the wide variety of customer's needs, and we offer a original and a high quality products.

东瀛假日旅行社

1.1A7-06

Address: 日本 Japan 中央区-大阪市-大阪府
Tel: 06-6634-1248
Email: m.tanaka@jph.co.jp
Web: www.jph.co.jp

我们是访日旅游的专门公司。主要以中国为主，也对来自亚洲各国的团体访日游客进行日本的旅行计划，安排，旅行管理等相关业务。
另外，我们为了逐渐扩大的个人访日旅游项目，在国内各大旅行社网站设有团体以及个人的访日旅行计划，方便客人的多元化需求。

伊朗阿利亚纳 / ARYANA

1.1A7-08

Address: 伊朗 伊朗-伊朗-Tehran. Azadi st. Between yadegar and azadi Iran Tehran. Azadi st. Between yadegar and azadi
Tel: 0086+021-62867811 / 021-62867811
Email: 1692210390@qq.com
Web:

株式会社Alexanderandsun / ALEXANDER AND SUN CO.LTD

1.1A7-09

Address: 日本 東京都新宿区新宿5丁目17番11号 白凤大楼8F Japan HAKUHO Bidg 8F 5-17-11 Shinjyuku-Ku, Tokyo 160-0022
Tel: 86-03-5291-1605
Email: zhoubin@alexanderandsun.com
Web: alexanderandsun.sakura.ne.jp/hp

本公司创立于1978年，发展至今已有40余年辉煌历史，公司总部设立于东京都新宿区，旗下拥有免税店业务、观光巴士业务、酒店业务等。以成为访日旅客不可欠缺的企业为目标，让每一位访日旅客展开笑颜。
The company was founded in 1978 and has a brilliant history of over 40 years. Its headquarter is located in Shinjuku, Tokyo. Our business scope includes：tax-free stores, tourist bus, hotel, etc. To be an indispensable partner of visitors to Japan is the goal of the company. We'd love to make every visitor have a pleasant journey in Japan.

淡水河谷 / Vale

1.1A7-10

Address: 巴西 RJ, -Rio de Janeiro, -Praia de Botafogo, 186, 15º andar, Botafogo, Brazil RJ, -Rio de Janeiro, -Praia de Botafogo, 186, 15º andar, Botafogo 22250-145
Tel: 010-65052721
Email: CIIE@vale.com
Web: www.vale.com

淡水河谷总部位于巴西里约热内卢，业务遍布世界五大洲，是全球市值最高的金属和矿产品公司之一。淡水河谷是世界上最大的铁矿石和球团矿生产商，也是世界上最大的镍生产商，我们同时还生产锰矿石、铁合金、冶金煤和动力煤、铜、铂族金属、金、银和钴。
Headquartered in Rio de Janeiro, Brazil and present in 5 continents, Vale is one of the largest metals and mining companies in the world based on market capitalization. We are the world's largest producer of iron ore, iron ore pellets as well as nickel. We also produce manganese ore, ferroalloys, metallurgical and thermal coal, copper, platinum group metals, gold, silver and cobalt.

Amcham Shanghai

1.1A8-01

Address: 美国 United States of America Delaware-Wilmington-1209 N. Orange Street
Tel: 62797119
Email: AmCham@amcham-shanghai.org
Web:

上海美国商会被称为在华“美国商业之声”，是亚太地区规模最大的美国商会之一。商会成立于1915年，是第三家设立于美国境外的美国商会。作为一家非盈利性、中立、商业组织，上海美国商会致力于自由贸易政策，市场开放，私有企业和信息的自由流通。
上海美国商会的使命是努力通过提供高质量的商务信息与服务，政策游说支持及丰富的商业联系与交流，为会员的成功经营以及美中商贸关系的增进提供支持与帮助。
AmCham Shanghai, known as the "Voice of American Business" in China, is one of the largest American Chambers in the Asia Pacific region. Founded in 1915, we are the third American Chamber established outside the United States.

Dubai Chamber of Commerce and Industry

1.1A8-02

Address: 阿联酋 United Arab Emirates Dubai-Dubai-Baniyas Road, Deira P.O. Box 1457
Tel: +86 21 80337591
Email: jiameng.zhuo@dubaichamber.com
Web: www.dubaichamber.com

Dubai Chamber of Commerce and Industry was established in 1965 by royal decree. It's a non-profit public organisation whose mission is to represent, support and protect the interests of the business community in Dubai as well as to promote Dubai as an international business hub by supporting the development of business. Dubai Chamber's membership grew to 231,000 companies in 2018.

世界贸易中心协会 / WORLD TRADE CENTERS ASSOCIATION

1.1A8-03

Address: 美国 纽约-纽约-百老汇大街120号3350室 United States of America New York 10271-New York-120 Broadway, Suite 3350
Tel: 0086 10 8535 3888
Email: cory@wtcharbin.com
Web: www.wtca.cn
www.wtca.org

世界贸易中心协会（简称WTCA）成立于1970年，致力于全球各地世界贸易中心的建立和有效运营，并以此促进地区经济发展、助推国际贸易和投资。全球网络包括近90个国家和地区的300多个世界贸易中心，向成千上万的企业会员和客户提供服务，帮助他们开拓货源、增加客源并提升投融资机会。
Founded in 1970, the World Trade Centers Association (WTCA) is dedicated to the establishment and effective operation of World Trade Centers (WTCs) as instruments for the global expansion of trade and investment. WTCA's vast network is formed by members in more than 300 cities in nearly 90 countries.

Scandinavian Airlines System

1.1A8-04

Address: 瑞典 Sweden Sweden-Stockholm-Frosundaviks Alle 1, Solna
Tel: +86 10 8527 6100
Email: corporate.cn@sas.dk
Web: www.flysas.cn

北欧航空公司是北欧领先的航空公司，成立于1946年。北欧航空公司的班机往返于斯堪的纳维亚半岛、欧洲、美洲、亚洲的100多个目的地。目前北欧航空在中国运营的航班有：每日一班由北京直飞丹麦首都哥本哈根；每日一班由上海直飞哥本哈根；每周五班由香港直飞哥本哈根。
Scandinavian Airlines is Northern Europe's leading airline founded in 1946. SAS flies more than 100 destinations within Scandinavia, Europe, the U.S. and Asia. Currently, SAS offers daily flights from Beijing and Shanghai to Copenhagen, 5 weekly flights from Hong Kong to Copenhagen.

福冈市港湾空港局(博多港)

1.1A8-06

Address: 日本 Japan FUKUOKA-CITY-HAKATA-KU-12-1 OKIHAMA-MACHI
Tel: 81-92-282-7125
Email: butsuryu.PHB@city.fukuoka.lg.jp
Web: port-of-hakata.city.fukuoka.lg.jp/index.ph

福冈市，不但有天海一色的自然风光，更有大城市的繁华景象，在漫长的历史中孕育出的传统文化，使整个城市洋溢着独有的风光和魅力。近年来，日本的人口出生率不断下降，在此情况下,福冈市人口却每年增长1万人以上，2016年7月突破155万人。由福冈市政府管理的博多港，历史悠久，早在两千年以前，就同亚洲大陆开始贸易往来，它是作为福冈同亚洲大陆的贸易据点而逐渐繁荣起来的港口，为福冈市如今的繁荣发展，作出了积极的贡献。

fijiairways

1.1A8-07

Address: 斐济 Fiji oceania-NADI-The Hanger, Maintenace and Administration Centre. Nasoso Road, Nadi Airport
Tel: 63758385
Email: louise.huang@fijiairways.com
Web: www.fijiairways.com/zh-cn

Fiji Airlines routes cover 23 destinations in 13 countries, using Fiji's Nandi Airport as a transit port. Our route is unparalleled. Fu you cross the Pacific Ocean and enjoy the exotic islands of Australia, New Zealand, the United States and the Pacific. Visitors from Asia can feel our dirty class when you take off from your plane.

斯瑞斯蒂假日公司 / Shristy Holiday PVT.LTD.

1.1A8-08

Address: 泊尔 加德满都-加德满都-嘉瑞达拉 Nepal Kathmandu-Kathmandu-Gairidhara
Tel: 010-83918921
Email: Zhwei@norinco.cn
Web: www.shristiholidays.com

斯瑞斯蒂假日是一家旅行服务公司，总部在尼泊尔加德满都，由尼泊尔政府，文化、旅游和民航部共同认证。
斯瑞斯蒂假日由多家成员组成，服务领域涵盖酒店管理、航空票务、文化服务、旅游资源等。有资质、有经验的团队会让您在尼泊尔的旅行成为一次难忘的经历。
公司设计了多款旅行产品，专业团队为您提供从抵达到离开的一条龙式服务，还可以根据您的喜好和要求，进行旅行计划私人订制。
Shristi Holidays' Pvt.Ltd is a service-oriented company based in Nepal. We are a registered company and recognized by the Government of Nepal, Ministry of Culture, Tourism and Civil Aviation. We are formed by a group of entuhsiastic member associates from different fields of Tourism to handle all sorts of travel requirements.

DUMA LOGISTICS CO.LIMITED

1.1A8-09

Address: 肯尼亚 Kenya NAIROBI-NAIROBI-ROAD C, BUILDING: GD23, 209/20272
Tel: +254716979464
Email: nicke@amanbo.com
Web: www.amanbo.co.ke

DUMA物流专业服务中非进出口商及物流服务商的新型互联网物流平台。依托AMANBO电商平台团队20年非洲进出口贸易基础以及网络平台研发和运营经验，dumaex.com为中非物流企业搭建了一个数字化物流服务空间，同时为非洲产品出口商提供产品供应链服务、中非物流解决方案定制服务（提供从海运、空运、清关到集货仓、海外仓、落地配、快递自提点等物流服务）及非洲产品在中国区域的线上线下展示及销售服务。
DUMA Logistics is a new model Internet logistics platform company registered in Kenya. It is a China-Africa importers and exporters in logistics service provider. It Depends on AMANBO e-commerce platform team's with 20-year of experience in African import and export trade foundation rich in experience of research and development of operations in network platform.

墨功文化有限公司 / INK CULTURE LIMITED

1.1A8-10

Address: 香港地区 香港-香港九龙新蒲岗大有街32号泰力大厦 Hong Kong FLAT 6, 8/F LAURELS IND CTR 32 TAI YAU ST SAN PO KONG KLN HONG KONG
Tel: +852 35280799 / +852 3528 0799
Email: rosy@tyegroup.com
Web: www.ink-culture.com

墨功文化有限公司成立于2018年，是以研发和制作数字水墨动画为目标、同时兼顾其他影视节目制作及发行的专业公司.建基于香港,背靠中国大陆,面向国际。公司由一群专业的动漫制作人、市场推广和管理人员组成，致力经营影视制作、动画制作、发行以及动漫衍生产品授权等业务。
Launched in 2018, Ink Culture was founded with an aim of building a distinctive ink wash animation brand. We also concentrate on producing and distributing other TV series and films. As a Hong Kong-based, supported by Mainland China company, we intend to promote our works to the international market. Our team consists of a group of professional animation makers, marketing people and the managemen.

BNW GLOBAL TRADING

1.1A8-12

Address: 马来西亚 Malaysia PULAU PINANG-55-11C,MENARA NORTHAM,JALAHSUCTAN AHMAD SHAH
Tel: +6012-4867006
Email: 294798547@qq.com
Web:

BNW GLOBAL TRADING WAS FOUNDED BY MR BRANDON WEE HONG JIE IN THE YEAR OF 2016 IN THE LAND OF PENANG,PEARL OF ORIENT,WEST MALAYSIA.

Earth Adventure Pty Ltd

1.1A8-13

Address: 澳大利亚 Australia South Australia-Adelaide-36 Provident Avenue, Glynde
Tel: +61 8 81652024
Email: rod.quintrell@venture.net
Web: www.earthadventure.com.au www.earthadventure.cn

Earth Adventure has been providing adventure programs from Australia for 20 years. Our Mission is to deliver programs world-wide which are unique, exciting, safe and facilitate powerful learning outcomes. We utilise outdoor settings to gain better understanding of ourselves; improve our relationships with others and the outdoors. We are part of Wilderness Escape Outdoor Adventures.

全球商品博覽匯 / 全球商品博覽匯(IMX)

1.1B1-01

Address: 香港地区 香港-香港-湾仔区湾仔港湾道18号中央广场67楼6701室 FLAT/RM 6701,67/F CENTRAL PLAZA 18 HARBOUR ROAD WANCHAI
Tel: 15802193416
Email: he.jingjin@kjt.com
Web: www.imx-china.com

全球商品博览汇IMX，为全球高品质商品进入中国市场提供一站式B2B服务，帮助海外企业尤其是中小企业精准对接国内合作伙伴，是中国首批“6+365天”进口商品常年展示交易平台。
IMX, is a one-stop B2B service platform for global commodities to enter into Chinese market. IMX focuses on facilitating top quality products worldwide, especially for SMEs to meet the ever-increasing demand by the Chinese population. It's a recognized “6+365” days Permanent Exhibition and Trade Platform for the CIIE.

Softtech

1.1B1-02

Address: 土耳其 Turkey Istanbul -Sariyer-Resitpasa Mah. ITU Teknokent ARI-3 No:4
Tel: +8618616656005
Email: onur.yavuz@softtech.com.tr
Web: softtech.com.tr/en/homepage

Softtech is the technology subsidiary of IsBank in Turkey, which is one of the world's top 10 strongest banking brands by Brand Finance. Headquartered in Istanbul, Softtech operates in 9 different locations. The firm has more than 1000 employees globally and develops software products and services in sectors such as finance, retail, healthcare & medical, insurance, logistics, and agriculture.

KCB BANK KENYA LIMITED

1.1B1-03

Address: 肯尼亚 Kenya NAIROBI-NAIROBI-P. O. BOX 48400 - 00100
Tel: +254 20 3270298
Email: pkiio@kcbgroup.com
Web: www.kcbgroup.com

KCB Bank Kenya Limited is licensed by the Central Bank of Kenya as a commercial bank and is a wholly owned subsidiary of KCB Group Plc. which is a non-operating holding company. KCB Group is a regional banking and financial services group with operations in Kenya, Uganda, Tanzania, South Sudan, Rwanda, Burundi and Ethiopia.

埃及银行 / Banque Misr

1.1B1-04

Address: 埃及 开罗穆罕默德法里德街151号 Egypt 151, Mohamed Farid Street - Cairo
Tel: 020-37392584
Email: Rongh@banquemisr.com
Web: www.banquemisr.com

Banque Misr was established in 1920 as the first wholly Egyptian - owned bank.Banque Misr’s role is visible in all economic fields due to its geographic outreach. The bank has about 14,500 employees, serving a large base of more than eight million clients in Egypt, with a total paid-up capital amounting to EGP 15 billion.

科威特国民银行 / National Bank of Kuwait

1.1B1-05

Address: 科威特 科威特城-Abdullah Al-ahmed Street P.O.Box:95,Safat Kuwait Kuwait City-Abdullah Al-ahmed Street P.O.Box:95,Safat
Tel: 18930589550
Email: will.yao@nbksh.com.cn
Web: www.nbk.com

科威特国民银行成立于1952年，是海湾地区第一家本土私营股份制银行，也是科威特最大的银行，总资产超过900亿美元，是唯一在科威特同时涉足商业银行及伊斯兰银行领域的银行。我行连续十三年获评为世界前50名最安全银行、同时也多次获评为中东地区最佳银行。目前我行业务覆盖地区包括：科威特、纽约、伦敦、巴黎、新加坡、日内瓦、上海，阿拉伯联合酋长国、沙特、巴林、埃及、约旦、黎巴嫩、伊拉克、土耳其。我们成立于1952年，是海湾地区最大的银行之一，总资产超过900亿美元。作为科威特唯一一家同时提供商业银行及伊斯兰银行服务的金融服务机构，我们连续十三年获评为世界前50名最安全银行,同时也多次获评为中东地区最佳银行。目前，我们通过在科威特、上海、纽约、伦敦、巴黎、新加坡、阿联酋、沙特、巴林、埃及、约旦、黎巴嫩、伊拉克及土耳其的业务网络及分支机构为全球客户提供广泛的金融服务。

埃及国民银行 / National Bank of Egypt

1.1B1-06

Address: 埃及 开罗-1187 Corniche Elnil Egypt Cairo-Cairo-1187 Corniche Elnil
Tel: +8621-68861889转8000 / +8621-68861889*8000
Email: Wael.saad@nbechina.com
Web: www.nbe.com.eg

埃及国民银行是埃及历史最悠久的商业银行。它成立于1898年6月25日，在20世纪50年代，埃及国民银行承担了中央银行的职责。在20世纪60年代实行国有化后，它除了在中央银行没有分行的地区履行中央银行的职能外,还充当了一家纯粹的商业银行。埃及国民银行上海代表处于1999成立，并于2008年建立上海分行。
NBE is the oldest commercial bank in Egypt. It was established on June 25, 1898. During the 1950s, NBE assumed the central bank's duties. After its nationalization in the 1960s, it acted as a pure commercial bank besides carrying out the functions of the central bank in the areas where the latter had no branches.

德益世国际商业保理有限公司 / Tradewind GmbH

1.1B1-07

Address: 德国 北莱茵-威斯特法伦州-门兴格拉德巴赫-Flughafenstraße 83 Germany Nordrhein-Westfalen-Mönchengladbach-Flughafenstraße 83
Tel: 86 21 60319919*803
Email: a.wang@tradewindfinance.com
Web: www.tradewindfinance.com

德益世国际保理成立于2000年，总部设在德国，在全球13个国家设立了超过20个分支机构，客户遍布30余个国家，在国际贸易融资领域处于领先地位。如今，德益世能够利用其强大的国际实力、可靠的专业技术和丰富的行业经验为多个行业的企业提供定制化贸易融资服务，包括纺织服装、食品饮料、水产、电子、汽车、化工产品和消费品等行业。
Founded in 2000, with more than 20 offices in 13 countries including our headquarters in Germany, and clients in over 30 countries, Tradewind is at the forefront of international trade finance. Today, we provide customized trade finance solutions to a variety of industries including apparel & textile, food & beverage, seafood, electronics, automotive, chemical and consumer goods, among others.

ALLINPAY FINACIAL HOLDINGS COMPANY LIMITED

1.1B1-08

Address: 香港地区 HongKong China Unit C. 15/F., KingPalace Plaza 55 King Yip Street, Kwun Tong, Kowloon
Tel: (852) 3612 9737
Email: leo@allinpayhk.com
Web:

通华金融控股有限公司（简称为“通华金控”），位于香港，成立于2012年，是通联支付在香港的分支机构，专门为香港和澳门地区提供全方位的金融服务。通华金控已在香港获得MSO牌照以及各卡组织的收单资格——香港收单牌照包括：银联、万事达、VISA、大来；二维码受理包括：微信、支付宝。为满足香港本地人和当地组织机构的日常消费需求，以及学生和旅客的支付需求，通华金控主要的业务是当地银行合作开展收单业务、预付卡受理服务、在线支付及O2O互动营销服务等。

Brain Key Group (Asia) Limited

1.1B1-10

Address: 香港地区 九龙观塘成业街6号泓富广场8楼808室 Hong Kong Rm.808,8/F, Prosperity Place,No.6 Shing Yip Street, Kowloon, H.K.
Tel: 00852-54254288
Email: ann.yang@brain-key.cn
Web: www.brain-key.cn

我司Brain Key Group（Asia）Limited 2017年成立于中国香港，公司运用全球思维，植根中国，致力于为中国的企业客户提供日本OEM生产加工，品牌经营梳理，货品整合，企业合规经营，知识产权，进出口流程及销售渠道架设等相关专业服务。主要涉及的产品版块为化妆品、营养型食品、日用品等。让客户实现自有品牌的日本制造的高质量体系化，产业升级化，链路全管理化是我们的述求。
Brain Key Group（Asia）Limited based in Hongkong. With the global concept and focus on China market. We committed to providing Japan OEM, compliance, IP rights, I&E process and others. The main products are cosmetics, nutritional food, daily necessities, etc. Our goal is to enable our customers to have the high quality systemization, industrial upgrading under their own brands.

National Cargo Services Inc.

1.1B1-11

Address: 美国 United States of America B.C.-Richmond-13951 Bridgeport Road Richmond, B.C. V6V 1J6 Canada
Tel: +1 604 232 9223
Email: jim.z@nationalcargo.ca
Web: www.nationalcargo.net:8086/ www.nationalcargo.ca:8086

Total 55000SQF customs bonded warehouse found in 1998, we dedicate to provide Deconsolidation, Distribution, Transportation services in Great Vancouver area. We have a full range of cutting-edge equipment and facilities located near the ports, airports, and railways, very convenient. We provide you one-stop supply chain solution by professional integrated services in Canada.

联怡(香港)有限公司 / ETERNAL ASIA (HK) LIMITED

1.1B1-12

Address: 香港地区 HongKong China 香港新界沙田安耀街3号汇达大厦6/22F
Tel: 010-51656363
Email: ke.huang@eascs.com
Web:

专业提供全程一体化供应链服务，业务领域覆盖快消、IT、通讯、医疗、家电、工业原材料、服务等行业，与国内外2000多家知名品牌商合作，服务平台遍布中国320个主要城市（包括香港地区）和东南亚、欧美等10多个主要国家及地区。

新景程(香港)有限公司 / VIEWTRANS (HK) CO., LIMITED

1.1B1-13

Address: 香港地区 香港-九龙尖沙咀麼地道61号，冠华中心1楼2室 Hong Kong Hongkong-UNTI(SH)2 LG 1,MIRROR TOWER 61 MODY ROAD ,TSIM SHA TSUI,KL
Tel: 021-33013212
Email: wanglei@newtrip.biz
Web:

新景程（香港）有限公司的核心业务包括以下三大板块：物流板块可提供从境外到中国的海运、空运、铁路、公路的运输服务，尤其是以泰国、缅甸、菲律宾等东南亚国家为强项;旅游板块以国际旅游观光，户外徒步、骑行、滑雪和青少年国际研学活动为主，尤其是以英国、澳大利亚、加拿大、日本和中亚五国为见长；英国留学教育服务板块是英国私立寄宿学校入学中心（UKBS）的主要合作方之一，以提供英国中学的入学服务为主。
The core business of VIEWTRANS has 3 sections:1)Providing sea & air,railway & road logistics services from ASEAN Countries like Thailand,Myanmar & Philippine to CHINA.2) Travel agency section mainly focusing on outdoor hiking,riding,sking & International tourism to the UK,Australia,Canada,Japan & Central Asia for the youngsters.3)As one cooperator of UKBS for UK middle school study abroad services.

WINHIGH ENTERPRISES CO.,LIMITED

1.1B1-14

Address: 塞舌尔 Seychelles Mahe-Victoria-Oliaji Trade Centre–1 st Floor, Victoria, Mahe, Seychelles
Tel: 021-80168296
Email: guolu@sinoif.com
Web: www.sinoif.com

永高企业有限公司，于2015年在塞舌尔成功注册并经营，是一家为个人、公司及机构客户提供高质量的国际贸易咨询及信息增值服务的全球性公司。作为信息咨询服务公司，面向中国的贸易服务平台，主要提供贸易相关的跨境贸易金融服务及综合金融战略咨询服务，为促进中非贸易往来贡献一份力量。
Registered and operated in Seychelles in 2015, WINHIGH is a global company providing individuals, companies and institution customers with high quality international trade consultation and information value-added service. WINHIGH faced to China’s trade service platforms, it mainly provides cross-border trade finance service related to trade and Integrated financial strategy consultation service.

WEIMING INTERNATIONAL TRANSPORTATION(HK)LTD

1.1B1-15

Address: 香港地区 HongKong China RM.1201, 12/F., BUPA CENTRE,141-143 CONNAUGHT ROAD WEST, HONGKONG
Tel: +852 28587038
Email: weimghk@neivigator.com
Web:

韦铭成立于1997年5月，韦铭致力于为客户提供高质量的第三方物流运输服务，提供包括配送、国际储运、报关等一整套物流增值服务。
韦铭致力于为客户提供高质量的第三方物流运输服务，提供包括配送、国际储运、报关等一整套物流增值服务，通过对客户提供高效、低成本物流服务，使客户能集中资源于核心业务，以最佳的基础投资和快速、灵活的应变能力进入市场。

A.L.C. Asia Logistics + Consulting GmbH

1.1B1-16

Address: 德国 Germany DEUTSCHLAND-LIMESHAIN-Neuhausstrasse 12a
Tel: ++496048981030
Email: frankfurt@alc-logistics.de
Web: www.alc-logistics.de

A.L.C. Asia Logistics + Consulting GmbH provides different quality services in logistics, trading and consulting. A.L.C. is also an established trading agency for different products "Made in Germany" - manufactured by well-known German brand producers (partly exclusive distribution in P.R.China).

天職澳門會計師事務所 / Baker Tilly Macao Certified Public Accountants

1.1B2-01(01)

Address: 澳门地区 宋玉生廣場263號中土大廈6樓M及N座 Macao Alameda Dr. Carlos D'Assumpçào No. 263,Edificio China Civil Plaza, 6 andar M & N, Macao
Tel: 00853-28703338
Email: alex@bakertillymacao.com.mo
Web: www.bakertilly.mo

天職澳門會計師事務所為全世界第八大會計及商業顧問網路「天職國際」在澳門唯一的會員，透過本集團之網路致力提供全球性優質的顧問服務，並深獲一百多個國家之專業及服務團隊成員的參予及支持。於1999年成立，於「核數師暨會計師註冊委員會」註冊並頒獲專業執照的會計師及商業顧問事務所。
Baker Tilly Macao was established in 1999 by a group of local veteran professional accountants and it is a registered audit firm with a valid practicing certificate issued by the Committee for the Registry of Auditors and Accountants.

至善有限公司 / PERFECTION COMPANY LIMITED

1.1B2-01(02)

Address: 澳门地区 Macao China 友誼大馬路918號世界貿易中心6樓A/B座
Tel: +853 28783808
Email: v.zhou@perfeicao.com
Web:

PERFECTION COMPANY LIMITED provide translation services, investment consulting, import and export trade, entrepot trade, brand marketing, event copywriting services, typesetting and printing, questionnaires and research services.

澳大利亚亚特兰投资公司 / ATLANTIC INVESTMENT(AUST)PTY LTD

1.1B2-02

Address: 澳大利亚 Australia SUITE 224,585 LITTLE COLLINS STREET. MELBORNE VIC3000
Tel: 198 6263 5492
Email: 2321274193@qq.com
Web:

澳大利亚亚特兰投资公司，立足澳中基础贸易与服务贸易行业。伴随着行业的触网升级，由传统一般贸易，转型为一般贸易与跨境电商并存，公司率先在行业内深耕。第二届进博会上，我们分享:教育培训服务/海外仓及货代服务/保税物流园区招商服务/行业协会服务。
特别是引进海外自然疗法营养健康管理研究成果及知识，进口以海外自然疗法理论为基础而研制的营养膳食补充剂。开办《中西方自然疗法研究机构》，向全国市县区招募合伙人。

DENBA CO.,LTD

1.1B2-03

Address: 日本 Japan Tokyo-Chiyodaku-Kandanishikicho Meitetsufudousan Takebashi Bldg 5F
Tel: 0573—88223259
Email: tenjikai@denba.co.jp
Web: www.denba-global.com

DENBA Technology 创造了一种保持食品鲜度，冷冻和解冻的新常识，并建立了保持新鲜度的革命性标准。从生产商到最终用户，我们一直为冷链业界的所有客户提供优质的解决方案，服务等。我们利用DENBA水分子活性化技术，投入研究以促进人类健康，与美容的新产品。并成功研发出DENBA HEALTH。渗入健康，美容和医疗产业，我们将继续努力追求最高的，品质、技术和安全性，成为人生100年时代的生活伴侣。
Headquartered in Tokyo, Japan, DENBA Co., Ltd is a leading global provider of preservation solutions. It has been awarded global patents and is widely used in food manufacturing, cold chain logistics, supermarkets, cold storage, catering and healthcare. The business covers Japan, China, Taiwan region, South Korea, Southeast Asia, America, Europe, Middle East and other regions.

普华永道 / PwC

1.1B3-01

Address: 英国 United Kingdom London-London-7 More London Riverside
Tel: 021-23233707 / 021-23232744
Email: christine.y.chen@cn.pwc.com
Web:

普华永道是全球领先的专业服务机构，秉承“解决重要问题，营造社会诚信”的企业使命。我们各成员机构组成的网络遍及158个国家和地区，有超过25万名员工，致力于在审计、咨询及税务领域提供高质量的服务。如有业务需求或欲知详情，请浏览www.pwc.com。
At PwC, our purpose is to build trust in society and solve important problems. We' re a network of firms in 158 countries with more than 250,000 people who are committed to delivering quality in assurance, advisory and tax services. Find out more and tell us what matters to you by visiting us at www.pwc.com.

Marubeni Corporation

1.1B3-02

Address: 日本 Japan Tokyo-Tokyo Nihombashi Tower, 7-1, Nihonbashi 2-chome, Chuo-ku, Tokyo
Tel: +86-21 68411932 /224
Email: Gao-Q@marubeni.com
Web: www.marubeni.com/en

丸红株式会社创立于1858年，至今已有160多年历史，是日本具有代表性的大型综合商社，经营项目众多，横跨食品、造纸、化学、能源、金属、钢铁、设施设备、船舶、物流运输、金融、保险、不动产等诸多领域。

Miebach Consulting GmbH

1.1B3-03

Address: 德国 Germany Frankfurt am Main-60329-Untermainanlage 6
Tel: +86 021 62886375
Email: george.yu@miebach.com
Web: www.miebach.com

Miebach Consulting's industry-specific supply chain expertise spans across various industries. Our team of results-driven professionals design and implement projects in the areas of supply chain transformation, network modeling, facility layout and plant logistics, warehouse and operations management as well as automation for our clients.

Youxfort Holdings Group Limited

1.1B3-04

Address: 香港地区 HongKong China Hong Kong-Rm20, 10/F, Ocean Centre, 5 Canton Rd,Tsim Sha Tsui, KLN,
Tel: 37524195 / 98728659
Email: youxfort@gmail.com
Web:

煜丰控股集团有限公司是一家全球资产配置、国际投资、财税筹划和风险管理服务等综合专业服务公司。集团依托香港作为全球金融中心、国际资产管理中心及风险管理中心的法律制度、战略定位和区域发展等优势，致力于为大中华、港澳台地区及全球各国华人华侨高净值人士、家庭提供全球资产配置、全球移民、税务身份筹划、私人信托和家族基金搭建、海外不动产价值投资、名校精英留学、高端海外医疗、财税筹划和风险管理等一站式服务。

Laox CO., LTD

1.1B3-05

Address: 日本 Japan Tokyo-Minato-ku-2-7-17,Shiba
Tel: +81-3-6693-5485
Email: dai-g@laox.co.jp
yanggaoya@laox-sh.com
Web: www.laox.co.jp

Laox乐购仕株式会创立于1930年，2009年起并入苏宁集团旗下，是日本免税事业的先驱者；历经89年历史的发展，Laox乐购仕已经成为日本最大的免税连锁上市企业；在东京，大阪，北海道等商业圈有40多家门店，并与100多家知名品牌长期合作，在门店提供多国语言服务，是90%海外游客的购物首选。

Priority Cargo Australia Pty Ltd.

1.1B3-06

Address: 澳大利亚 Australia NSW 2067-Chatswood-Suite 301, level 3, 11 Help St
Tel: 010-83512635
Email: Jjh@northexpo.com.cn
Web:

Priority Cargo Australia (PCA) is an Australian based and privately owned freight forwarder with a very strong presence in the Asia Pacific region. We provide flexible, comprehensive and efficient solutions to our highly valued clientele by combining industry knowledge, highly skilled personnel and close ties with industry suppliers including major Shipping and Air line.

Standard Chartered Bank

1.1B4-01

Address: 英国 United Kingdom London-London- 1 Basinghall Avenue, London, EC2V 5DD
Tel: +86 21 3896 3160
Email: Leo.Liu@sc.com
Web:

渣打是一家领先的国际银行，业务网络遍及全球60个最有活力的市场，为来自145个市场的客户提供服务。渣打网络与“一带一路”沿线市场的重合度达到近70%。渣打的使命是利用其独特的多样性促进商业繁荣和增进人类福祉。渣打的文化传承和企业价值都在其品牌承诺“一心做好，始终如一（Here for good）”中得到充分体现。

KPMG

1.1B4-02

Address: 瑞士 Switzerland 8036 Zurich-PO Box-KPMG AG, Raffelstrasse 28
Tel: 021-22122617
Email: yisa.wu@kpmg.com
Web: www.kpmg.com

毕马威是一个由专业服务成员所组成的全球网络。成员所遍布全球153个国家和地区，拥有专业人员207,000名，提供审计、税务和咨询等专业服务。1992年，毕马威在中国内地成为首家获准合资开业的国际会计师事务所，目前在21个城市设有23家办事机构，在这些办事机构紧密合作下，毕马威中国能够高效和迅速地调动各方面的资源，为客户提供高质量的服务。
KPMG is a global network of professional services firms providing Audit, Tax and Advisory services. KPMG China operates in 21 cities across China. With a single management structure across all these offices, KPMG China can deploy experienced professionals efficiently, wherever our client is located.

南非标准银行集团 / Standard Bank of South Africa Limited

1.1B4-03

Address: 南非 South Africa Gauteng-Johannesburg-30 Baker Street, Rosebank
Tel: 0027-11-3445623
Email: jane.he@standardbank.co.za
Web: www.standardbank.co.za

Standard Bank Group is the largest African banking group by assets, offering a range of banking and related financial services across sub-Saharan Africa. We have a 156-year history in South Africa, and started building a franchise in sub-Saharan Africa almost 30 years.

Commodities Intelligence Centre Pte. Ltd.

1.1B4-04(1)

Address: 新加坡 Singapore 501 Orchard Road #19-01 Wheelock Place Singapore 238880
Tel: +65-63038899
Email: weihsien.lee@cic-tp.com
Web: www.cic-tp.com

The Commodities Intelligence Centre (CIC) is a global eTrade platform for physical commodities including Metals, Chemicals & Plastics, Oil & Petroleum, and Agriculture Products, and is a JV between China-based ZALL SMARTCOM, GeTS and SGX to facilitate cross-border trade through deal matching, supply chain finance, cross-border logistics and global trade compliance through blockchain technology.

PSA INTERNATIONAL PTE LTD

1.1B4-04(10)

Address: 新加坡 Singapore SINGAPORE-SINGAPORE 119963-460 ALEXANDRA ROAD, #38-00 PSA BUILDING
Tel: 62794045
Email: SAMTAN@GLOBALPSA.COM
Web: www.globalpsa.com

作为全球领先的国际港口集团，PSA是全世界货运业者的诚挚伙伴。PSA的旗舰业务位于新加坡和安特卫普，在全球十八个国家拥有超过50座沿海、铁路和内陆码头。凭借多元化的全球团队所提供的深厚专业底蕴和丰富经验，PSA与客户及合作伙伴精诚合作，提供世界级的港口服务，探索创新货运解决方案，合作打造物流互联网。作为全球供应链的优选合作伙伴，PSA是“世界性的靠泊港”。更多信息，敬请浏览 www.globalpsa.com.

Allen & Gledhill LLP

1.1B4-04(11)

Address: 新加坡 Singapore One Marina Boulevard #28-00
Tel: +65 6890 7435
Email: huang.xuhua@allenandgledhill.com
Web: www.allenandgledhill.com

Allen & Gledhill (A&G) is an award-winning full-service Southeast Asian commercial law firm. Established in 1902, A&G is consistently ranked as a market leader in Singapore and Southeast Asia. With offices in Singapore and Myanmar, an associate firm in Malaysia, and an alliance firm in Indonesia, the A&G network has over 550 lawyers, making it one of the largest law firms in Southeast Asia.

PRESTIGE ACCOUNTING PTE. LTD.

1.1B4-04(12)

Address: 新加坡 Singapore SINGAPORE-60 Paya Lebar Road, #10-09 Paya Lebar Square
Tel: 63867157
Email: henrylu@prestige-ca.com
Web: prestige-ca.com

PRESTIGE GROUP是一间有着多年经验的本土会计咨询集团，为客户提供最广泛的专业服务。我们为尊贵的客户量身定制方案，并提供一站式服务，以满足所有类型的业务需求。我们的团队在新加坡的经商环境中具有丰富的经验，能够给予客户全面的商业咨询和建议。我们提供公司注册，投资咨询，财务，税务，审计，会计服务外包，公司秘书，薪酬管理，离岸公司，投资移民申请等专业服务。
PRESTIGE GROUP is a Singapore-based professional firm that provides borad range of professional services for start-up and SME to suit all kind of business needs and requirements. Our team has substantial experience and knowledge of Singapore's business environment to provide you with responsive and sound business advice.

CONSULTING GROUP - ASIA INSIGHT PTE LTD

1.1B4-04(13)

Address: 新加坡 Singapore SINGAPORE-1 KING GEORGE'S AVENU
Tel: +6567353788
Email: denise_kwok@asiainsight.com
Web: www.asiainsight.com

Asia Insight is an award winning market research consultancy with a unique blend of client-side strategic marketing experience. Delivering insights that guide our suite of global clients get ahead of competition and market disruptions across Asia Pacific. Translating Insights to Foresight, in Growth Strategy, Branding & Positioning, Performance Tracking, Innovation & Breakthrough etc.

Y3科技 / Y3 Technologies Pte Ltd

1.1B4-04(14)

Address: 新加坡 Singapore Singapore-Supply Chain City, 8 Bulim Avenue, #08-05, Singapore 648166
Tel: +65 6898 3296
Email: yvonne.wong@ych.com
Web: www.y3technologies.com

Y3科技成立于1981年，是业内领先的创新型供应链解决方案推动者，助推供应链产业数字化转型。经过38年的积累与沉淀，我们的客户遍及整个亚太地区，我们提供的供应链软件及方案应用于电商、零售、医药、快消、冷链、制造及第三方物流等行业
Y3 Technologies is a leading provider for future-proof supply chain solutions to both SMEs and MNCs throughout the Asia Pacific region for more than 38 years. Our solutions drive the digital transformation of the supply chain industry, empowering clients to get full visibility and insights to their business and make informed decisions.

叶水福集团 / YCH Group Pte Ltd

1.1B4-04(15)

Address: 新加坡 Singapore Singapore-8 Bulim Avenue, Supply Chain City, #08-01 Singapore 648166
Tel: (65) 6767 7777
Email: connect@ych.com
Web: www.ych.com

叶水福集团成立于1955年，现已发展成为新加坡最大的本土供应链解决方案供应商。作为亚太地区众多全球知名品牌的领先区域供应链合作伙伴，叶水福致力于采用业界最尖端的网络技术，加上屡获殊荣的专有端到端供应链解决方案，专注提高大小公司企业的生产力和可持续性。
以创新为理念和7PL™方法而闻名，叶水福将供应链战略与执行无缝集成，其强大分销网络也为在亚洲及其他地区扩展的公司提供具吸引力的价值。
Founded in 1955, YCH Group has evolved to be Singapore' s largest home-grown supply chain solutions provider. Being the leading regional Supply Chain partner to many global favourite brands across Asia Pacific, YCH focus on boosting productivity and sustainability with our proprietary award-winning end-to-end SCM solutions, using cutting-edge web technologies that are best-in-class.

国际电子贸易服务私人有限公司 / GeTS Asia Pte Ltd

1.1B4-04(16)

Address: 新加坡 Singapore 31 Science Park Rd, Singapore 117611
Tel: +65 68877333
Email: marketing@globaletrade.services
Web: globaletrade.services

Global eTrade Services (GeTS), a global leading trade platform company, is shaping the future of trade and supply chain with its innovative use of technology and deep G2B and B2B domain expertise. GeTS enables the orchestration of physical logistics, compliance and financial requirements of trade and supply chain seamlessly, smartly and securely, thus powering global trade by making it accessible.

Singapore Business Federation

1.1B4-04(17)

Address: 新加坡 Singapore Singapore-160 Robinson Road #06-01 SBF Center Singapore 068914
Tel: +6568276881
Email: jiawei.wong@sbf.org.sg
Web: www.sbf.org.sg

As the apex business chamber, SBF champions the interests of the business community in Singapore in trade, investment and industrial relations. SBF not only acts as the bridge between businesses and government to create a conducive business environment; But also represents the business community in bilateral, regional and multilateral fora for the purpose of trade expansion and business networking.

Muhr Asia Pte Ltd

1.1B4-04(18)

Address: 新加坡 Singapore Singapore-2 Kallang Avenue, #05-18
Tel: +65 6268 0270
Email: weihong.tan@panasian.com.sg
Web: www.muhr.com

Muhr Asia Pte Ltd is a JV between Muhr GmbH and Pan Asian Flow Tech Pte Ltd. The joint venture is responsible for manufacturing and distributing of Penstock, Stoplog, Hydromechanical & Screen in Asia.

SBC CORPORATE MANAGEMENT PTE. LTD.

1.1B4-04(19)

Address: 新加坡 Singapore 10 ANSON ROAD, #11-20 INTERNATIONAL PLAZA, SINGAPORE 229743
Tel: +65 6223 8268
Email: ARIESWONG@SBCINCORP.COM
Web: www.sbcincorp.sg

SBC Corporate Management Pte. Ltd is a professional corporate consultant and company formation company in Singapore and it is part of the SBC International Group ("SBC").
Since 1995, SBC has served and still maintains a client base of over 400,000 clients worldwide and every year we serve an additional 5,000 clients.

Vance Chemicals Pte Ltd

1.1B4-04(2)

Address: 新加坡 Singapore 24 Gul Lane
Tel: +65 68630863
Email: shirley@mr-mckenic.com
Web: www.mr-mckenic.com

Vance Chemicals is the sole manufacturer of the Mr McKenic range of products that clean, wash, disinfect, lubricate, polish and protect both at the workplace and at home.

SQUIRE MECH PTE LTD

1.1B4-04(20)

Address: 新加坡 Singapore 1 KALLANG JUNCTION
Tel: 63785533
Email: emilytan@squiremech.com
Web: www.squiremech.com

自1979年以来，思迈建筑咨询私人有限公司在新加坡和全球的建筑机电咨询服务和设计建筑开发领域不断发展壮大。由于知名房产开发商和权威机构都在寻求思迈的服务，因此思迈建筑咨询私人有限公司被公认为是机电顾问行业的领导者。
Since 1979, Squire Mech Pte Ltd has grown from strength to strength as a major force in the field of Mechanical and Electrical Engineering (M&E) consultancy services and design building development in Singapore and globally. Squire Mech is recognised as a leader, as major clients and authority bodies seek our services and representation.

雅诗柏建筑规划设计咨询有限公司 / RSP Architects Planners & Engineers

1.1B4-04(21)

Address: 新加坡 新加坡-1 Kallang Junction #03-01 Singapore Singapore-1 Kallang Junction #03-01
Tel: 021-62886862
Email: shanghai@rspchina.com
Web: www.rsp.sg

RSP Architects Planners & Engineers(PTE) LTD 成立于1956年，目前是新加坡最大最有实力的建筑 、结构专业设计事务所之一。RSP与其合作伙伴一起为全世界提供综合专业设计及顾问服务，服务范围包括建筑设计、城乡规划、城市设计、结构设计、机电设计，室内设计等等。
RSP Architects Planners & Engineers is one of the most established multidisciplinary practices in Singapore and the region. For over 60 years, the firm has delivered integrated and comprehensive solutions conceived through collaborative experience, capabilities in master planning, urban design, architecture, engineering and interior design, and broad experience across all typologies.

Singapore Airlines Limited

1.1B4-04(22)

Address: 新加坡 Singapore Singapore-25 Airline Road, Airline House
Tel: (8610)85131728 / (86) 5922075273
Email: Feifei_Wang@Singaporeair.com.sg
Mercedes_Chen@singaporeair.com.sg
Web: www.singaporeair.com/zh_cn/cn/home

Singapore Airlines (SIA) is a world-class international airline group. SIA is committed to the constant enhancement of the three main pillars of its brand promise: Service Excellence, Product Leadership and Network Connectivity. The world-famous Singapore Girl is now an iconic symbol of quality customer care and service.

HUA JIAN MACHINERY TRADING

1.1B4-04(23)

Address: 新加坡 Singapore SINGAPORE -68 SUNGEI KADUT STREET 1 SINGAPORE 72937
Tel: 6363 4500
Email: hua_jian68@hotmail.com
Web:

Hua Jian Machinery Trading is a manufacturer specialized in undercarriage parts manufacturing of excavators and bulldozers.Hua Jian Machinery is Import And export of machines parts/sale of machines parts.

World Marketing Group Pte Ltd

1.1B4-04(24)

Address: 新加坡 Singapore 45 Ubi Road 1 #05-04 Singapore 408696
Tel: +65-67449888
Email: JimHuang@wmg-group.org
Web: www.worldmarketing-group.com

World Marketing Group Pte Ltd
A 38 year old multinational enterprise with presence throughout the Asia Pacific region, providing various industry sectors with high quality, cost effective and environmentally-friendly Global Fulfillment Management and Last Mile Delivery Solution.
Headquartered in Singapore, we have a committed, experienced Cross Border Expertise team toservice clients from various.

DBS Bank Ltd

1.1B4-04(25)

Address: 新加坡 Singapore Singapore-12 Marina Boulevard, DBS Asia Central, Marina Bay Financial Centre Tower 3, Singapore 018982
Tel: 68789708 / +86 (186) 16830882
Email: cherylseow@dbs.com
ealsonshunxiqi@dbs.com
Web: www.dbs.com.

DBS is a leading financial services group in Asia with a presence in 18 markets. Headquartered and listed in Singapore, DBS is in the three key Asian axes of growth: Greater China, Southeast Asia and South Asia. The bank's "AA-" and "Aa1" credit ratings are among the highest in the world. DBS provides a full range of services in consumer, SME and corporate banking.

Pacific International Lines (Pte) Ltd

1.1B4-04(26)

Address: 新加坡 Singapore 140 Cecil Street, #03-00,PIL Building
Tel: +86 21 61235755
Email: vanessa.zhu@cn.pilship.com
Web: www.pilship.com

新加坡太平船务有限公司创立于1967年，是改革开放前最早进入中国航运市场的船务公司之一,也是东南亚地区最大的私人船务有限公司，目前在全球名列第九位。太平船务集团船队自有并运营集装箱船及多用途船近180艘，航线遍布全球100个国家500多个目的地。运载力达57万标准箱，包括干箱，冷藏箱和其他特种箱。

大华银行有限公司 / United Overseas Bank Limited

1.1B4-04(27)

Address: 新加坡 莱佛士坊80号，大华银行大厦 Singapore 80 Raffles Place, UOB Plaza
Tel: 021 6061 8579
Email: shermaine.cheesm@uobgroup.com
Web: www.uobgroup.com

大华银行有限公司（大华银行）是亚洲主要银行，拥有超过500间分行及办事处的环球业务网，分布在亚太、欧洲与北美的19个国家和地区。自1935年成立以来，大华银行通过自身发展和一系列的战略收购行动不断壮大。如今大华银行获评为世界顶尖银行之一：穆迪给予"Aa1"评级，标准普尔和惠誉分别给予"AA-"评级。在亚洲，大华银行通过新加坡总行和在中国、印度尼西亚、马来西亚及泰国的附属银行以及各地分行和办事处。
United Overseas Bank Limited (UOB) is a leading bank in Asia with a global network of more than 500 offices in 19 countries and territories in Asia Pacific, Europe and North America. Since its incorporation in 1935, UOB has grown organically and through a series of strategic acquisitions. UOB is rated among the world's top banks.

玮思康有限公司 / WESTCOM SOLUTIONS PTE LTD

1.1B4-04(28)

Address: 新加坡 Singapore 56 KALLANG PUDDING ROAD, HH@KALLANG #09-08
Tel: 69163626
Email: venie_yeo@westcomsolutions.com.sg
Web:

Westcom Solutions Pte Ltd (WCS) was established with the aim to conserve and improve the eco-green system environment and overall well-being. Our team is always committed to discover, updates and devoted to developing and producing a wide range of equipments and products from food waste recycling technology to water and bio-toilet technology.

BIPO SERVICE (SINGAPORE) PTE. LTD.

1.1B4-04(29)

Address: 新加坡 Singapore 120 Robinson Road, Level 6, Singapore 068913
Tel: 021-61392127
Email: rachel.han@biposervice.com
Web: www.biposervice.com

BIPO于2004年致力于从事人力资源服务业，之后发展成为国际化公司，全球总部设立于上海，BIPO同时也在香港地区、台湾地区、泰国、越南、日本、印度,澳大利亚和新西兰等国家和地区设立子公司，业务遍及亚太十多个国家和地区。

CRAFTSTONE INTERNATIONAL PTE LTD

1.1B4-04(3)

Address: 新加坡 Singapore 37 SUNGEI KADUT STREET 1
Tel: +65 63621588
Email: HOWARD@CRAFTSTONE.COM.SG
Web: www.craftstone.com.sg

Integrating 40 years of experiences and technology from leading USA's manufacturers, CraftStone® International absorbs the natural essence and distinct stone making techniques to create high quality artificial stone veneers under the trademark brand CraftStone® that carry a 25 Years Product Warranty. As a renowned leading manufacturer, CraftStone® products are exported to 25 countries worldwide.

Amtronic Pte Ltd

1.1B4-04(30)

Address: 新加坡 Singapore North View Bizhub-6 Yishun Industrial Street 1 #07-17
Tel: 021-69213000
Email: lenglei@meitesh.com
Web: www.meitesh.com

ANTRONIC作为一家投资公司，在中国投资了上海美特幕墙有限公司、无锡茂泰特种门有限公司以及美特清电能源有限公司，能为我们的国内外业主提供建筑外墙从顾问、设计到加工的一站式服务。
Amtronic Pte Ltd is an investment company and also the parent company of Shanghai Meite Curtain Wall system Co.,Ltd, Wuxi Moritec Special Doors Co.,Ltd And MT Green Power. The company provides a one stop solution to our client for their external application of their building. the services start from consultancy, design and fabrication for the international and Greater china market.

Eindec Singapore Pte Ltd

1.1B4-04(4)

Address: 新加坡 Singapore 100H OC @ Pasir Panjang, #01-01
Tel: +6562651311
Email: reginefoo@eindec.com.sg
Web: www.eindec.com.sg

英德集团成立于1984年，2002年在新加坡上市，是一家集科研、设计、生产、销售、服务为一体的国际高新技术企业，专注于通风与空气净化近35年，在洁净室、暖通空调、海事、民用新风领域均处于国际领先水平 。
英德集团目前的产品已覆盖亚洲、欧洲十几个国家和地区，拥有多项发明专利，是亚太地区顶级的智能设备产品制造商之一。
英德集团致力于为每一个客户提供专业化、个性化、全方位的服务。

THE BALLET & MUSIC COMPANY

1.1B4-04(6)

Address: 新加坡 Singapore Singapore-160 Robinson Road #06-01 SBF Center Singapore 068914
Tel: 17353222592
Email: BALLETNMUSIC@GMAIL.COM
Web:

The Ballet and Music Company is established to Promote the Performing Arts as life long learning skills and to make it into a lifestyle skill that would be appreciated by many.
We are a Singapore based company looking to expand beyond Singapore.

Ninja Logistics Pte Ltd

1.1B4-04(7)

Address: 新加坡 Singapore 30 Jalan Kilang Barat
Tel: +8613922185750
Email: peiyi.han@ninjavan.com
Web: www.ninjavan.com

Ninja Van是东南亚最大规模的电商派送物流公司，覆盖新加坡，马来，越南，菲律宾，印尼，泰国。目前在东南亚服务电商领头羊，中小企业，以及各国跨境电商和货运代理，解决当地物流痛点。针对跨境客户，Ninja Van可提供一条龙服务包括头程，清关，当地派送，COD代收货款，以及相应的退件处理。Ninja Van坚持维护自营车队以及分拣中心，利用科技让电商企业无忧地下单，跟进包裹，完成派送。

Singapore Business Federation

1.1B4-04(8)

Address: 新加坡 Singapore Singapore-Singapore-160 Robinson Road #06-01 SBF Center Singapore 068914
Tel: +6568276881
Email: jiawei.wong@sbf.org.sg
Web: www.sbf.org.sg

As the apex business chamber, SBF champions the interests of the business community in Singapore in trade, investment and industrial relations. SBF not only acts as the bridge between businesses and government to create a conducive business environment; But also represents the business community in bilateral, regional and multilateral fora for the purpose of trade expansion and business networking.

EdgeProp

1.1B4-04(9)

Address: 新加坡 Singapore 150 Cecil Street #13-00
Tel: +6562328688
Email: annie.low@edgeprop.sg
Web: www.edgeprop.sg

新加坡宜居房产EdgeProp是新加坡最受买家、投资者及房产中介信赖的一站式房地产市场信息平台。EdgeProp团队是行内资深的一线专家，提供最前沿的楼市动态、最热门的楼盘、最快的成交纪录、最全面的购房指南，最实用的市场分析。
作为新加坡最大型的在线房产搜索引擎之一，EdgeProp收录全国海量真实房源，公寓、执行共管公寓、公共组屋、别墅或写字楼任你选。
Edgeprop.sg is the best property portal for home-seekers, buyers, investors and real estate agents alike in Singapore. We live by our tagline, “Property Personalised” and aim to deliver a truly customised property-seeking experience that is tailor-made for all your needs.

汇丰控股有限公司 / HSBC Holdings plc

1.1B5-01

Address: 英国 United Kingdom E14 5HQ-London-8 Canada Square
Tel: +86-21-38881943
Email: cherryzhang@hsbc.com.cn
Web: www.hsbc.com

汇丰是全球最大的银行及金融服务机构之一。我们通过四大环球业务：零售银行及财富管理、工商金融、环球银行及资本市场以及环球私人银行，为超过3,900万名客户提供服务。我们的业务网络遍及欧洲、亚洲、中东及非洲、北美和拉美，覆盖全球66个国家和地区。
HSBC is one of the world’s largest banking and financial services organisations. We serve more than 39 million customers through four global businesses: Retail Banking and Wealth Management, Commercial Banking, Global Banking and Markets, and Global Private Banking. Our network covers 66 countries and territories.

南洋商业银行有限公司 / Nanyang Commercial Bank,Limited

1.1B5-02

Address: 香港地区 香港-香港-中环德辅道中151号 Hong Kong 151 Des Voeux Road, Central, Hong Kong
Tel: 86-021-38566716
Email: mavisdeng@ncbchina.cn
Web: www.ncb.com.hk

南洋商业银行有限公司(简称"南商")于1949年12月14日在香港开业。南商本着「以客为先、以礼待人」的服务宗旨及坚守「信誉第一、服务至上」的原则，以立足香港、背靠祖国、面向世界，服务各地客户为己任。Nanyang Commercial Bank, Limited ("NCB"), commenced business in Hong Kong on 14 Dec 1949. NCB has cherished the spirit of "Customer-Oriented and Courteous Service" and upheld the principle of "Reputation First and Service-Driven". While establishing a strong foothold in Hong Kong with the support of the Motherland, NCB has taken on the mission to look globally and serve customers around the world.

安永 / EY 安永

1.1B5-03

Address: 英国 United Kingdom London-SE1 2AF-1 More London Place
Tel: 021-22283507
Email: Jerry-YQ.Wang@cn.ey.com
Web: www.ey.com

EY provides four integrated service lines - Assurance, Advisory, Tax and Transaction Advisory Services. Our high-performing, multidisciplinary teams help clients fulfill regulatory requirements, keep investors informed and meet stakeholder needs.

GLP Management Ltd

1.1B5-04

Address: 香港地区 HongKong China Central Hong Kong-35/F One Exchange Square 8 Connaught Place
Tel: 02161055853
Email: kizhang@glprop.com
Web: www.glprop.com

普洛斯是全球领先的现代物流设施及解决方案提供商，在地产和私募基金领域管理的资产总额超640亿美元，拥有和管理的物业组合超过7,300万平方米。在中国，普洛斯是中国市场最早启动智慧物流及相关产业生态系统的打造者和促进者，在42个战略性的区域市场投资、开发并管理着336个物流园、工业园及科创园，同时普洛斯还基于支持物流、新能源及科技产业的发展，通过股权投资、金融服务及数据科技平台领域，积极打造领先的产业发展生态体系。

CMA CGM Group

1.1B5-05

Address: 法国 Provence-Marseille-4, quai d Arenc cedex 02 Marseille 13002 France France Provence-Marseille-4, quai d'Arenc cedex 02 Marseille 13002 France
Tel: 021-23069539
Email: shg.lewang@cma-cgm.com
Web: www.cma-cgm.com

Led by Rodolphe Saadé,CMA CGM Group is a world leader in shipping and logistics. Employing over 110,000 staff members worldwide, the Group is present on all five continents through its 755 offices, in more than 160 countries, serving 420 ports with a fleet of 509 vessels.

冯氏集团 / Fung Group

1.1B6-01/1.1B7-01

Address: 香港地区 九龙-Kowloon-长沙湾道 Hong Kong Kowloon-Cheung Sha Wan 888
Tel: +86 (21) 33252810
Email: FUNGGROUPCIIE@fung1937.com
Web: www.funggroup.com

冯氏集团创始于1906年，作为拥有113年历史的全球消费品供应链引领者，业务包括贸易、物流、分销和零售，涵盖从合规到产品设计开发、原料采购、工厂筛选、生产管理、物流等各环节，将数以万计供应商与领先品牌及零售商紧密联系，满足消费者的需求。对于计划在中国或亚洲地区建立市场份额或提升市场占有率的品牌及零售商而言，冯氏集团将是您首选的合作伙伴。我们的目标是创造未来的供应链，改善供应链领域所涵盖的十亿人民的生活。
Fung Group has a rich history and heritage in supply chain management dating back to 1906. The Group convenes the global supply chain by creating customized, end -to-end supply chain and logistics services and solutions ranging from product design and development, compliance to raw material and factory sourcing, manufacturing control, logistics.

Mediterranean Shipping Company

1.1B6-04

Address: 新加坡 Singapore Singapore-6 Temasek Boulevard, #34-05, Suntec Tower Four
Tel: +65 62556030
Email: daniel.tan@msc.com
Web: www.msc.com

MSC Mediterranean Shipping Company is a global leader in container shipping. We have a modern and green fleet of 510 container vessels with an intake capacity of circa 3.3 million TEU. Our global sailing schedules cover 200 routes, calling at 500 ports. A network of 480 offices ensures that we combine global coverage with local knowledge and expertise.

FOUR SEASON LOGISTICS CORPORATION

1.1B7-02

Address: 美国 United States of America NJ-LINCROFT -243 WOODLAND DRIVE
Tel: +86 (21) 6605 2799 / +86(21) 6605 2799
Email: csp@cfscon.com
Web: www.fslcorp.com

我们是一家总部位于美国新泽西州，提供专业供应链管理、及综合物流服务的行业领先企业。公司专注全球范围内的海运、空运、公路及铁路运输业务，在美国和中国建立有完善的仓储和运输业务运营团队，擅长危险品运输、合约物流、装备物流、电子商务物流等。同时，也是一家从事国际、国内货物运输及报关服务的一级货运代理企业。公司成立至今，致力于成为“最具核心竞争力的供应链服务商”，深得广大客户的首肯和信赖。
Four Season Logistics Corporation is a leading supply chain management company with its headquarter in New Jersey, USA. We focus not only integrated logistics service but also introducing US products mainly healthcare, foodstuff and aging industry through web sales, brand operation, customer management,as well as IT research into China market.

Yusen Logistics Co., Ltd

1.1B6-02

Address: 日本 Japan Sumitomo Fudosan Shiba-Koen Tower 2-11-1, Shiba-Koen Minato-ku Tokyo 105-0011, Japan
Tel: 02122207550
Email: nicole.ma@cn.yusen-logistics.com
Web: www.yusen-logistics.com

日邮物流是一家屡获殊荣的全球物流解决方案供应商，在货运代理和运输方面拥有60多年的专业经验我们拥有全球网络布局以及超过2万4千名员工，致力于提供高效能的供应链和运输解决方案，从而为顾客带来高附加值效益。日邮物流专注于供应链的各个环节，在医疗器械、汽车、零售与食品、航空航天和消费品等行业提供领先的理念服务。
Yusen Logistics is an award-winning global logistics provider with more than 60 years of expertise in freight forwarding and transportation. With over 24,000 employees, along with our global and domestic network, we are committed to delivering high-performance supply chain and transportation solutions leading to value-added results.

伊藤忠商事株式会社 / ITOCHU Corporation

1.1B6-05

Address: 日本 东京都-港区北青山2-5-1 Japan Tokyo-5-1, Kita-Aoyama 2-chome, Minato-ku,
Tel: 02168776688
Email: fang.yijie@sha.itochu.com.cn
Web: www.itochu.co.jp

伊藤忠商事株式会社从1858年第一代伊藤忠兵卫做麻布生意创业开始，历经一个半世纪风雨沧桑，不断成长发展。
现在，伊藤忠商事已成为一家在世界63个国家和地区拥有约110个据点的大型综合商社，在纤维，机械，金属，能源，化工品，粮油食品，生活资材，住居，信息通信，金融等各领域从事国内贸易，进出口贸易，三方贸易，以及国内外贸易投资，业务范围广泛。
ITOCHU has evolved and grown over 150 years. With approximately 110 bases in 63 countries, ITOCHU is engaging in domestic trading, import/export, and overseas trading of various products such as textile, machinery, metals, energy, chemicals, food, general products, realty, information and communications technology, and finance, as well as business investment in Japan and overseas.

FAR-EASTERN SHIPPING COMPANY PLC.

1.1B7-03

Address: 俄罗斯 Russia MOSCOW-75 Sadovnicheskaya street
Tel: 021-23276222
Email: Cathryn.zhou@fclcl.com
Web: www.fesco.com

FESCO拥有将近140年的悠久历史，是俄罗斯规模最大的运输物流公司之一。通过海铁线路贯穿远东地区将俄罗斯地区与亚洲经济中心连接到一起，是远东最大的港口集装箱运营商，也是您各项业务可靠的合作伙伴。
全球有6000多家公司与FESCO合作，放心的将货物交付给我们。FESCO丰富的经验、高度的专业化水平以及拥有的资产能够向每一位客户提供最有效的物流方案。
With a history of more than 130 years, FESCO is the one of the largest logistics companies in Russia that connects its eastern and western borders with the world’s key economic centers, asserting itself as a leader in the industry.
More than 7500 companies trust us with their cargo. Our experience, high level of expertise, and assets allow FESCO to offer each customer the most effective logistics.

日本通运 / Nippon Express

1.1B6-03

Address: 日本 东京都-港区-东新桥一丁目9番3号 Japan Tokyo-Minato-Ku-1-9-3, Higashi-Shimbashi
Tel: 86-21-62950202
Email: Ma-takiguchi@sh.nex-uni.com.cn
Web: www.nittsu.co.jp

日本通运的创建要追溯到1872年，目前在全世界除日本之外的47个国家的300个城市拥有707个网点，成为日本最大、全球前5的综合性物流企业。日通运用陆、海、空相结合的运输模式，跨越国家和地区，如同物流行业的百货店一样在全球提供一站式的物流解决方案。
乘着“一带一路“的东风，日通开发了中欧铁路班列以及海铁联运服务。并在2018年12月成功开行西安至德国杜伊斯堡的日通专列，成为首家开通专列的日本企业。
Nippon Express currently is holding a network of 707 locations in 300 cities covering 47 countries out of Japan, and becomes the largest comprehensive logistics enterprise in Japan and the top five comprehensive logistics enterprise worldwide. We makes full integration of land, sea and air transport mode to provide one-stop logistics solutions,just like department store in the logistics industry.

冯氏集团 / Fung Group

1.1B7-01

Address: 香港地区 九龙-长沙湾道 Hong Kong Kowloon-Cheung Sha Wan 888
Tel: +86 (21) 33252810
Email: FUNGGROUPCIIE@fung1937.com
Web: www.funggroup.com

冯氏集团创始于1906年，作为拥有113年历史的全球消费品供应链引领者，业务包括贸易、物流、分销和零售，涵盖从合规到产品设计开发、原料采购、工厂筛选、生产管理、物流等各环节，将数以万计供应商与领先品牌及零售商紧密联系，满足消费者的需求。对于计划在中国或亚洲地区建立市场份额或提升市场占有率的品牌及零售商而言，冯氏集团将是您首选的合作伙伴。我们的目标是创造未来的供应链，改善供应链领域所涵盖的十亿人民的生活。
Fung Group has a rich history and heritage in supply chain management dating back to 1906. The Group convenes the global supply chain by creating customized, end -to-end supply chain and logistics services and solutions ranging from product design and development, compliance to raw material and factory sourcing, manufacturing control, logistics.

Rail Cargo Austria AG

1.1B7-04

Address: 奥地利 维也纳-维也纳-Am Hauptbahnhof 2 Austria Vienna-Vienna-Am Hauptbahnhof 2
Tel: 0043 5 7750
Email: info@railcargo.com
Web: railcargo.com

奥地利铁路货运集团 (Rail Cargo Group)：ÖBB的货运子公司。RCG是欧洲领先的铁路物流公司之一，年销售额23亿欧元，拥有8500名员工。与强大的合作伙伴，RCG提供了一个全面的网络端到端物流在欧洲和远至亚洲。它连接着欧洲各大城市和港口，以及俄罗斯、土耳其和中国繁荣的经济中心。
Rail Cargo Group: Freight traffic of the ÖBB. The RCG is one of the leading rail logistics companies in Europe with annual sales of € 2.3 billion and 8,500 employees. Together with strong partners, the RCG offers a comprehensive network of end-to-end-logistics in Europe and far beyond to Asia. It connects European conurbations and ports with prosperous economic centers in Russia, Turkey to China.

Cargolux Airlines International S.A.

1.1B7-05

Address: 卢森堡 Luxembourg Luxembourg-Luxembourg airport
Tel: 0035242113705
Email: aottinger@cargolux.com
Web: www.cargolux.com

Cargolux, based in Luxembourg, is Europe's leading all-cargo airline with a modern and efficient fleet of 14 Boeing 747-8 freighters and 16 Boeing 747-400 freighters. The Cargolux worldwide network covers over 75 destinations on scheduled all-cargo flights. The company has more than 85 offices in over 50 countries, and operates an extensive global trucking network to more than 250 destinations.

CONHEXA LINKSTAR

1.1B7-06

Address: 法国 France Steenvoorde -15, Chemin Des Cendres 59114
Tel: 86-021-50643461
Email: info@linkstarlogistics.com
Web:

Conhexa集团总部位于法国北部的敦刻尔克，从事食品相关的冷链仓储与运输服务40多年，目前拥有500，000立方的冷冻，冷藏和干鲜货物的运作能力，超40，000托盘的仓储容量，运输车队辐射英国，比利时，德国，法国，意大利，西班牙等等主要欧洲大陆国家。

DB SCHENKER德铁信可

1.1B7-07

Address: 德国 Germany Germany-45128 Essen-Kruppstrasse 4
Tel: +86 21 61708705
Email: vivian.liang@dbschenker.com
Web:

德铁信可是全球综合物流服务的领军者之一，拥有密集的全球服务网络，在全球140多个国家共有超76,000名员工。我们竭力为各行业客户提供高效快捷的空运、海运、铁路及陆路运输服务以及合约物流等供应链管理解决方案的同时，我们还提供特殊物流服务包括会展运输服务及体育赛事物流服务。

EWE GROUP PTY LTD

1.1B7-08

Address: 澳大利亚 Australia NSW-CHULLORA-Unit 2, 21 Worth Street, Chullora NSW 2190 Australia (Enter from Gate 2)
Tel: 021-55961727
Email: ciie@ewecn.com
Web: en.ewe.com.au

EWE GROUP是全球领先的跨境物流服务和供应链解决方案提供商，成立于2010年，总部位于澳大利亚悉尼，并在墨尔本、布里斯班，德国法兰克福和中国上海设有运营中心，运输网络覆盖全球220多个国家和地区。EWE团队励精图治，逐步将我们的业务发展到国际递送，海外仓网，供应链金融及咨询服务等多个新型物流领域。企业致力于搭建全球化的供应链生态圈，用创新技术，为企业提供全球化的供应链解决方案，助力企业发展。
EWE GROUP was established in Sydney, Australia, 2010.
Since its establishment, EWE has built: comprehensive logistics solution driven by our highly sophisticated operation system, providing the forecasting services of demand and supply in supply chain for the manufacturer and retailer based on IT technologies and data analysis, and vigorously developing and introducing IT technologies and equip.

俄罗斯铁路物流 / JSC RZD Logistics (RZDL)

1.1B7-09

Address: 俄罗斯 莫斯科-市马什巴雷瓦耶夫大街34号1号楼 Russia Moscow-34 bldg. 1 Mashi Poryvaevoy str.
Tel: +7 495 988 68 68
Email: info@rzdlog.ru
Web: www.rzdlog.com/cn

俄罗斯铁路物流股份公司在发展俄罗斯铁路集团物流业务框架之内成立于2010年11月19日。
俄罗斯铁路物流股份公司保证高技术和可靠全世界货物运输、仓库服务和货物运输代理服务，组织供应链、工业企业综合物流服务以及小件货物运输服务。2018年公司处理了6320万吨货。俄罗斯铁路物流股份公司在俄罗斯拥有33家分。公司和分支机构，在国外有5家子公司和合资公司。公司工作人员数量大约有1000人。
JSC RZD Logistics was established on November 19, 2010 as part of the development of the logistics business within Russian Railways (RZD) Holding. The Company provides a range of reliable services such as freight, storage and forwarding of cargos all over the world, optimization of supply chains, complex logistics service for production facilities and container transportation of shot lots.

On Time Express Limited

1.1B7-10

Address: 香港地区 HongKong China Unit 18,1/F.,Sino Industrial Plaza,9 Kai Cheung Road,Kowloon Bay
Tel: 18221772290 / +86 13501166006
Email: 00323663@yto.net.cn
jinbo.chen@bjs.ontime-express.com
Web: www.ontime-express.com

On Time was founded in 1995. Operating from Hong Kong the company started as an international freight forwarder. We've grown considerably in that time,now a renowned international logistics company with 53 offices in 18 countries and regions. This gives us flexibility and expertise at local level and the ability to offer the competitive service you expect of an integrated logistics provider.

Australia Post

1.1B7-11

Address: 澳大利亚 Australia Victoria-Melbourne-111 Bourke Street
Tel: +61 3 91069379
Email: lisa.robinson@auspost.com.au
Web: www.auspost.com.au

Australia Post is an Australian government-owned corporation that provides postal services. Australia Post delivers to 190+ countries and has a strong relationship with China Post. Together Australia Post and China Post have established Sai Cheng Logistics. Australia Post also has cross border eCommerce delivery solutions through APG eCommerce Solutions with established global trade lanes.

Kuehne + Nagel International AG

1.1B8-01

Address: 瑞士 Switzerland Schindellegi -P.O. Box 67, CH - 8834 Schindellegi SZ
Tel: +86 21 26028782
Email: lily.ma@kuehne-nagel.com
Web: www.kuehne-nagel.com

德迅集团是全球领先的物流企业之一，在全球100多个国家超过1,300多个地点拥有近82,000名员工。从海运、空运、合同物流到陆路运输业务都处于领先的市场地位，并且全力专注于提供基于IT技术的综合物流解决方案。
欲了解更多信息可访问官方网站www.kuehne-nagel.com
With almost 82,000 employees at more than 1,300 locations in over 100 countries, the Kuehne Nagel Group is one of the world's leading logistics companies. Its strong market position lies in the seafreight, airfreight, contract logistics and overland businesses, with a clear focus on providing IT-based integrated logistics solutions.
Further information can be found at www.kuehne-nagel.com

中国物流资产控股有限公司 / China Logistics Property Holdings

1.1B8-02

Address: 香港地区 Hongkong-Sheung Wan-香港上环皇后大道中183新纪元广场中远大厦32楼13室 Hong Kong Hongkong-Sheung Wan-Rm 13, 32/F Cosco Tower, New Era Square, 183 Queen's Road Central
Tel: 021-39595656
Email: huangjun@yupei-scm.com
Web: www.yupeigroup.com

China Logistics Property Holdings Co., Ltd.（香港联交所主板上市，股票代码:01589.HK），成立于2000年，致力于成为全球卓越的物流与供应链一体化解决方案提供商与服务商，目前业务涵盖物流基础设施设计、开发、租赁、运营及供应链管理，并主要服务于生产、零售、电子商务、第三方物流等领域。
CNLP(01589.HK) is committed to becoming a global service and solution provider for the integration of logistics with the supply chain. The business scope of our company covers logistics, infrastructure design, development, leasing, operations and supply chain management. Our major services are provided to the customers in the fields of manufacture, retail, e-commerce, and third-party logistics etc.

魔法灯 / MAGIC LAMP

1.1B8-03

Address: 新西兰 New Zealand Unit S,63 Hugo Johnston drrive,Penrose,Auckland,New Zealand
Tel: +6 0404 669 188
Email: luke.z@mofadeng.com
Web: www.mofadeng.com

魔法灯是一家为全球商家及个人提供一站式跨境电商服务公司，魔法灯在澳大利亚，新西兰，德国设有海外仓库，拥有300多个品牌授权，全资的国际物流公司。魔法灯旗下拥有：跨境e店，洋小范，环球驿站，魔法屋，魔法之旅等行业解决方案，系统形态包括小程序，APP，公众号等。
我们致力于不断完善服务及赋能用户，并打造矩阵式服务模式的闭环生态圈，让跨境电商更简单。
Magic Lamp provide sone-stop solutions for Cross-Border E-Commerce businesses and individuals. Magic Lamp originally established in Auckland,New Zealand in 2015.It has expanded its business to Hamilton,Christchurch,Wellington,Sydney,Adelaide and many other cities and region world-wide.Magic Lamp has provided its servicesto more than 100,000 thousand business in CBEC industry.

Hupac SA

1.1B8-04

Address: 瑞士 Switzerland Ticino-Chiasso-Viale R. Manzoni
Tel: +41 58 8558021
Email: mrapis@hupac.com
Web: www.hupac.com

Hupac is the leading network operator in intermodal transport in Europe. For over fifty years, we have pioneered innovative, reliable rail transport and thus made an important contribution to modal shift from road to rail. Hupac offers an extensive European network perfectly integrated to all major destinations in China: the best way to connect networks.

Apex Logistics International Inc.

1.1B8-05

Address: 美国 United States of America California-Los Angeles-18554 S. Susana Road Rancho Dominguez, CA 90221
Tel: (86) 021-2411 6341
Email: michaelhan@apexglobe.com
michaelhan@apexglobe.com.cn
Web: www.apexglobe.com

Established at the start of the new millennium, Apex Group is a growing supply chain solutions provider with a global reach extending over six continents. We have expanded our service offerings to International Air, Ocean Transportation, Customs Brokerage, Local and Domestic Trucking, Warehouse Management, Global Supply Chain Management, 3PL, Trade Compliance and E-Commerce.

环世物流控股有限公司 / WORLDWIDE LOGISTICS HOLDING LIMITED

1.1B8-07

Address: 香港地区 香港九龍灣宏開道8号,其士商业中心7樓720室 Hong Kong Unit 720, 7/F Chevalier Commercial Centre, 8 Wang Hoi Road, Kowloon Bay, Hong Kong
Tel: 021-61326911
Email: sha.corayu@worldwide-logistics.cn
Web: www.worldwide-logistics.cn

Worldwide Logistics Group (WWL) established in 2001 .WWL is a State approved NVOCC, and a member of IATA.We can offer international sea and air transportation, rail transportation, international multi-modal transportation, warehousing, shipping agency, freight forwarding, and logistics solution services, which covers entire transportation services and freight forwarding service worldwide.

UNITED WIN LOGISTICS, S.A

1.1B8-08

Address: 西班牙 Spain 46014 Valencia-Andarella，Bloque3,5piso
Tel: 0755-23981022
Email: personnel@united-win.com
Web: www.united-win.com

UNITED WIN LOGISTICS, S.A:for a decade we have offered global solutions with local focus and expertise in Spain market.Our office in Valencia,Barcelona,Murcia and soon to open Madrid configure our network of highly trained logistics professionals who expertly manage and serve our client's supply chain requirements,no matter how complex or specific,in coordination with our UWL offices in China.

Arborex Corporation

1.1B8-06

Address: 日本 Japan Tokushima-Ken-Tokushima-City-4-59,Kaigan-Cho,Tsuda
Tel: 0081-45-5018511
Email: akimoto.ii@nice.co.jp
Web:

Wood processing & Precut Building Materials Manufacturing

乔达国际货运 / GEODIS

1.1B9-01

Address: 法国 France Paris-Levallois-Perret-26 Quai Charles Pasqua 92300
Tel: 18621689386
Email: fiona.zhang@geodis.com
Web: www.geodis.com

乔达隶属于SNCF即法国国营铁路集团，是法国排名第一、欧洲排名第四的物流企业。乔达在全球逾67个国家设立直属办公室，服务网络覆盖全球超120个国家。依靠供应链优化、货运、合同物流、配送与快递、公路运输这五大核心业务，乔达为客户提供包括专业物流从业人员、基础设施、流程与系统要素在内的门到门的解决方案，以成为其合作伙伴。
GEODIS, which is part of SNCF(Société nationale des chemins de fer français) Logistics, which in turn is a business line of the SNCF Group, is the number one Transport and Logistics operator in France and ranked number four in Europe. The international reach includes a direct presence in 67 countries and a global network spanning over 120 countries.

ACE

1.1B9-02

Address: 土耳其 Turkey Muallimkoy Cad. No:34, Muallimkoy , Gebze/Kocaeli
Tel: 021-58955268
Email: rosamandgong@acewlt.com
Web: www.acewlt.com/en

ACE was founded in Turkey in 1992. Focusing on warehousing, logistics and consulting, it is also a transaction warehouse which is approved by LME, ACE has grown to be a leading service provider to global refined metal market traders, suppliers and final buyers. Our clients mostly trade primary aluminium, zinc, copper cathode and so on. We meet market and customer expectations by storing products.

CBX GLOBAL / CBX GLOBAL

1.1B9-03

Address: 多米尼加 Dominican Republic Santo-Washington-Avendia George Washington # 105
Tel: +86-21-63335312
Email: edou@cbxglobal.com.cn
Web: www.cbxglobal.com
www.cbxglobal.com

CBX GLOBAL成立于1983年，是一家领先的全球供应链和物流解决方案集成服务供应商，在全球191个国家的786个城市设有分公司，业务遍及美国、加勒比海、中美洲、亚洲和欧洲。
CBX Global Asia致力于打造全渠道供应链服务集成商，为亚洲及北美、南美、加勒比海、欧洲、澳大利亚、非洲等地区提供专业的供应链技术从而为深度优化各产业链形成综合供应链解决方案。
CBX Global has evolved to become a multinational corporation with 23 facilities in 8 countries with over 500 employees. Growing from its original market focus in the apparel industry, CBX Global now delivers solutions in multiple trades, including healthcare and e-commerce. Together with our global strategic partners, CBX Global has expanded services to provide global solutions with local care.

Furlog Srl

1.1B9-04

Address: 意大利 博洛尼亚-博洛尼亚-Via San Felice 26 Italy Bologna-Bologna-Via San Felice 26
Tel: +39 059 6132066
Email: eleonora.bugane@furlog.cn
Web: www.furlog.cn

Furlog 是一家专业为铁路、航空、海运、物流等提供定制解决方案的多式联运运营商。作为杰出的合作伙伴，Furlog在全球范围内为您提供从接送到目的地的全程协助和完善的服务.
Furlog is a Multimodal Transport Operator specialized in customized solutions for rail, air and sea, logistics.
Proposing as unique partner, Furlog offers assistance and complete service from the pick up to the destination, all over the world with our native Chinese and Russian speakers, including value added services.

JAS Jet Air Services S.P.A

1.1B9-05

Address: 意大利 Segrate-Milano-Via R. Sanzio 6/8, 20090 Italy Segrate-Milano-Via Raffaello Sanzio 6/8, 20090
Tel: +39-02-21692-521 / +39-02-21692-531
Email: stefano.castellazzi@jas.com stefano.roncone@jas.com
Web: www.jas.com

JAS is a premier "go-to" company for those wishing to move cargo from anywhere in the world to anywhere else in the world. Through advanced tracking technologies, sophisticated global communications, and large team of experts across a broad spectrum of specialties, JAS is able to cost effectively handle the shipping of everything from tiny camera parts up to the massive components of an oil rig.

Savino Del Bene S.p.A.

1.1B9-06

Address: 意大利 Italy Scandicci-Via del Botteghino, 24/26
Tel: +86 13816134159
Email: evan.yin@savinodelbene.com
Web: www.savinodelbene.com

Established in Florence in the early years of the 1900s, today Savino Del Bene is the largest Italian shipping operator, with a network of more than 280 offices and over 4,000 employees across the five continents.

欣海国际报关集团有限公司 / Xinhai International Customs Brokerage Group Limited

1.1B9-07

Address: 香港地区 香港湾仔皇后大道43-59号东美中心1307-8室 Hong Kong Room 1307-8, Dominion Center，No.43-59 Queen's Road，Wanchai，Hong Kong
Tel: 021-35383154
Email: yuzhiyue@thecustoms.com.cn
Web: www.xinhaicustomsbroker.com

欣海国际报关集团有限公司致力于打造以通关为核心的综合贸易服务。我们聚合外贸、通关、货代、运输、仓储等优势资源，共同为进出口收发货人、进出口贸易商和电商平台提供一站式清关物流服务、关务咨询和物流方案咨询服务、跨境贸易与一般贸易相结合的综合解决方案。并且，我们在中国上海、宁波、重庆、昆山、天津、北京、义乌、南京、无锡等有分公司办事处，年报关量超百万票。
Xinhai International Customs Brokerage Group Limited was established in Hong Kong in 2011. More than 30 subsidiaries of the Group provide one-stop cross border supply chain services with customs clearance as the core. We integrate the advantages of foreign trade, customs clearance, freight forwarding, transportation, warehousing, packaging and so on. Our annual declaration forms exceed 1000000.

AMASS LOGISTICS INTERNATIONAL (HK)LIMITED

1.1B9-09

Address: 美国 United States of America Hongkong-Hongkong-21/ F CLIFFORD CENTRE, 778-784 CHEUNG SHA WAN ROAD, KOWLOON HONG KONG
Tel: 86 21 2602 6000*6334
Email: machenying.sh@amassfreight.com
Web: www.amassfreight.com

美设国际是一家自创始以来，就从未停止追求卓越服务品质的国际物流公司。从成立开始，公司已发展成为运输网络覆盖全球200多个国家，20,000个城市的国际型物流解决方案提供商。服务包括全球海运拼箱、海运整箱、铁路、空运、仓储、物流、配送、危险品运输、报关等。
The AMASS group is servicing a total of 20,000 destinations in more than 200 countries worldwide, offering services such as global LCL, FCL, Rail Transport, Airfreight, Warehousing, Logistics, Door to Door Delivery, Dangerous Cargo and Customs Clearance.

INTEREUROPA Logistics Services Ltd.

1.1B9-10

Address: 克罗地亚 CroatiaZagreb-10090 Zagreb-Josipa Loncara 3
Tel: +38513900607
Email: darko.skrnicki@intereuropa.hr
Web: www.intereuropa.hr/en/home-page

INTEREUROPA Group is operating for more than 70 years in 9 countries in South-Eastern Europe. We direct manage and control the movement of goods in all directions, reaching nearby and remote destinations quickly and safely.

WISEWAY LOGISTICS

1.1B9-11

Address: 澳大利亚 Australia NSW-Bankstown-39-43 Warren Ave, Bankstown, NSW 2200
Tel: +61488800361
Email: jerryhuang817@gmail.com
Web: www.wiseway.com.au

万纬物流(Wiseway)是澳大利亚一家领先的综合性的大型物流企业已在澳洲主板上市,在澳洲本土有着十五年的行业经验。Wiseway拥有海关监管仓政府执照、动植物检验检疫许可证、澳大利亚海关代理资质，以及IATA成员之一。

Ontar Mining Ltd (安大矿业)

1.1B9-12

Address: 加拿大 Canada ONTARIO-MISSISSAUGA-2650 MEADOWVALE BLVD UNIT 6
Tel: 9055679888
Email: ontarmining@gmail.com
Web: www.ontarmining.ca

公司成立于1999年。从事，加拿大的个别种类的矿产资源的购买，开矿，科研，试用。如：铀矿，稀土矿，土壤改良矿。

Emirates Logistics LLC

1.1B9-13

Address: 阿联酋 United Arab Emirates Dubai-DUBAI-1ST FLR, SHARAF BUILDING, KHALID BIN AL WALEED ROAD, AL KARAMA
Tel: 0097143377177
Email: zahedi@emirateslogistics.net
Web: www.emirateslogistics.com

Emirates Logistics is a pioneer in Logistics and Supply chain services , headquartered in Dubai today company operates in Middle East, India, Pakistan and Africa, It offers complete logistics solution such as but not limited to Freight Forwarding, Warehousing & Distribution, Contract Logistics, Hospitality Logistics, D & I services (Home appliances & Furniture), E Commerce facilitation services.

Jacksonville Port Authority (JAXPORT)

1.1B9-14

Address: 美国 United States of America Florida-Jacksonville-2831 Talleyrand Avenue
Tel: 1-904-357-3075 / +1 904 3573075
Email: Frank.Camp@JAXPORT.com
Web: www.jaxport.com

Located in Jacksonville, Florida, USA, the Jacksonville Port Authority (JAXPORT) is a full-service, international trade seaport in the Southeastern United States.

Konecranes Finland Corporation

1.1B9-15

Address: 芬兰 Finland Hyvinkaa-Koneenkatu 8, FIN-05830
Tel: 021-26061186
Email: Jerry.Fann@Konecranes.com.com
Web: www.konecranes.com

Konecranes is a world-leading group of Lifting Businesses™, serving a broad range of customers, including manufacturing and process industries, shipyards, ports and terminals. Konecranes provides productivity enhancing lifting solutions as well as services for lifting equipment of all makes. In 2018, Group sales totaled EUR 3.16 billion. The Group has 16,100 employees in 50 countries. Konecranes s.

GANTREX

1.1B9-17

Address: 比利时 Belgium rue du commerce, 19-1400 nivelles
Tel: 021-50586605
Email: Alice.liu@gantrex.com
Web: www.gantrex.com

With over 45+ years of experience and our solutions installed in every economically developed country in the world proving references unparalleled, Gantrex is proud to be the industry' s market.Around the globe, Gantrex to be With You to address your crane or specialty tracks needs.

SMIT Salvage Pte Ltd

1.1B9-18

Address: 新加坡 Singapore Singapore-23 Gul Road
Tel: +65 66684213
Email: v.li@smit.com
Web: www.smit.com

SMIT is a leading global marine services provider offering a 24/7 full range of salvage and towage services across the globe. Operating for over 175 years, SMIT Salvage has an unrivaled track record responding to ships in distress and also decades of experience in carrying out demanding wreck removal projects. In addition, our tug fleet provide harbor towage in around 90 ports in 36 countries.

Weathernews

1.1B9-19

Address: 日本 Japan Chiba-Chiba-Makuhari Techno Garden, Nakase 1-3 Mihama-ku
Tel: 62793821
Email: li-n@wni.com
Web: global.weathernews.com

The world's largest private weather service company, established in 1986. The first weather service company ever listed in the 1st Section of the Tokyo Stock Exchange (4825), having 900 staff including 100 meteorologists. In shipping market, service covers almost all the major shipping companies.

CLARKSONS PLATOU ASIA LIMITED

1.1B9-20

Address: 香港地区 HongKong China HONGKONG-WANCHAI-FLAT/RM 09-14 32/F SUN HUNG KAI CENTRE
Tel: 61030100
Email: yiyi.chen@clarksons.com
Web:

克拉克森航运经纪（集团）公司（以下简称"克拉克森"）是世界上最大的航运经纪公司之一，为遍布全球的客户提供一流的综合航运服务。迄今克拉克森已经拥有163年辉煌的经营历史。全球1420名员工分布在20个国家的48个代表处，为船东和租船人之间建立至关重要的沟通渠道，确保全球海运贸易平稳而高效地进行。克拉克森在亚洲拥有33年的经营历史。

Direct ChasssisLink, Inc.

1.1C0-01

Address: 美国 United States of America North Carolina-Charlotte-3525 Whitehall Park Drive
Tel: +1 704 447 3252
Email: ryan.houfek@dcli.com
Web: www.dcli.com

Direct ChassisLink, Inc. (DCLI) is the largest provider of marine and domestic/53' container chassis to the intermodal industry in the United States. Our high-quality chassis, innovative pricing models, and experienced logistics professionals uniquely position DCLI to deliver value to our customers across the supply chain ecosystem.

port of houston

1.1C0-02

Address: 美国 United States of America tx-usa -111 East Loop North (77029) P.O. Box 2562 (77252-2562) Houston, TX 77252-2562 United States
Tel: 21-63297625
Email: jennifer.qin@benline.com.cn
Web: www.portofhouston.com

The Port of Houston is a 25-mile-long complex of nearly 200 private and public industrial terminals along the 52-mile-long Houston Ship Channel. The eight public terminals are owned, operated, managed or leased by the Port of Houston Authority and include the general cargo terminals at the Turning Basin, Care, Jacintoport, Woodhouse, and the Barbours Cut and Bayport container terminals.

Prince Rupert Port Authority

1.1C0-03

Address: 加拿大 Canada BC-Prince Rupert-200-215 Cow Bay Rd., British Columbia, Canada
Tel: 2506272549
Email: jstromdahl@rupertport.com
Web: www.rupertport.com

The Port Authority is responsible for the overall planning, development, marketing and management of the commercial port facilities within Prince Rupert Harbour. This includes ensuring competitive, efficient and timely responses to customer needs and business opportunities.

货讯通 / CargoSmart

1.1C0-04

Address: 香港地区 新界沙田-香港科学园-科技大道西10号浚湖楼5楼 Hong Kong Shatin, New Territories-Hong Kong Science Park-5/F, Lakeside 2, No. 10 Science Park West Avenue
Tel: +852 2233 8174
Email: iris.tse@cargosmart.com
Web: www.cargosmart.ai

货讯通致力于协助企业发展全球供应链的数字化变革，掌控人工智能、物联网、区块链以及现今海运行业的分析，为物流和运输团队提供创新的解决方案。货讯通旨在构建整体视野，从而促进协同合作、提升可视性，并且优化供应链规划和运营.欢迎浏览: www.cargosmart.ai了解更多。
CargoSmart empowers companies to digitally transform their global supply chains. Leveraging AI, IoT, blockchain, and a deep understanding of ocean shipping, CargoSmart provides innovative solutions for transportation and logistics teams to optimize supply chain planning and operations.

Banco Santander

1.1C0-09

Address: 西班牙 Santander Group City, Av. de Cantabria s/n, 28660 Boadilla del Monte MADRID-SPAIN Spain Santander Group City, Av. de Cantabria s/n, 28660 Boadilla del Monte MADRID
Tel: 021-68475592
Email: apcomms@gruposantander.com
Web: www.santander.com

Banco Santander is a leading retail and commercial bank, founded in 1857 and headquartered in Spain. It has a major presence in 10 core markets and is the largest bank in the euro zone by market capitalization. At the end of June 2019, Santander had EUR 1.03 trillion in customer funds (deposits and mutual funds), 142 million customers, 13,000 branches and 200,000 employees.

日本瑞穗银行股份有限公司 / Mizuho Bank, Ltd.

1.1C0-12

Address: 日本 东京都-千代田区-大手町1-5-5 Japan Tokyo-Chiyoda-ku-1-5-5, Otemachi
Tel: 81-3-5220-8738
Email: masaaki.a.yasui@mizuho-bk.co.jp
Web: www.mizuhobank.co.jp/corporate/index.html www.mizuhobank.co.jp/index.html

日本瑞穗银行作为拥有日本最大客户基础和遍及国内外业务网络的领先银行，与瑞穗集团旗下的信托银行、证券公司、资产管理公司、智库等公司合作，运用汇集了集团综合力量的调研咨询功能，为广大客户提供最佳金融解决方案。我行充分发挥迄今积累的金融市场和服务相关经验，灵活运用遍及全球的业务网络，努力创造立足于中国和亚洲的新业务，支持日资企业开展海外业务，推动中资企业走出去及与跨国企业建立长期性、多层面的合作关系。

TPP - Terminales Portuarios Peruanos

1.1C0-05

Address: 秘鲁 Peru Lima-Magdalena del Mar-Av. Antonio Miroquesada # 425 of 1210
Tel: 5116268282
Email: mgt@tpp.com.pe
Web: www.tpp.com.pe

TPP is a Peruvian company specialized in the maritime and logistics business. We provide comprehensive and reliable solutions according to the profile and needs of each of our customers, .TPP is part of the Woll Group a Peruvian group with vast experience and tradition in transport and logistics.

MS&AD瑛得风险综研株式会社 / MS&AD InterRisk Research&Consulting,Inc.

1.1C0-10

Address: 日本 Japan Tokyo-Chiyoda-ku-WATERRAS ANNEX(10F&11F), 2-105,Kanda Awajicho
Tel: 021-68779165
Email: songxianqing@ms-ins.com.cn
Web: www.irric.co.jp/en

瑛得风险综研株式会社是MS&AD保险集团控股有限公司的成员。我们主要负责集团的风险相关服务业务。我们除了为企业提供智库功能外，还提供其他各种服务，包括咨询、研究、调查、研讨会及风险管理报告。
We are a member of MS&AD Insurance Group Holdings, Inc. We are responsible for the core of risk-related service businesses in the group, we provide various services including consulting, research and investigation, seminars, and publications for risk management in addition to the think-tank function.

双日株式会社 / Sojitz Corporation

1.1C0-13

Address: 日本 东京都-千代田区-内幸町2-1-1 Japan Tokyo-Chiyoda-ku-1-1, Uchisaiwaicho 2-chome
Tel: 02152034100
Email: song.yao@sojitz.com
Web: www.sojitz.com

双日株式会社是由日绵株式会社和日商岩井株式会社这两家分别拥有超过百年历史的公司于2004年4月1日合并重组而成，是日本具有代表性的综合商社之一。双日株式会社通过遍布世界各地的贸易,投资网络,开展国际化、多元化的业务活动。其范围涵盖汽车、成套设备、能源、金属资源、化工、食品、农林资源、消费品以及工业园区建设·运营等多种领域。双日集团在中国还拥有机械,树脂,食品等59家出资企业。
Sojitz Corporation was formed out the union of Nichimen Corporation and Nissho Iwai Corporation, both companies that boast incredibly long histories. For more than 150 years, our business has helped support the development of countless countries and regions. Today, the Sojitz Group develops wide-ranging general trading company operations in a multitude of countries and regions.

FIEGE Logistik Stiftung & Co. KG

1.1C0-07

Address: 德国 Germany Nordrhein-Westfalen-Greven- Joan-Joseph-Fiege-Straße 1
Tel: +86 15618499553
Email: johnson.jiang@fiege.com.cn
Web: www.fiege.com

The Fiege Group is a logistics service provider with 185 locations in EU and Asia. The company operates logistics centers and has a total of approximately 3 million sqm of storage and logistics space. As contract logistics specialists, the services cover the entire supply chain - from procurement logistics, production logistics and fulfillment logistics, disposal logistics, 3PL and LLP solutions.

Sumitomo Mitsui Banking Corporation

1.1C0-11

Address: 1-1-2, Marunouchi, Chiyoda-ku, Tokyo, 日本
Tel: 021-3860-9817
Email: takashi_azuma@cn.smbc.co.jp
Web:

三井住友银行(SMBC)作为三井住友金融集团的核心企业，拥有日本国内屈指可数的坚实业务基础与高效的战略执行力。同时凭借强劲的集团优势，发挥卓越的金融服务能力。

Wolters Kluwer HongKong Limited

1.1C0-14

Address: 香港地区 HongKong China 15/F, W Square,314-324 Hennessy Road, WANCHAI
Tel: 01058637834
Email: yang.zhu@wolterskluwer.com
Web:

荷兰威科集团是一家卓越专业信息服务提供商。来自世界各地法律、商业、税务、会计、金融、审计、风险管理、合规和医疗卫生等领域的专业人士依靠威科集团提供的信息工具及软件解决方案，来高效率地管理其业务，为其客户提供卓有成效的服务，并在纷繁复杂的市场环境中取得成功。
Wolters Kluwer is a leading global information services and solutions company. It provides information, software, and services that help legal, tax, finance, and healthcare professionals make their most critical decisions effectively and with confidence.

CSP Abu Dhabi Terminal

1.1C1-01

Address: 阿联酋 United Arab Emirates Abu Dhabi-Khalifa Port
Tel: +971 2 4925653
Email: kamal.vellasamy@cspadt.ae
Web: www.cspadt.ae

CSP Abu Dhabi Terminal is a result of partnership between Abu Dhabi Ports and COSCO SHIPPING Ports Limited. This is viewed as the major achievement of China and UAE's joint efforts to implement 'the 21st Century Maritime Silk Road' in ports and shipping industry.

The International Association «Trans-Caspian International Transport Route»

1.1C1-04

Address: 哈萨克斯坦 Kazakhstan Nur-Sultan-Dinmukhamed Kunaev st., 12/1
Tel: +77172571850
Email: s.shynybayev@tmtm.kz
Web: www.titr.kz

TITR is consolidating organization, which represents today interests of a number of countries and companies on the new Silk Way which now starting its functioning like in the days of the ancient Silk Road.
TITR is aimed to coordinate interaction of all the participants of transportation of goods and containers along the route.

Malec Holding Pty Ltd / Malec Holdings Pty Ltd

1.1C1-07

Address: 澳大利亚 Australia Vic-Corio-3/25 Heales Rd
Tel: 00613 5274 1000
Email: kevin.zhou@xh-global.com
Web: www.malec.com.au

Malec Brothers Transport is an AU family-owned logistics & export company with timber and transport operations in both Australia & USA. Malec also diversified into the Timber Export Industry. Malec now manages the purchasing of timber plantations, harvesting operations, transportation, packing and export of timber predominately to China.

Seaspan Ship Management Ltd. / Seaspan Corporation

1.1C1-02

Address: 加拿大 Canada BC-Vancouver-200 Granville Street, Suite 2600
Tel: +852 35889417 / +852 35889406
Email: vng@seaspanltd.ca
Web: www.seaspancorp.ca www.seaspancorp.com

Seaspan is the world's leading independent owner, operator and manager of containerships. We provide high-quality, modern vessels with best-in-class operations and innovative ship design.

鴻石實業股份有限公司 / HOMESEEDS COMPANY

1.1C1-05

Address: 台湾地区-台北市-台北市信義區忠孝東路五段258號1樓 Taiwan China Taiwan-Taipei City-1F.,NO.258,Sec.5,Zhongxiao E.Rd.,xiny Dist.,Taipei City110,Taiwan(R.O.C.)
Tel: 02-87864116 / 0932144598
Email: tinacoraldesign@gmail.com
Web:

2000年成立鴻石實業有限公司，負責人Tina Houng就讀Cal State LA Fashion Design。2010年在台灣成立藝術相關設計工作室，2013年旗下品牌有緹娜珠寶設計二間門市。業務包含中國、台灣地区、日本、帛琉等藝術品及企業相關禮贈品等零售、批發和設計服務。
The Homeseeds Company was established in the year 2000. The owner-Tina Houng majored in Fashion Design at Cal State LA, In 2010, art-related design workshops were established in Taiwan. Then, in 2013, a brand of Tina Design under her company opened two stores. Businesses include retail, wholesale, and design for artworks and corporate-related gifts in China, Taiwan Region, Japan, Palau and etc.

WWW TIMBER PRODUCTS LTD.

1.1C1-08

Address: 加拿大 Canada BC-WEST VANCOUVER-PO BOX 91221
Tel: 604-813-0779
Email: admin@wwwtp.ca
Web: wwwtp.ca

WWW Timber Products Ltd. is led by Bill Waugh and his team of log marketing professionals. Bill has been in the logging and log marketing business for over 35 years. WWWTP currently purchases and markets over 200,000 m3 per year and have over $20 million in annual sales. We have offices in both Vancouver and Campbell River.

Navis

1.1C1-03

Address: 美国 United States of America CA-Oakland-55 Harrison Street, Ste 600
Tel: 1-510-267-5473
Email: shannon.sebastian-lewis@navis.com
Web: www.navis.com

Navis is a provider of operational technologies and services that unlock greater performance and efficiency for the world's leading terminal operators and ocean carriers. Navis combines industry best practices with innovative technology and world-class services to enable our customers to maximize performance and reduce risk.

LLC TRADE IMPORT& EXPORT / TRADE IMPORT & EXPORT

1.1C1-06

Address: 俄罗斯 莫斯科-莫斯科-伏尔加格勒大街47号 Russia Moscow-Moscow-47 Volgograd Street
Tel: +74952017999
Email: bin.han@mail.ru
Web:

俄罗斯多洛克进出口有限公司：主要是出口俄罗斯一带一路木材为主，金融，投资以及出口独联体国家产品进出口业务。
Russia TRADE Import and Export Co., Ltd.: Mainly exporting Russia's Belt and Road, mainly timber, finance, investment and export of products from the CIS countries.

MORGAN-PATTERN INTERNATIONAL ENTERPRISES

1.1C1-10

Address: 尼日利亚 Nigeria LAGOS-LAGOS ISLAND-51/52 MARINA STREET
Tel: 08038199792
Email: MORGANCHIMEX@YAHOO.COM
Web:

IMPORT, EXPORT, COMMISSION AGENCY, MANUFACTURER'S REPRESENTATION AND GENERAL MERCHANDISE.

KEGREAL RESOURCES INTERNATIONAL LIMITED

1.1C1-11

Address: 尼日利亚 Nigeria LAGOS-OJO-171 ULTIMATE PLAZA, ALABA INT'L MARKET
Tel: 07032701705
Email: kechisweety@yahoo.com
Web:

WE ARE AN INDIGENOUS TOURISM AND PRODUCTS MARKETING AND DISTRIBUTION COMPANY.

GIC AFATEX

1.1C1-12

Address: 喀麦隆 Cameroon LITTORAL/ CAMEROON-DOUALA-AKWA
Tel: 00237 699735592
Email: gicafatex@yahoo.fr
Web:

GIC AFATEX is specialized in technical assistance for the development and expansion entrepreneurship and crafts in Cameroon and Africa. We provide consulting supports to economic missions, SME and SMI linkage with partners. We will attend CIIE 2019 with GWE, POWERLINK, ISMAM, SAPHIRPRESSING, DEXXYS CAM, BUROKLASS AFRIKADO, VALEUR D'AFRIQUE, SIMTECH 3D.

Malawi Department of Tourism

1.1C1-13

Address: Private Bag 326 Lilongwe Lilongwe 马拉维
Tel: +2651776509
Email: noahnansongole@visitmalawi.mw
Web: www.visitmalawi.mw

Bollore Transport & Logistics

1.1C2-01

Address: 法国 France Puteaux-31-32 quai de Dion Bouton – 92800 Puteaux - France
Tel: 021-33950617
Email: wenting.jiang@bollore.com
Web: www.bollore-transport-logistics.com

Bollore Transport & Logistics is a major international transport and logistics operator with 36,500 employees across 107 countries on 5 continents. Specialising in multimodal transport, the group is active in 4 businesses: Bollore Ports, Bollore Logistics, Bollore Energy and Bollore Railways.

ADANI PORTS AND SPECIAL ECONOMIC ZONE LTD

1.1C2-02

Address: 印度 India Gujarat-Ahmedabad-Adani House, Near, Mithakhali Cir, Muslim Society, 380009, Navrangpura
Tel: 022-66881196
Email: shahzad.athar@adani.com
Web: www.adaniports.com

Adani Ports and Special Economic Zone Limited (APSEZ) is the largest commercial ports operator in India accounting for nearly one-fourth of the cargo movement in the country.

Port de Barcelona

1.1C2-03

Address: 西班牙 Spain Catalonia-Barcelona-WTC Barcelona, Edifici Est, 08039
Tel: 0086 021 5876 6298
Email: shanghai@portdebarcelona.cn
Web: www.portdebarcelona.cat/en

巴塞罗那港提供了与世界上最重要港口相连的综合性全球连接网络.巴塞罗那港的基础设施包括集装箱、车辆、滚装码头、散货码头及有助于铁路联运的多类型码头。
Integrated Trade & Supply Chain
The Port of Barcelona offers an integrated network of global connections which link with the most important ports around the world.
The Port of Barcelona infrastructure facilities include terminals for different types of traffic including containers, vehicles, roro, bulk and also rail facilities that contribute to the intermodality.

ECU INTERNATIONAL ASIA PRIVATE LTD

1.1C2-04

Address: 印度 India Mumbai-Santacruz-The AvvashvaHouse.CST Road
Tel: 021-63643399-6308 / +91 22 66798100
Email: jerryy-sha@ecuworldwide.com
alok.roy@allcargologistics.com
Web: www.ecuworldwide.com

ECU Worldwide于1987年在比利时成立，是拼箱业务整合领域的全球领导者。
依靠着原品牌的悠久历史、对行业的热忱，以及灵活变通的业务模式,我们赋予了拼箱行业世界级的革新，并且树立了好几项行业标杆。ECU在全球拥有300家以上分公司企业并有员工人数4500人以上。
作为印度优质物流解决方案提供商Allcargo logistics的全资子公司，ECU Worldwide以其无与伦比的网络和卓越的客户服务为荣。我们时刻秉承着“无处不达”的承诺。
Founded in 1987 in Belgium, ECU Worldwide is the global leader in LCL consolidation and one of the major players in multi-modal transport. Backed by rich legacy, passion and agility, we assure you a smooth, safe and end-to-end co-ordination for your cargo.
ECU Worldwide takes pride in its unmatched network and exceptional customer service.

Pacific Technologies Consulting Group, LLC

1.1C2-05

Address: 美国 United States of America WA-Redmond-15625 NE 113th Ct.
Tel: 6173206597 / +1 617-320-6597
Email: michelle.zou@gmail.com
michelle.zou@ptcgconsulting.com
Web: ptcgconsulting.com

太平洋科技咨询（简称 PTCG）是一家专注于中美商业发展的战略及管理咨询公司。我们通过培训咨询和搭桥引线，帮助中美企业家学习最新的管理方法、技术及最佳的实例，帮助企业在今天快速突变的环境下，抓住中美发展的最佳时机，迅速增长。我们专长于帮助中国企业进入美国市场和帮助美国企业开发中国市场。我们的团队由具有多年在中国和美国拓展市场和经营管理经验的专家组成。
Pacific Technologies Consulting Group (PTCG) is a strategic consulting firm specializing in US-China cross-border business. Our headquarter is in Seattle, with consultants in Silicon Valley, New York and Los Angeles. We do training, consulting, coaching and marketing execution, help Chinese companies develop strategies and expand to the US market.

Great Way Trading & Transportation, Inc.

1.1C2-06

Address: 美国 United States of America California-Union City-32550 Central Avenue
Tel: (510)896-2818
Email: gong@great-way.com
Web: www.great-way.com

Great Way's mission is to promote international trade, and serve the importer and exporters, especially to the Chinese businesses that want to expand to the U.S. Great Way is a unique company that offers a one-stop solution for a full range of supply chain and logistics services, such as U.S. Customs brokerage, international freight forwarding with warehouses, and e-commerce.

美国休斯顿大商会和亚商会 / Greater Houston Partnership & ACC

1.1C2-07

Address: 美国 United States of America TEXAS-Houston-701 Avenida de las Americas, STE 900
Tel: +1 713 844 3661
Email: vwu@houston.org
Web: www.houston.org

我们是世界上最大的商会之一。我们的会员包括综合服务，消费品，文化服务，教育服务，能源，金融服务，医疗健康，法律服务，物流服务，信息技术，房地产，旅游服务等行业领域的1200多家公司和组织。代表休斯顿招商局帮助中国公司到美国建立贸易公司和生产工厂。
We are one of the largest Chambers of Commerce in the world. Our membership is comprised of more than 1,200 companies and organizations in the industry sectors of Comprehensive Services, Consumer Products, Cultural Service, Educational Services, Energy, Finance Services, Health, Legal Service, Logistic Services, Information Technology, Real Estate, Tourism Services and etc.

Identitat Global BV

1.1C2-11

Address: 荷兰 Netherlands Rotterdam -De Lairesselaan 163
Tel: +31621530401 / +41 79 401 22 23
Email: dr.yingzhang@outlook.com
urs@lusenberger.pro
Web: www.identitat.global

Identitat Global, with the background of engineering, entrepreneurship, innovation, law, and the forefront mission to help clients in their specific challenges and struggles in the business of cross borders, is a global consulting firm in the areas of business development, sustainability, education, private banking service, and personal wellbeing.

VIETRANS INT'L FREIGHT FORWARDER., JSC

1.1C2-13

Address: NO 42TRAN NHAT DUAT, DONG XUAN , HOAN KIEM DISTRICT, HANOI 越南
Tel: +84-432009119/432009
Email: logistic@vietransjsc.vn
Web:

爱尔兰绿岛商务服务中心 / Good Ireland Business

1.1C2-20

Address: 爱尔兰 都柏林-Raheny-Main Street Ireland Dublin-Raheny-Main street
Tel: 00353894658618 / 003535894658618
Email: zhangyuan.ie@gmail.com
Web: www.youaierlan.com

Good Ireland服务公司是一家集会务策划，政府接待，公共运作，商业咨询，商务考察为一体的综合性专业商业服务公司，凭借卓尔不群的业务水平，现已成中国驻爱尔兰使领馆、爱尔兰各个政府部门和世界五百强的会议服务指定供应商。Good Ireland是服务于大企业、大客户的商务、会议、政府业务的专业公司，拥有一支经验丰富、素质出众高度敬业的团队，我们将一如既往的紧跟客户需求，与客户一道共创中国和爱尔兰合作的美好明天。
Good Ireland Business. is a public relationship Organisation which has been providing vital information, inspiration and motivation to the citizens of Ireland to start and manage their own business with China. Every year we organize a conference where we invite entrepreneurs around the city to discuss some tips and tools that will promote or help their business in China.

克劳利米勒律师事务所 / Crowley Millar Solicitors

1.1C2-17

Address: 爱尔兰 Ireland Dublin-Dublin-2/3 Exchange Place, Georges Dock, IFSC, Dublin 1
Tel: 0035316761100
Email: ping@crowleymillar.com
Web: www.crowleymillar.com

克劳利米勒律师事务所是一家充满活力、联系广泛并与国际接轨的律师事务所。我们有丰富的经验和专业知识为在中国开展业务的爱尔兰客户以及在爱尔兰投资的中国客户提供法律咨询与建议。我们的专业领域包括商业诉讼，房产交易，公司并购，投资移民等。
Crowley Millar Solicitors is a dynamic and well-connected firm with international links. The importance of our international practice is proven by our expertise in advising both Irish clients doing business in China and Chinese clients investing in Ireland. Our specialised area of practice includes Commercial Litigation, Property Transactions, Company Law, Immigrant Investor Programme etc.

TOEASY LIMILED

1.1C2-18

Address: 爱尔兰 Ireland都柏林-The Business Crntre, Fonthill Industrial Park,Fonthill Road, Dublin22,Ireland
Tel: 13911768922
Email: 83700700@qq.com
Web:

TOEASY主要从事风控型资管，并且设计了CNCDS发债模式，向中国进行介绍。

JSI Holdings B.V.

1.1C2-22

Address: 荷兰 Netherlands Zuid-Holland-The Hague-De Werf 11
Tel: +31(0)708209195
Email: charlie.xu@jsiholdings.com
Web:

JSI Holdings B.V. has invested in the construction and operation of GIA Trade and Exhibition Center (GIA) in the Netherlands. By applying the innovative model of "platform + window", GIA provides Sino-Europe enterprises a two-way cooperation platform for international trade and business.

Djibouti Ports and Free Zone Authority / Djibouti Ports & Free Zone Authority

1.1C2-24

Address: 吉布提 Djibouti Djibouti -PoBox: 197-Route de Venise
Tel: 0025321359070
Email: mohamed.aref@dpfza.gov.dj
Web: www.dpfza.gov.dj

Djibouti Ports & Free Zones Authority, the sole administrative interface in free zones, has established an environment conductive to business, where investors can find a complete range of services with its One Stop Shop and modern multimodal infrastructures synergy (ground-sea-air) to fit their activities.

和记港口集团有限公司 / Hutchison Port Holdings Ltd

1.1C3-01

Address: 香港地区 HongKong China-葵涌货柜码头南路四号货柜码头 Hong Kong Hong Kong-Terminal 4, Container Port Road South, Kwai Chung
Tel: 852-26197627
Email: gca@hutchisonports.com
Web: www.hutchisonports.com

和记港口集团有限公司（和记港口）是长江和记实业之港口及相关服务部门，全球领先的港口投资、发展及经营商。和记港口的全球网络分布于亚洲、中东、非洲、欧洲、美洲及澳大拉西亚等地，二十七个国家共五十二个港口。
Hutchison Ports is the port and related services division of CK Hutchison Holdings Limited (CK Hutchison). Hutchison Ports is the world's leading port investor, developer and operator with a network of port operations in 52 ports spanning 27 countries throughout Asia, the Middle East, Africa, Europe, the Americas and Australasia.

迪拜環球港務集團 / DP World

1.1C3-02

Address: 阿联酋 United Arab Emirates Dubai-LOB 17 5th floor Jebel Ali Free Zone
Tel: 85224895096
Email: vicky.peng@dpworld.com
Web: www.dpworld.com

迪拜環球港務集團 (DP World) 为了与客户共创更美好的未来，不断的追求实现更智能、更快速、更安全和更经济高效的解决方案来协助我们的客户在全球运输当中的需求。解决方案。迪拜環球港務集團在全球共投资超过78个货运码头及拥有超过36,000名员.迪拜環球港務集團 (DP World) 是全球领先的码头运营商之一，主要从事港口、内陆码头、游轮码头、工业园区、经济特区、物流和海事服务。

At DP World we enable smarter trade to make a better future for everyone. We help our customers move goods around the world in ways that are smarter, faster, safer and more cost-efficient. We have 36,000 people working at 78 terminals around the world. Our operations include ports & terminals, industrial parks,logistics and economic zones, maritime services and marinas.

宇航国际货运集团 / The Eternity Group

1.1C3-03

Address: 香港地区 香港九龙新蒲岗爵禄街33号Port33 17楼1-2室 Hong Kong Unit 1701-2, 17F, Port 33, 33 Tseuk Luk Street,San Po Kong, Kowloon, Hong Kong
Tel: 86-021-61226025-113
Email: casper@eiffsha.com.cn
Web: www.eternityintlgroup.com

宇航国际货运集团1989年成立于台湾，专注于亚太与拉丁美洲间的货物运输超过30年。依靠以人为本的理念、全面完善的网络、经验丰富的团队、量身定制的服务，使我们在亚太与拉丁美洲间筑起坚实可靠的桥梁，助力客户们的国际业务发展，获得了良好的声誉。

Eternity Group established its first office in 1989 Taipei and specialize in logistic service between Asia Pacific and Latin America over 30 years. With people-oriented concept, comprehensive network, experienced colleagues and tailormade service we built the solid bridge between continents strongly supported our customers' business development and won outstanding reputation in the industry.

安特卫普港 / Port of Antwerp

1.1C3-04

Address: 比利时 Belgium Antwerp Province -Antwerp -Zaha Hadidplein 1
Tel: 021 22502201
Email: jan.vanderborght@portofantwerp.com
Web: www.portofantwerp.com

安特卫普港位于欧洲中心区域，是独一无二的集海运、物流和工业为一体，产，供，销一条龙的欧洲第二大港口，也是通往欧洲腹地和全世界其他地区的一个重要门户。安特卫普港是多功能，活跃的经济活动并存的重要港口

The port of Antwerp is a unique maritime, logistical and industrial platform, ideally located in the heart of Europe in the immediate vicinity of producers and consumers. It is the second-largest port in Europe and an important gateway to the European hinterland and the rest of the world.

德国扬米勒威悉有限两合公司 / J. MÜLLER Weser GmbH & Co. KG

1.1C3-05

Address: 德国 Germany Brake-Neustadtstrasse 15
Tel: 00494401914423
Email: joerg.mueller@jmueller.de
joerg.kaplan@jmueller.de
Web: www.jmueller.de

德国扬米勒威悉公司是德国港口运营商里的港口服务专家，公司在德国布拉克港和不来梅港运营现代化的码头设施，专业从事各种货物的港口装卸、仓储和分拨等业务。

J. MÜLLER Weser – The spezialist among port service providers.

The company's modern terminal handling capacities in Brake and Bremen [Germany] specialize in the proper handling, storage and distribution of a variety of goods.

SOUTHEAST LOGISTICS VIETNAM COMPANY LIMITED

1.1C3-06

Address: 越南 Vietnam Ho Chi Minh-Ho Chi Minh-11th Floor, Saigon Prime Building, 107 - 111 Nguyen Dinh Chieu, Ward 06, District 03, Ho Chi Minh City, Vietnam
Tel: + 84 8 7109 9299
Email: yangjb@npsel.com
Web:

SELVN engages management team with rich International carrier / NVOCC background and supplemented by Multi-lingual team to ensure premium service quality & barrier-free communication will be provided to all hierarchies of clients to become one of the best performing Forwarding companies in optimizing Logistics cost / improving the International competitiveness & achieving better Financial result.

世华商贸发展股份有限公司

1.1C3-07

Address: 台湾地区 Taiwan China 台北市-台北市民生东路3段69号6楼
Tel: 886-2-2518-9556
Email: peggyluo0106@outlook.com
Web: www.bizeps.com.cn

世华商贸成立至今16年，营运范围涵括有:饭店、办公楼、商业不动产开发、餐饮、会展、旅行社、人力培训、物业管理等多元体系。

近年来为迎接两岸崭新商贸服务时代的来临，进一步以其多年来于两岸经营企业的经验整合归纳，于上海青浦规划一座现代化服务业的商贸桥头堡—世华中心。

世华中心提供行政、商务、生活三方面配套，协助海外中小型企业突破现况转型升级，并用创新的商业模式开发新市场。

Triple Tee Adventures Ltd

1.1C3-08(1)

Address: 乌干达 Uganda Uganda-Kampala-Plot 35,Martin Road ,old Kampala
Tel: 000 256772212865
Email: tripletee18@gmail.com
Web:

Triple Tee Adventures Ltd offers you a life changing Tourism - experience, as it strives to meet your expectations as a tourism buyer of Ugandan and East African tourism Services. When planning for a Wild life Safari, Forest walks, Cultural tours, Home Stay Safaris, Gorilla Trekking mountain climbing and Coffee tourism ,Mining Safaris to mention but a few ; we will always customize our tourism s.

TRANSTRAVEL SAFARIS

1.1C3-08(10)

Address: 肯尼亚 Kenya NAIROBI-NAIROBI
Tel: 768795799
Email: Info@transtravelsafaris.co.ke
Web:

We as Transtravel Safaris are a tour operations company based in Nairobi, Kenya. We have hands on experience in handling inbound and outbound holidays for both domestic tourists and international tourists from all over the world. We were created with the vision of sharing East Africa's most magnificent destinations areas that combine pristine, natural beauty, exotic birdlife ,incredible wildlife.

KIVU RETREAT

1.1C3-08(10)

Address: 肯尼亚 Kenya NAKURU-NAKURU-16105
Tel: +254 726 026 894
Email: stellakaranja@kivuresort.co.ke
Web: www.kivuresort.co.ke

The Perfect affordable getaway resort great for local and international tourists, individuals, families and groups with affordable tours to scenic Kenyan destinations.

Kenya Tru Nomads Tours Ltd

1.1C3-08(12)

Address: 肯尼亚 Kenya Mombasa-34238 - 80118
Tel: 254 703767896
Email: info@kenyatrunomadstours.com
Web:

"Kenya Tru Nomads Tours Ltd strives to provide a personalized service and the best possible experiences to groups and individual travellers. We are dedicated to providing the best African safari experiences possible and making dreams come true. Kenya Tru Nomads has the resources and hands-on experience to guide you through the wide array of destination possibilities. We focus on arranging custom-d.

Brogibro Safaris & Events Management Ltd.

1.1C3-08(13)

Address: 肯尼亚 Kenya Address P. O. BOX 22315, 00400
Tel: 254202603582
Email: ruth@brogibrotours.co.ke
Web:

Brogibro Safaris & Events Management Limited is an indigenous firm with the mission to excel in the industry of Tourism and Event Management, our policy is honesty in all dealings and it gears the company towards dealing with the best organizations.

Belo Luxury Safaris

1.1C3-08(14)

Address: 肯尼亚 Kenya Athi River-Africa House.Namanga Road.
Tel: +254722413502
Email: topisia@belosafaris.com
Web:

"Belo Luxury Safaris is a small owner run company that prides itself in designing 100% tailored safari & beach holidays throughout Africa whilst staying in little magnificent places, even for the more economical traveller. Whether you are an individual, couple, family or group, we are confident that you will enjoy an expertly planned trip tailored to your specific interests and budget.

Southern-Expeditions C.L. / LatinAmerica Experiences

1.1C3-08(15)

Address: 厄瓜多尔 Ecuador Ecuador-Quito-Av. Eloy Alfaro N39-110
Tel: +59322898521
Email: pablo@latinexperiences.com
Web: www.latinexperiences.com

LatinAmerica Experiences is an Ecuadorian company operating high quality tourism services in the Andean region and South America. We design tailor-made tours based on our client's preferences and needs.

La Mar Media Lab S.A.S

1.1C3-08(16)

Address: 哥伦比亚 Colombia Bogotá-Chicó-carrera 11#95-75
Tel: +573154513336
Email: mariescobara@gmail.com
mariescobara@lamar.com.co
Web: www.lamar.com.co

La Mar Media Lab is a successful, award-winning producer of children animation series, including Ana the Pirate and Egon & Finx, focused on bringing unique content to a global audience through international co-productions.

Grupo Area Visual y compania S.A.S. (Areavisual)

1.1C3-08(18)

Address: 哥伦比亚 Colombia DC-Bogota-Calle 106 # 19 A 42 Ap 201
Tel: +573108603938
Email: dariosilva@areavisual.com
Web: www.areavisual.com

Areavisual is a creative content company. We create and produce state-of-the-art content for animation, television and live shows. We look to partner with animation and new media studios interested in co-developing and/or coproduce innovative animation, new media and live action series.

Inyarwanda Ltd

1.1C3-08(19)

Address: 卢旺达 Rwanda Kigali/Rwanda-City of Kigali-Kigali, Rwanda, Africa
Tel: +250 786036252
Email: smunyanziza@inyarwanda.com
Web: www.inyarwanda.com

Inyarwanda Ltd is a Rwandan registered company which runs a local website and International (Inyarwanda.com/inyarwanda English version) with the editorial of informing, educating and entertaining people through covering subjects ranging from technology, economy, tourism, culture, education, sports, entertainment and many more.

Preg-Tech Communication Ltd

1.1C3-08(2)

Address: 乌干达 Uganda Central-Kampala-Plot 15 Lugogo bypass
Tel: 256414666829
Email: slwanjo@preg-tech.co.ug
Web:

"Founded in 2006, Preg-Tech has diversified its portfolio into a full-scale IT systems consultancy with a commanding market position in the design and development of Management Information Systems facilitated by a 360° hardware and software sourcing service line across an array of sectors in East Africa. Specific services include: - ICT Strategic consulting, Business Process Automation, IT Sourci.

COMPUNET S.A.

1.1C3-08(20)

Address: 哥伦比亚 Colombia Valle del Cauca-Cali-CALLE 35N 6N bis 100 piso 3
Tel: (+572)4868484
Email: cesar.meneses@etixcali1.com
Web:

Group of companies with integrated solutions of technology for different business sectors such as retail, Hospitals, SAP Consulting services, Business process management, IAAS and private cloud services in a modern Data Center Tier IV in partenership with Etix Everywhere. Also is the mos t important SAP partner in Colombia.

Caribbean Island Properties Inc.

1.1C3-08(21)

Address: 巴巴多斯 Barbados Barbados-St. Thomas-13 Countryside, Vaucluse
Tel: 1 246 424 6633
Email: david@cipcaribbean
david@cipcaribbean.com
Web:

Caribbean Island Properties (CIP) is a Barbadian Real Estate company in Sales, Rentals and Property Management; with access to exclusive developments including Sandy Lane, Port Ferdinand, Royal Westmoreland and The Crane. With CIP, clients can purchase a property, have it managed, and benefit from holiday rentals income. They also have access to an attorney and accountant for financial advice.

The Axebridge Group

1.1C3-08(22)

Address: 巴巴多斯 Barbados The Grove, 21 Pine Road, Belleville, St. Michael, Barbados, BB11113
Tel: 1(246) 228-9886
Email: roland.jones@axebridge.com
Web:

Axebridge Group是一家私人持牌的财富，信托和企业服务公司，总部位于巴巴多斯。对客户成功企业的既得利益的关切让Axebridge认识到，只有在您的财富管理团队准备与您共同发展时，财富才会随之而来。

SuperTel Ltd

1.1C3-08(23)

Address: 孟加拉国 Bangladesh DHAKA-DHAKA-HOUSE # 25, GAREEB-E-NEWAZ AVENUE, SECTOR - 13, UTTARA, DHAKA
Tel: +8801755655241
Email: INFO@SUPERTEL.COM.BDCHAR
rabby@supertel.com.bd
Web: www.supertel.com.bd

Since our inception in 2008, SuperTel has become one of the fastest growing providers of IT/BPO/Call Center services. Headquartered out of Bangladesh with ISO 9001:2015 quality certification in Call Center, Back Office Support, BPO Services, E-Commerce and various BPO/KPO services.

Opus Technology Limited

1.1C3-08(24)

Address: 孟加拉国 Bangladesh Dhaka-Aminul Castle (2nd Floor) , 80/5 VIP Road, Kakrail
Tel: 88029345006
Email: jafar@opus-bd.com
Web:

Opus Technology Ltd is a leading Software Development and IT consulting service provider company. Combining unparalleled experience, domain expertise, best practices & comprehensive capabilities across various industries & business functions, it collaborates with customers to help them effectively address their operational challenges & grow their businesses stronger. Since beginning, Opus has cont.

janeton

1.1C3-08(3)

Address: 泰国 Thailand bangkok-Tharang,Bangkhen-90/48 Moo.Baan Golden Place Soi 3,Watcharaphon Rd.,
Tel: +66(0)2-153-0775
Email: janetontravel@hotmail.com
Web: www.janetontravel.com

珍晨旅游公司是一家具有14年经验的贸易与旅游服务公司。2015年正式在泰国国家旅游局注册备案成为国际旅游公司，其具有出境和入境旅游服务业务。注册许可号为：11/08064。珍晨旅游公司主要从事以下几项旅游业务：中高端私人订制、帆船和游艇租聘业务、泰国境内私人飞机租聘业务、商务旅游接待、会议会展旅游接待、自由行接待、教育旅游（夏令营及暑期亲子行程）、私人海岛出租、医疗旅游、商务咨询及开发服务、酒店及机票预订业务。其业务遍及泰国以下几个主要城市:曼谷及周边城市、芭提雅、华欣、象岛、尖竹汶、罗勇、北碧府、清迈、清莱、普吉岛、甲米、苏梅岛。

On Global Market SAC

1.1C3-08(4)

Address: 秘鲁 Peru Lima-Lima-Batallón Libres de Trujillo Norte 236 Surco
Tel: 511 976330797
Email: onoel@onglobalmarket.com
Web: www.onglobalmarket.com

Specialized in competitive intelligence, market research, technical requirements and quality, with wide experience at national and international level, committed to provide the best commercial consultancy service to our clients. We help companies that wish to internationalize their products, identifying real opportunities in global markets and we help them also to enter in Latin America countries.

People Performance Improvement Solutions Limited

1.1C3-08(5)

Address: 尼日利亚 Nigeria Lagos-Aperin House (3rd Floor) Plot 27, Budo Layout (Beside God is Good Motors) Ajiwe, Lekki - Epe Express Way Lagos.
Tel: +2348037131374
Email: chinyere.okpara@ppisconsulting.com
Web: www.ppisconsulting.com

People Performance Improvement Solutions Limited Provides Human Resources and Business Facilitation services for all business types and individuals wishing to enter the Nigerian market. We provide business facilitation services to overseas companies interested in doing business or collaborations in Nigeria.
We operate a number of groups, dedicated to the needs of specific market sectors.

Africa International Trade & Commerce Research

1.1C3-08(6)

Address: 尼日利亚 Nigeria Abuja-FCT-Centre Court 1, 46 Crescent, off 4th Avenue
Tel: +2348147429461
Email: msandy522@gmail.com
Web: www.africainternationaltrade.com

Africa International Trade &Commerce Research (AITCR) is an international trade consultancy firm for the African market that offers strategic services with the aim of supporting, facilitating & promoting trade and investment across Africa. Our services include Research, Trade and Investment facilitation, Policy, Commodity & Product sourcing & supply, in-country-representation and invest-in-Africa.

AUNTI TRAVELS

1.1C3-08(7)

Address: 尼泊尔 Nepal BAGMATI-KATHMANDU-NAYA BANESHWOR
Tel: 97714780712
Email: auntitravels@gmail.com
Web: www.auntitravels.com

SPECIALIZED IN PILGRIMAGE TOURS PROVIDING COMPREHENSIVE TRAVELS & TOURS SERVICES FOR GROUPS AND INDIVIDUALS, OUTBOUND, INBOUND. AND SPECIALIZED IN PILGRIMAGE TOURS. WE OFFER A DIVERSITY OF BEST SERVICES TO OUR CUSTOMERS.

星缅旅游有限公司 / SM Tours & Transport Co.,Ltd.

1.1C3-08(8)

Address: 缅甸 Myanmar Yangon-Yangon-No.75 (1st Floor) , Lan Thit Street , Lanmadaw Township
Tel: 95-1-225774
Email: smtours@gmail.com
Web: www.smmyanmar.com

“ SM Tours and Transport Co., Ltd. ”(星缅旅游有限公司，始于1994) 是缅甸最具人气、经验丰富的入境地接和组团社，是PATA、JATA以及缅甸旅游协会UMTA等组织成员.
“SM Tours & Transport Co.,Ltd.”(Est.1994) is one of the most client oriented and experienced inbound and outbound tours agents in Myanmar. Recognized by PATA, JATA and Union of Myanmar Travel Association.

Regal Mart International Sdn. Bhd.

1.1C3-08(9)

Address: 马来西亚 Malaysia Selangor-Ampang-28, Jalan 6, Ampang Ukay,
Tel: 01084568252
Email: lohweekeng@126.com
Web: www.malaysiabest.cn

We established in 2013, with the mission of bringing all good Malaysia products to China market, both services and consumable products. We have our own manufacturing facilities for durian products in Pahang. Besides that, we consistently export White coffee, snacks and food ingredients to China. On service sector, we assist Malaysia companies penetrate and develop China market.

シャンフー・ジャパン株式会社

1.1C3-11

Address: 日本 Japan 日本国东京都江东区丰州3-4-2
Tel: 021-60673038
Email: zhangchen@wlyuan.com.cn
Web: www.wlyuan.com.cn

シャンフー・ジャパン株式会社公司主要从事国内先进物流信息化平台的研发，致力于为物流上下游企业提供专业的物流信息化解决方案，并推动整个物流行业的信息化发展，以“物流科技，科技物流”为理念，围绕物联网、互联网、人工智能三大核心技术，为物流人打造了一个标准化、集约化、可视化、无纸化、智能协同的物流源平台。

香港一带一路文化体育产业有限公司 / HONGKONG BELT AND ROAD CULTURAL SPORTS INDUSTRY CO., LIMITED

1.1C3-14

Address: 香港地区 香港 Hong Kong ROOM 803,8/F.,YUEXIU BUILDING,160-174 LOCKHART ROAD,WANCHAI,HONGKONG
Tel: 13564042212
Email: jackie.zhong@msscycling.com
Web:

自2013年“一带一路”战略被提出，香港一带一路文化体育产业有限公司以香港2016年成功举办“一带一路”高峰论坛为契机，自2016年开始筹划一带一路自行车赛并最终在2018年12月9日成功在香港举办。赛事加上大湾区香港站，我司将推动一带一路自行车赛落户到大湾区各地，赛事定位将是职业赛。未来发展规划为为2019年赛事比赛进入中国内地，赛事日程增加至5日赛，从粤港澳大湾区出发延伸至全国各地。
Since the strategy of "the Belt and Road" was put forward in 2013, the Belt and Road Summit Forum was hold in Hongkong in 2016. Since then, it has been planning a cycling race and finally successfully held in Hongkong in December 9, 2018. We will promote the cycling race around the Tai Wan area, and the competition will be a professional race.

Gambia Tourism Board

1.1C3-16

Address: 冈比亚 Gambia KMC-Serrekunda-Bertil Harding Highway
Tel: 00220 9928266
Email: ahydra@gtboard.gm
Web:

Marketing and Promoting foreign and local investment in the Tourism Industry.

TANZANIA TOURIST BOARD

1.1C3-17

Address: 坦桑尼亚 Tanzania DAR ES SALAAM-P.O.BOX 2485
Tel: +255 22 2664867
Email: md@tanzaniatourism.go.tz
Web: www.tanzaniatourism.go.tz

TTB was legally established under the Tanzania Tourist Board Act, CAP 364 R.E. 2002 of the laws of the United Republic of Tanzania (TTB Act). With the general Function of promoting Destination Tanzania tourist attractions and service provides.

Duisburger Hafen AG - duisport

1.1C4-01

Address: 德国 Germany North Rhine Westphalia-Duisburg-Alte Ruhrorter Str. 42-52
Tel: +49 203 803 4281
Email: Heike.Koenen@duisport.de
Web: www.duisport.de

Duisburger Hafen AG owns and manages the Port of Duisburg, the world's largest inland port. For this port and logistics location, duisport offers full service packages in the area of infra- and suprastructure, provides logistics services, such as the development and optimization of transport and logistics chains, building management, packaging logistics and contract logistics.
www.duisport.de

Container Terminal Wilhelmshaven JadeWeserPort-Marketing GmbH & Co. KG

1.1C4-02(1)

Address: 德国 Germany Niedersachsen-26388 Wilhelmshaven-Pazifik 1
Tel: +49 4421 4098050
Email: a.bullwinkel@jadeweserport.de
Web: www.jadeweserport.de

Wilhelmshaven - Germany's only deep water port and the easternmost deep water port in the North Range, 160 hectares freight village behind the EUROGATE Container Terminal Wilhelmshaven, water depth of 18 metres, trimodal hinterland connections.

EUROGATE GmbH & Co. KGaA, KG

1.1C4-02(2)

Address: 德国 Germany Bremen-Präsident-Kennedy-Platz 1A
Tel: +49 421 1425 3891
Email: Shuangyan.Zhang@Eurogate.eu
Web: www.eurogate.eu

EUROGATE is the leading shipping line independent container terminal logistics group in Europe. The company operates a network of 13 container terminals at 11 locations from the North Sea coast to the Mediterranean area. In addition to container handling services at the seaports, EUROGATE offers intermodal transport and cargomodal services.

HAMBURG SÜD

1.1C4-03

Address: 德国 Germany Hamburg-59-65 Willy-Brandt-Strasse,20457 Hamburg, Germany
Tel: 86 21 23299092
Email: ciie@hamburgsud.com
Web: www.hamburgsud-line.com

- 147年的跨国航运集团，1871年成立于德国，集装箱巨轮航行于全球主要港口；
- 隶属于世界500强，自2017年底成为世界领先班轮运输公司的子公司；
- 全球250多家办事处提供专业和个性化的服务；

Hamburg Süd ranks among the ten largest container-shipping brands worldwide and is part of Maersk Line. Well-trained employees in 250 offices spread across more than 100 countries ensure that customers receive logistics solutions tailored to their individual needs. High quality standards, reliable service, a personal touch and sustainability are all integral parts of Hamburg Süd' s brand values.

加拿大国家铁路 / Canadian National Railway Company

1.1C4-05

Address: 加拿大 魁北克省-蒙特利尔-935 de La Gauchetiere Street West Canada Quebec-Montreal-935 de La Gauchetiere Street West
Tel: 21 58368850 / 21 5836 8850
Email: sheldon.hunt@cn.ca
Web: www.cn.ca

CN是您的综合供应链伙伴。我们凭借创新思维，以及与各方通力合作，成为北美洲运输服务业的领军人。我们提供一应俱全的货运方案，包括铁路运输、多式联运、卡车运输、货运代理、仓储和配送等。无论您选择使用CN长达31,200公里的铁路网络，通过我们在三大海岸连接的多个港口进行全球货运，还是通过我们网络内超过23处位于战略性地点的多式联运站为您服务，我们都能为您接通最关键的环节。
CN is your integrated supply chain partner. We are a leader in the North American transportation services industry, driven by innovation and collaboration. We offer complete shipping solutions, including rail, intermodal, trucking, freight forwarding, warehousing and distribution. Whether you're shipping across CN' s 31,200 km rail network, globally through the many ports we service on three coasts.

矿用设备及工具华星资本集团股份有限公司 / Mining Tools and Equipment Factories Capital Group FASING Plc.

1.1C4-07(3)

Address: 波兰 Poland Katowice-ul. Modelarska 11
Tel: +86 (010) 6553 9794
Email: pburdelski@fasing.com.pl
Web: www.fasing.pl

波兰华星集团是世界上最大的矿用链条生产企业，拥有波兰“FASING”和德国“KBP”两大世界品牌。主要产品为链条、接链环、刮板等刮板输送机用组链装配。公司产品主要用于采矿业、能源、运输、捕鱼、制糖、水泥等行业。华星中波（北京）矿用设备及工具有现公司是华星集团的全资子公司，其业务主要集中在向中国市场的矿用设备销售。
Capital Group FASING Plc. and KBP Becker Prünte are the biggest mining link chain producers in the world. Our two factories are located in Poland and Germany. We are manufacturers of chain assemblies, chains, connecting links and flight bars used in mining chain conveyors. The Group products and its solutions find their use in mining industry, energy sector, lifting and transportation, etc.

汉堡港 / Port of Hamburg

1.1C4-04(1)

Address: 德国 Germany 20457 Hamburg-Pickhuben 6
Tel: +49 40 37709 0
Email: info@portofhamburg.com
Web: www.portofhamburg.com

汉堡港在2018年处理约1.35亿吨海运货物，包括约870万个集装箱。其中，大约超过260万个集装箱是发往或来自中国。汉堡是中国进出口商进入德国和东欧市场、以及俄罗斯和波罗的海诸国而提供最短路径的大门。各种货物都可以经由德国最大的港口被运送至目的港。大量的班轮业务保证了汉堡港与中国港之间的每天发运而超大型集装箱船每天都会停靠汉堡港。
The Port of Hamburg handled 135 million tons of seaborne cargo in 2018, including some 8.7 million containers (TEU). Of these, 2.6 million TEU were either headed to or coming from China. Hamburg is the gateway port for Chinese exporters and importers and is offering shortest distances to the German and Eastern European markets and to Russia and the Baltic Sea states.

Port of Gdansk Authority

1.1C4-07(1)

Address: 波兰 Poland 80-995 Gdansk-18 Zamknieta Str.
Tel: 18201796632
Email: shanghai@portgdansk
Web:

The Port of Gdansk Authority Spolka Akcyjna (i.e. Joint Stock Company) with its registered office in Gdansk, is a commercial partnership established in 1998 and operates based on the provisions of the Act on Seaports and Harbours and the Code of Commercial Companies. In that capacity, the Company follows the tradition of all its predecessor entities that used to manage the port grounds in Gdansk.

DEEP OCEAN TECHNOLOGY POLAND 有限公司 / DEEP OCEAN TECHNOLOGY POLAND SPOLKA Z.O.O.

1.1C4-07(4)

Address: 波兰 Poland Poland-GDYNIA-Zwyciestwa Avenue 96/98, E2.16, 81-451
Tel: +48 58 688 83 05
Email: info@deep-ocean-technology.com
Web: waterdiscus.com

Deep Ocean Technology Poland是一家波兰公司，其主要目标是为国内和国际客户开发潜水器技术产品，使客户能实现他们的目标。
Deep Ocean Technology Poland 最知名的产品是世界著名的水弧 (Water Discus)，主要用作水下酒店，亦可因应其它需要而进行改装。
Deep Ocean Technology Poland is a company whose main objective is to develop submersible technology products for domestic and international customers,who can use them to pursue their goals. The most recognizable product of Deep Ocean Technology Poland is the world acclaimed Water Discus,which is offered and promoted predominantly as an Underwater Hotel, but can be adapted to fit a number of needs.

Hamburger Hafen und Logistik Aktiengesellschaft

1.1C4-04(2)

Address: 德国 Germany 20457 Hamburg-Bei St. Annen 1
Tel: +49 40 3088 2235
Email: info@hhla.de
Web: www.hhla.de

Hamburger Hafen und Logistik AG (HHLA) is a leading European logistics company. We develop logistical and digital hubs with our customers for the transport flows of the future. In doing so, we focus on innovative technologies and sustainable solutions. The Group currently employs approximately 5,900 people.

Monika Blaszkowska moka design

1.1C4-07(2)

Address: 波兰 Poland Pomorskie-84-207 Bojano-Gryfa pomorskiego 1/3
Tel: +48501446322
Email: moka@migaloohome.com
Web: www.migaloohome.com

Design service - interior design - special medical design and object design. We have a division that is making decorative objects and furniture with the Baltic amber use also we developed technology that allows us to produce exclusive bespoke pieces of interior design items custom made for vip clients and luxury spaces . Internationally awarded in design.

Walbrzych Special Economic Zone INVEST-PARK

1.1C4-07(7)

Address: 波兰 Poland Dolno l skie-Wa brzych-Uczniowska 16 Street
Tel: +48 74 664 91 79
Email: m.tyszka@invest-park.com.pl
Web: www.invest-park.com.pl

The WSEZ "INVEST-PARK", which manages the investment area in south-western Poland from Wielkopolskie Province to Lower Silesia and Opolskie province, has already been chosen by over 250 international corporations and smaller companies, including Mercedes-Benz, Volkswagen, Toyota, IBM, 3M, Mondelez, Electrolux, Colgate-Palmolive, Bridgestone, Umicore, Capchem or Guotai-Huarong.

Poczta Polska SA

1.1C4-07(8)

Address: 波兰 Poland Mazowieckie-Warszawa-Rodziny Hiszpańskich 8
Tel: +48 887 334 178
Email: lukasz.symonik@poczta-polska.pl
Web:

Designated Postal Operator

PIRAEUS PORT AUTHORITY S.A.

1.1C5-01(01)

Address: 希腊 Greece Greece-Piraeus-10 Akti Miaouli Str.
Tel: +302104550226
Email: demenopoulosn@olp.gr
Web: www.olp.gr

Piraeus Port Authority S.A., established in 1930, has the management and operations of Piraeus Port, the largest port in Greece and one of the largest ports in the Mediterranean. The country' s geographical position makes it an ideal logistics hub especially between Asia and Central & Eastern Europe.

Orient Overseas Container Line Limited

1.1C5-01(04)

Address: 香港地区 HongKong China Hong Kong-Wanchi-31/F, Harbour Centre, 25 Harbour Road
Tel: 852-28333021
Email: ivy.lin@oocl.com
Web: www.oocl.com

OOCL is one of the world's largest integrated international container transportation, logistics and terminal companies. As one of Hong Kong's most recognized global brands, OOCL provides customers with fully-integrated logistics and containerized transportation services, with a network that encompasses Asia, Europe, the Americas, Africa and Australasia.

越南爱沃客有限公司 / IWORKU Viet Nam Company Limited

1.1C4-09

Address: 埃塞俄比亚 越南河内市河东郡万福坊安桥430号L3-07 Ethiopia L3-07 Gold Silk, Van Phuc, Ha Dong, Ha Noi, Viet Nam
Tel: 028-86283912
Email: lee@iworku.com
Web: vn.iworku.com

IWORKU (Vietnam) Co., Ltd 是 IWORKU旗下在越南的海外分支机构，是一家为全球企业了解和进入越南市场提供专业营销和咨询服务的本地化公司。越南分公司总部设立于首都河内，团队成员由越南本地专业的市场营销人才组成，并整合了越南各地的合作伙伴，服务涵盖从市场咨询，贸易撮合，客户关系维护到整体越南市场开发。
IWORKU (Vietnam) Co., Ltd., an overseas branch of IWORKU, is mainly to provide professional marketing and consulting services for global enterprises who wants to enter the Vietnam market. The service covers from market research, trade matching, customer relationship maintenance to market development in Vietnam.

CSP Iberian Valencia Terminal S.A.U.

1.1C5-01(02)

Address: 西班牙 Spain Valencia-Valencia-Muelle Principe Felipe s/n
Tel: 0034963352100
Email: jorti@cspspain.com
Web: www.cspspain.com

erminal strategically located in the Mediterranean (at the port of Valencia, Spain), the terminal enjoys a hub position in the main maritime routes connecting Spain and Europe with other continents. CSP Iberian Valencia Terminal S.A.U is an affiliated company of COSCO SHIPPING Ports (Spain) Terminals S.L.U. (CSP Spain).
Strategically located in the Mediterranean (at the port of Valencia, Spain), the terminal enjoys a hub position in the main maritime routes connecting Spain and Europe with other continents.

COGENT HOLDINGS

1.1C5-01(05)

Address: 新加坡 Singapore Singapore-Singapore-1 Buroh Crescent #6M-01 Singapore 627545
Tel: 65015840
Email: shina.cai@sh-cogent.com.sg
Web: www.cogentholdingsltd.com

高昇集团在新加坡有约四十年的历史，是目前领先的综合型物流服务供应商，提供优质的一站式物流解决方案。高昇集团拥有目前新加坡最大的综合物流中心之一，名为高昇1站式物流中心。这座地标建于2014年，高度超过110米，相当于一栋40层高的住宅楼。它也是全球独一无二的拥有空中集装箱中转站和5层坡道式专用仓储空间的物流中心。所谓的一站式物流服务是综合了我们主要业务，分别为运输，集装箱堆场，汽车物流，仓储以及货运代理。

加拿大创业协进会 / Association of Chinese Canadian Entrepreneurs

1.1C4-10

Address: 加拿大 Canada Ontario-Markham-3950 14th Avenue, Suite 502
Tel: 905-479-2802
Email: awards@acce.ca
Web: www.acce.ca

創業協進會（ACCE）成立於1994年，為非牟利志願團體。本會宗旨是促進加國華裔的企業精神，加強加國華裔企業在全球市場上的競爭力；表揚加國華裔企業家之貢獻；鼓勵加國華裔創業；提倡企業家的社會責任感。
Founded in 1994, the Association of Chinese Canadian Entrepreneurs (ACCE) is a national, not-for-profit organization focusing on entrepreneurship. The mission of ACCE is to promote entrepreneurship in the Chinese Canadian community; to recognize the contribution of Chinese Canadian entrepreneurs; to encourage new business start-up; and to promote social responsibility in entrepreneurs.

Port of Zeebrugge

1.1C5-01(03)

Address: 比利时 Belgium West-Flanders-Zeebrugge-Isabellalaan 1
Tel: 0032 50502531
Email: Simon.song@cspterminals.com
Web: www.portofzeebrugge.be

The port of Zeebrugge is one of the world's foremost roll-on/roll-off and deep-sea container ports, where over 40 million tonnes of goods are transhipped annually. With the state-of-the-art container terminal of COSCO SHIPPING Ports, Zeebrugge has evolved into an ultramodern transit & logistic platform which is completely at the service of the European and intercontinental markets.

PJSC TransContainer

1.1C5-02

Address: 俄罗斯 Russia Russian Federation-Moscow-19, Oruzheyniy pereulok
Tel: +7 (495) 788-17-17
Email: trcont@trcont.com
Web: www.trcont.com

JSC TransContainer is the leading intermodal container transportation company in Russia. The Company's accounted for approximately 42% of Russia's rail container transportation market and about 17% of the rail-sidecontainer terminal handling market in Russia.

MESSE FRANKFURT GMBH

1.1C5-03

Address: 德国 Germany 60327 Frankfurt am Main-Ludwig-Erhard-Anlage 1
Tel: + 49 69 75 75 59 05
Email: markus.quint@messefrankfurt.com
Web:

法兰克福展览集团是全球最大的拥有自主展览场地的展会主办机构，其业务覆盖展览会、会议及活动。多元化的服務呈現在活動現場及網路管道的各個環節，確保遍布世界各地的客戶在策劃、組織及進行活動時，能持續享受到高品質及靈活性；可提供的服務類型包括租用展覽場地、展會搭建、市場推廣、人力安排以及餐飲供應。集團總部位於德國法蘭克福市，由該市和黑森州政府分別控股60%和40%。
Messe Frankfurt is the world's largest trade fair, congress and event organiser with its own exhibition grounds. The wide range of services includes renting exhibition grounds, trade fair construction and marketing, personnel and food services. With its headquarters in Frankfurt am Main, the company is owned by the City of Frankfurt (60 percent) and the State of Hesse (40 percent).

Kumport Port Services and Logistics Industry and Trade Inc.

1.1C6-02(1)

Address: 土耳其 Turkey Istanbul-Beylikduzu-Marmara Mah. Liman Cad. No:43 34524
Tel: +90 2128668300 /8521
Email: tbaran@kumport.com.tr
Web:

Kumport employs the most advanced technologies and the equipments of the highest productivity in its operations. 468.800 sqm of total area, 2.228m total quay length, 16.5 m draft, 24 row outreach quay cranes make Kumport one of the most capable terminal in Turkey.

International Djibouti Industrial Parks Operaiton FZCO

1.1C6-02(5)

Address: 吉布提 Djibouti Djibouti-Pk 23
Tel: +253 77044239
Email: liuxiang@cmdiftz.com
Web: www.diftz.dj

吉布提国际自贸区运营公司负责建设、管理、运营吉布提国际自贸区。吉布提国际自贸区是在吉布提政府的支持合作下，由招商局集团发挥“百年招商”优势，积极投入自贸区的开发、建设、管理和运营。园区运营商将以吉布提作为“丝路驿站”试点，复制国内园区成功经验，探讨“前港-中区-后城”的综合开发模式，为中国产品、产业、服务“走出去”搭建平台，为中国中小企业“走出去”提供全方位支持和服务。
吉布提国际工业园区运营有限公司负责建设、管理、运营吉布提国际自贸区。吉布提国际自贸区是在吉布提政府的支持合作下，由招商局集团发挥“百年招商”优势，积极投入自贸区的开发、建设、管理和运营。园区运营商将以吉布提作为“丝路驿站”试点，复制国内园区成功经验，探讨“前港-中区-后城”的综合开发模式，为中国产品、产业、服务“走出去”搭建平台，为中国中小企业“走出去”提供全方位支持和服务。

Informa Markets

1.1C5-04

Address: 英国 SW1P 1WG-伦敦-5 Howick Place United Kingdom SW1P 1WG-London-5 Howick Place
Tel: 01057306245 / +861057306245
Email: hellen.zhang@ubm.com
Web: www.informamarkets.com

Informa Market是全球领先的会展主办方，为各行各业和专业市场提供交易、创新和发展平台。业务包括550多个国际B2B活动和品牌，涵盖多个领域，包括医疗、保健与制药，基础设施，建筑及房地产，时尚服饰，酒店、食品与饮料及健康与营养等。
Informa Markets is the world's leading exhibitions organiser, our portfolio is comprised of more than 550 international B2B events and brands in markets including Healthcare & Pharmaceuticals, Infrastructure, Construction & Real Estate, Fashion & Apparel, Hospitality, Food & Beverage, and Health & Nutrition, among others.

China Merchants China-Belarus Commerce & Logistics Corporation, CJSC

1.1C6-02(2)

Address: 白俄罗斯 明斯克-明斯克-白俄罗斯明斯克市中白工业园华商商务中心 Belarus Minsk-Minsk-China Merchants Business Center, Great Stone Industry Park, Minsk, Belarus
Tel: +375 29 3207989
Email: zhangwei2@cmhk.com
Web: www.cm-cb.com

中白商贸物流股份有限公司提供中欧班列、国际海运、合同物流、国际空运和跨境电商等四类物流服务，并发挥中白商贸物流园的设施优势（展示交易中心、商务中心、仓储中心、海关站），为客户提供“前店后仓”、“展贸结合”的一体化商贸物流解决方案。
China Merchants China-Belarus Commerce & Logistics Corporation (CMCB) provides Eurasian Train, International Shipping, Contract Logistics, International Air Transportation and Cross-border E-commerce.

老挝万象赛色塔运营管理有限公司 / Laos Vientiane Saysettha Operation Management Co.,Ltd.

1.1C6-02(6)

Address: 老挝 万象-赛色塔区-友谊路，纳诺村 Laos Vientiane-Saysettha District-Youyi Rd.Nano Village
Tel: +856-21-766012
Email: fenglin@cmhk.com
Web: lvsdz.com

老挝万象赛色塔运营管理有限公司由老中联合投资有限公司与青岛港招商局国际集装箱码头有限公司于2018年8月合资成立，公司负责赛色塔综合开发区的运营管理工作。
Laos Vientiane Saysettha Operation Management Co., Ltd., was jointly funded by Lao-ChinaJoint Venture Investment Co., Ltd. and Qingdao Port Merchants International Container Terminal Co., Ltd. in August 2018. The company is responsible for the operation and management of the Saysettha Development Zone.

UPS

1.1C6-01

Address: 美国 佐治亚州-亚特兰大市-美国 United States of America GA-Atlanta-USA
Tel: 02138102937
Email: pyiren@ups.com
Web: www.ups.com/cn/zh/home.page

UPS（United Parcel Service, Inc. 美国联合包裹运送服务公司）成立于1907年，总部设于美国佐治亚州亚特兰大市，是全球领先的物流企业；服务范围遍及全球220多个国家和地区，拥有45.4万名员工。2018年UPS营业额达到720亿美元。自1988年进入中国以来，UPS致力于为各类客户提供全方位的物流服务，助力中国市场更好地与全球市场连接。
Founded in 1907 and headquartered in Atlanta, Georgia, UPS is a global leader in logistics and has its presence in over 220 countries and regions with 454,000 employees. In 2018, its turnover has reached 72 billion dollars.UPS entered the China market in 1988, providing solutions for customers in multiple industries, helping promote the connectivity between the Chinese market and the global market.

Hambantota International Port Group (Private) Limited

1.1C6-02(4)

Address: 斯里兰卡 Sri Lanka Hambantota-Mirijjawila-Hambantota Maritime Center
Tel: +94 472 888 888
Email: henry.liu@hipg.lk
Web: www.hipg.lk

Located ten nautical miles from the global East to West trade route, the Hambantota International Port is the only deep draft, multi-purpose port in Sri Lanka. The port will provide a variety of services including container, break bulk, Ro-Ro, bunkering, cruise, oil, bulk terminal, gas and project cargo.

Tin-can Island Container Terminal Limited

1.1C6-02(7)

Address: 尼日利亚 Nigeria Lagos-Lagos-1/3 Point Road, Apapa-Lagos
Tel: +234 703 406 0460
Email: Etienne.ROCHER@tigt-ng.com
Web: www.tict-ng.com

庭堪岛集装箱码头有限公司（TICT）于2006年成立，尼日利亚当局已将庭堪岛B码头授予TICT，股东方为博洛雷港口，招商局港口有限公司和中非发展基金。
Tin-can Island Container Terminal Limited (TICT) has been established since 2006. The Nigerian Authorities have granted Tincan Island Port main Container Terminal (Terminal B) to TICT, a consortium made up of Bollore Ports, China Merchants Port (CMPort) & China Africa Development Fund (CADF).

Colombo International Container Terminals Liimited

1.1C6-02(8)

Address: 斯里兰卡 Sri Lanka Colombo-Port of Colombo, #120/20, Marine Drive Road
Tel: 0094112666888
Email: john.zheng@cict.lk
Web: www.cict.lk

CICT is the first and only Deepwater terminal in South Asia capable of handling the largest vessels afloat. CICT is the first Greenfield project of China Merchant Port Holdings. CMPH is currently one of the largest Port Operators in the world with a vast network across the globe, giving CICT to limitless access to a strong global footprint.

DHL Global Forwarding

1.1C6-04(2)

Address: 德国 Germany Nordrhein-Westfalen-Bonn-Post Tower
Tel: 23068329
Email: michelle.wangh@dhl.com
Web: www.logistics.dhl

DHL全球货运（DHL Global Forwarding）是DHL旗下的货运物流板块，自1815年至今已有200多年的历史，在国内与国际海陆空货运及工业供应链管理等领域提供专业物流服务。我们为新兴市场及众多行业如科技业、生命科学和医疗保健业、新能源行业、汽车行业和零售业等提供定制化的解决方案。
DHL Global Forwarding (DGF) is focusing on the playground of the national and international freight forwarding service, with a history over 200 years since 1815. As a leading provider in air, sea and road freight industry, DGF is offering specialized solutions for growth markets and industries including technology, life sciences and healthcare, energy, automotive and retail.

Messe München GmbH

1.1C6-07

Address: 德国 Germany Am Messesee 2.81829 München.Deutschland / Germany
Tel: 021-20205651
Email: donna.tang@mm-sh.com
Web: messe-muenchen.de/en

慕尼黑博览集团作为知名的全球性展览公司，拥有50余个品牌博览会，涉及资本产品、消费品和高新科技三大领域。集团每年在慕尼黑展览中心、慕尼黑国际会议中心、慕尼黑会展与采购中心举办逾200场展会，共吸引5万余家参展商及300余万名观众齐聚现场。慕尼黑博览集团及旗下子公司的各类专业博览会遍及中国、印度、巴西、俄罗斯、土耳其、南非、尼日利亚、越南和伊朗。此外，集团的业务网络覆盖全球，不仅在欧洲、亚洲、非洲及
Messe München is one of the leading exhibition organizers worldwide with more than 50 of its own trade shows for capital goods, consumer goods and new technologies. Every year, a total of over 50,000 exhibitors and around three million visitors take part in more than 200 events at the exhibition center in Munich, at the ICM – Internationales Congress Center München and the MOC Veranstaltungscenter.

万海航运股份有限公司

1.1C6-03

Address: 台湾地区 Taiwan China 台北市-中吉里002邻松江路136号10楼
Tel: 021-63526220
Email: ciie@wanhai.com
Web: www.wanhai.com

万海航运创立于1965年2月24日，54年来深耕亚洲，展望全球，营运网络遍及全球近32个国家与地区及102个办事处，提供共91条定期航线。万海的营运据点已遍布新加坡、马来西亚、越南、泰国、菲律宾、印度尼西亚、缅甸、柬埔寨、中东国家、印度等一带一路沿岸的重要国家。

CECZ LLC

1.1C6-05

Address: 匈牙利 Hungary Budapest-Budapest-Szentmihalyi ut 171
Tel: +8618698848135
Email: chenxi@cecz.org
Web:

中欧商贸物流合作园区位于匈牙利布达佩斯市，规划总投资2亿欧元，园区以“一区多园，两地展示，双向代理 内外联动”建设模式，以建成中国商品交易展示中心、切配尔港物流园、德国不来梅港物流园。搭建起中国企业进入欧洲的商贸和物流平台。
CECZ is located in Budapest, the capital city of Hungary. The total amount invested into the project is 200 million Euros.The construction model of a " single zone" comprises many premises with commercial and logistics parks, showrooms at two sites, bilateral representation, internal and external connections".

Deloitte Advisory(HongKong) Limited

1.1C7-01

Address: 英国 United Kingdom London-1 New Street Square London, EC4A 3HQ United Kingdom
Tel: 33138369
Email: kiteng@deloitte.com
Web: www.deloitte.com

Deloitte is the largest professional services firm globally, with a history of 174 years. Deloitte's service network covers more than 150 countries and territories, employing approximately 286,200 professionals. Deloitte is committed to providing a wide spectrum of professional services including audit & assurance, consulting, risk advisory, financial advisory, and tax & business advisory.

DHL Express

1.1C6-04(1)

Address: 德国 Germany Bonn-Bonn-Charles-de-Gaulle-Str. 20
Tel: 862155504500
Email: shanshan.gu@dhl.com
Web: www.cn.dhl.com

DHL是全球物流行业领先品牌。DHL各事业部提供完整的物流服务系列，包括国内和国际包裹递送、国际快递等多个业务单元。DHL在全球超过 220 个国家和地区拥有约 38万名员工，将世界各地的个人和企业安全可靠地连接起来，实现全球贸易流。凭借针对增长型市场和行业的专业解决方案，对企业责任的坚定承诺，以及在发展中市场中坚实的地位，DHL被公认为“服务全世界的物流公司”。
DHL is the leading global brand in the logistics industry. Our DHL family of divisions offer an unrivalled portfolio of logistics services ranging from national and international parcel delivery, international express, etc. With about 380,000 employees in more than 220 countries and territories worldwide, DHL connects people and businesses securely and reliably, enabling global trade flows.

一般社团法人亚洲品牌自由贸易促进会 / AFPA

1.1C6-06

Address: 日本 大阪府-大阪市-平野区平野东3-7-20 Japan Osaka-Fu-Osaka-Shi-3-7-20, Hiranohigashi, Hirano-ku
Tel: +86-133-0652-6283
Email: 57562664@qq.com
Web:

一般社团法人亚洲品牌自由贸易促进会（简称AFPA）是为了促进日本与中国为核心的亚洲各国家地区之间的品牌商品自由贸易等经济活动、以及各种文化交流活动而成立的非营利性团体，总部设在大阪。AFPA的主要成员均为以亚洲贸易、中国一带一路及相关商业活动为主要业务内容的企业。
Asia Brand Free Trade Promotion Association（AFPA）is a non-profit organization established to promote economic activities such as free trade of brand goods mainly between Japan, China and other Asian countries, it also provides opportunities of various cultural exchanges and activities. Its headquarters is in Osaka. The main members of AFPA are all enterprises mainly doing Asian Trade.

GARANTIPLAST AMBALAJ GERI KAZANIM SAN. VE TIC. LTD. STI

1.1C7-02(1)

Address: 土耳其 Turkey DILOVASI-KOCAELI-KOSELER MAH. SUKURTEPE SOKAK NO:90/1 DILOVASI KOCAELI
Tel: 262 728 11 16
Email: h.karakus@garantiplastik.com
Web: www.garantiplastik.com

PLASTIC RECYLING COMPANY

Istanbul Chemicals and Chemical Products Exporters' Association (IKMIB)

1.1C7-02(3)

Address: 土耳其 Turkey stanbul-Sanayi Caddesi Cobancesme Mevkii Dis Ticaret Kompleksi No:3 A Blok Yenibosna/Bahcelievler
Tel: +902124540000
Email: seyma.inam@immib.org.tr
Web: www.ikmib.org.tr

Istanbul Chemicals and Chemical Products Exporters' Association (IKMIB) is a professional establishment which deals with all of the export activities of its members. The main aim of the Association is to increase the export volume of Turkish Chemicals and Chemical Products Sector. IKMIB bolsters its members in the national and international level via different activities.

AOL EXPRESS PTY LTD

1.1C7-03

Address: 澳大利亚 Australia HOMEBUSH WEST NSW-UNIT E1 350 PARRAMATTA ROAD
Tel: 86-20-62981486
Email: ying.liu@topideal.com.cn
Web: www.topideal.com.cn

Top Ideal是一家以信息化为特征，以现代服务业为核心，集跨境电商、物流供应链、国际贸易、信息服务、码头仓配及供应链金融六大业务板块于一体的外贸综合服务集团，创立于1997年。秉承“以服务促进交易”的宗旨，在提供全链路跨境供应链服务的基础上，以标准化、服务化的共享理念形成中台服务的模式，整合产业链资源，形成赋能品牌商和渠道商的“跨境+”服务模式，为各类客户提供数字化贸易的整套跨境解决方案。
Top Ideal was established in 1997. Top Ideal, is an integrated foreign trade service group which takes the informatizationas the characteristic and modern service as the core. The business scope cross-border e-commerce, logistics supply chain, international trade, information services, terminal / warehousing and supply chain finance.

Fiera Milano S.p.A.

1.1C7-04(1)

Address: 意大利 Italy S. S. del Sempione, 28, 20017 Rho (Milano), Italia
Tel: +86 21 50456700
Email: lin.li@hmf-china.com
Web: www.hmf-china.com

意大利米兰展览集团成立于1920年，是目前唯一的一家在意大利证券交易所上市的展览公司，负责管理和运营米兰国际展览中心新馆和米兰城市馆。米兰国际展览中心室内面积达34.5万平方米，是全球功能最齐全的展览中心之一。公司举办的展览会涵盖众多行业领域，包括时尚、家具、家居、仪器器械、旅游、酒店产品、食品、工业和能源、建筑和艺术。公司还在中国、印度、巴西、南非和泰国设立子公司、并寻求国际化发展的合作伙伴。

Deutsche Messe AG德国汉诺威展览集团

1.1C7-04(2)

Address: 德国 Germany Niedersachsen Hannover Messegelaende
Tel: +86 21 50456700
Email: henry.wang@hmf-china.com
Web: www.hmf-china.com

作为世界十大和德国五大展览公司之一，德国汉诺威展览集团成立于1947年，拥有世界顶尖的展览馆--汉诺威展览中心，总面积达到100万平方米，净可展出面积46.61万平方米，基础设施一流。公司拥有1,200多名员工，并已建立58个销售合作伙伴网络，业务遍及约100个国家。公司旗下拥有包括Hannover Messe（工业技术）、Domotex（地面铺装及材料）、Ligna（木工机械）、Interschutz（消防救援）等世界顶级展会。

雅式展览服务有限公司 / Adsale Exhibition Services Ltd.

1.1C7-05

Address: 香港地区 北角渣华道321号6楼 Hong Kong 6th Floor, 321 Java Road, North Point
Tel: 852-28118897
Email: winnieleung@adsale.com.hk
Web: www.adsale.com.hk

雅式于1978年在香港成立，已被业界公认为亚洲最具创新性和以结果为导向的展览服务领导者之一。雅式每年举办50多场展览会及会议，吸引来自全球超过150个国家及地区、数以十万计的中外专业观众。我们所具备的实力能充分满足中外买家和参展商的多元化需求。
Established in Hong Kong in 1978, Adsale has been widely regarded as Asia's most innovative and results-driven trade promotion leader in its field. Attracting hundreds of thousands of trade visitors from over 150 countries and regions to over 50 exhibitions and events annually, we're ideally qualified to meet the diversified needs of both international and local buyers and exhibitors.

National Academy of Sciences of Belarus

1.1C7-06(1)

Address: 白俄罗斯 Belarus Minsk-Independence Ave. 66,
Tel: +375172842816
Email: nasb.expo@gmail.com
Web: www.nasb.gov.by

The National Academy of Sciences of Belarus is the highest state scientific organization of the Republic of Belarus. It organizes and coordinates fundamental and applied research performed by all subjects of scientific activities; conducts fundamental and applied research and developments in crucial areas of natural and technical sciences, humanities, arts, and social sciences.

State Scientific Institution “Centre for System Analysis and Strategic Research”

1.1C7-06(13)

Address: 白俄罗斯 Belarus Minsk-Academicheskaya str., 1
Tel: +375172841892
Email: maryia.krauchanka@yandex.by
Web: center.basnet.by/index.htm

Elaboration of long-term forecasts of the development of the "science-technology-innovation" (STI) system. Development and evaluation of business plans, feasibility studies and investment proposals. Performance of basic and applied R&D in priority areas of scientific and technological activities. Scientific and organizational support of technology transfer.

国家机构“巨石”中白工业园管委会” / State Institution “Great Stone China-Belarus Industrial Park Administration”

1.1C7-06(14)

Address: 白俄罗斯 222210, 白俄罗斯，明斯克州，斯莫列维奇区，“巨石”中白工业园，北京大街18号 Belarus 222210, Minsk region, Smolevichi district, Great Stone China-Belarus Industrial Park, Pekinski Ave, 18
Tel: +375 17 517-28-86
Email: marchuk@industrialpark.by
Web: www.zbgyy.cn/industrialpark.by/en/home.html

国家机构“巨石”中白工业园管委会”是“巨石”中白工业园的管理主体，负责园区的政策制定，招商并注册入园企业，企业服务等。
State Institution “Great Stone China-Belarus Industrial Park Administration” is the governing body of the Great Stone China-Belarus Industrial Park which is responsible for the management of the development of the park, attraction and registration of residents and investors and their comprehensive services.

中白工业园区开发股份有限公司 / Industrial Park Development Company

1.1C7-06(16)

Address: 白俄罗斯 明斯克州-斯莫列维奇区-中白工业园北京大街18号 Belarus 18 Pekinskii Ave, Industrial park "Great Stone" Belarus 222210
Tel: +375175911970
Email: linyunlong@industrialpark.by
Web: www.zbgyy.cn

中白工业园区开发股份有限公司(简称“合资公司”)，于2012年8月27日成立，是中白工业园的开发商，主要负责园区土地的开发与运营、招商引资和物业管理。
Industrial Park Development Company, CJSC (abbreviation: JV) was established on August, 27, 2012. It is the developer of China-Belarus Industrial Park and is mainly responsible for the development and operation of the park's land, investment attraction and estate management.

State Committee on Science and Technology of the Republic of Belarus

1.1C7-06(17)

Address: 白俄罗斯 Belarus Minsk-Akademitcheskaya str., 1
Tel: +375 17 284 03 14
Email: Sinukovich@gknt.gov.by
Web: www.gknt.gov.by

The State Committee on Science and Technology of the Republic of Belarus is a national State govering body carrying out the State policy, excercising control in the areas of scientific-technical and innovation activities and in the sphere of rights protection of intellectual property objects and coordinating the activities of other national State govering bodies in the mentioned ares.

INSTITUTE OF PHILOSOPHY OF THE NATIONAL ACADEMY OF SCIENCES OF BELARUS

1.1C7-06(2)

Address: 白俄罗斯 Belarus Minsk-Surganova, 1/2
Tel: +375 17 2949111
Email: institute@philosophy.by
Web: philosophy.by/en

Institute of Philosophy is a specialized research institution, organizing and coordinating the research in the field of philosophy and related scientific disciplines, carrying out an expert examination of scientific projects and public initiatives. The Institute accepts internships for students, undergraduates and graduate students from foreign countries.

The Ministry of Transport and Communications of the Republic of Belarus

1.1C7-06(7)

Address: 白俄罗斯 Belarus Minsk-Chicherina street, 21
Tel: +375172936447
Email: io@niit.by
Web: www.mintrans.gov.by

The Ministry of Transport and Communications of the Republic of Belarus implements state regulation and management in the field of road, sea transport, inland waterway, railway transport, civil aviation and airports, road activities, activities of legal entities and individual entrepreneur that carry out transportation and forwarding activities, as well as other works in the transport activity.

DEMAGE EUROPE SP.Z.O.O.

1.1C7-07

Address: 波兰 Poland POLAND-POZNAN 61-297-OS.LCHA.NO 90/3
Tel: 021-51089939-282
Email: 282@demage.com
Web: www.demage-europe.com

DEMAGE EUROPE SP.Z.O.O是一家引领城市发展的城市文化产业运营专家,以定制化设计为核心，打造城市重大文化综合性项目。模型云是为设计师服务的3DMAX模型综合素材分享网站，通过相关模型以及展会现场照片，积极为设计师提供高品质参考。
DEMAGE EUROPE SP.Z.O.O. is an expert in the operation of urban cultural industry, which leads the development of cities. With customized design as the core, DEMAGE EUROPE SP.Z.O.O is a major comprehensive project of urban culture. Model cloud is a comprehensive material sharing website of 3D MAX model for designers. It actively provides high quality reference for designers through relevant models.

株式会社 行云贸易

1.1C7-08

Address: 日本 Japan 東京都豊島区北大塚2-7-1
Tel: 0755-22671641
Email: li.zhen@xyb2b.com
Web: www.xyb2b.com

“行云全球汇”跨境电商平台是领先的跨境进口货源分销平台，主流大型电商平台的核心进口货源供应商，向中国跨境中小企业提供代采、分销及供应链贸易融资解决方案的一站式云供应链服务，致力于成为最有价值的进口商品线上分销平台。
株式会社 行云贸易依靠公司强大的资金和技术优势，整合物流、商流、资金流，为客户提供一站式跨境贸易服务。
品牌平台“行云全球汇”跨境电商平台是领先的跨境商品综合服务平台，公司秉承诚信、专业、创新的企业精神，向中国进口零售企业提供代采、分销及供应链贸易融资解决方案的一站式云供应链服务，致力于成为最有价值的跨境商品综合服务平台。

PANAMA COLON CONTAINER PORT INC.

1.1C8-01

Address: 巴拿马 Panama 科隆省-巴拿马市-玛格丽特岛，可可索洛，克里斯托瓦尔区
Tel: 0633-2660606
Email: 737123168@qq.com
Web:

巴拿马玛岛港是岚桥集团港口物流产业核心枢纽港口之一，是岚桥集团践行“一带一路”倡议，布局海外枢纽港口的最新成果。玛岛港于2017年6月7日开启扩建工程，现为巴拿马最大在建工程、最大中资项目、规划吞吐能力最大的国际集装箱中转港口。玛岛港现已成为“一带一路”倡议向美洲辐射延伸的桥头堡，对完善“一带一路”重要海上合作支点，积极构建“海上经济走廊”，实现“一带一路”沿线港群协同发展具有积极意义。

香港聯瑞知識產權集團有限公司 / HONG KONG UTC INTELLECTUAL PROPERTY (HOLDINGS) LIMITED

1.1C8-02

Address: 香港地区 中西区-金鐘-力寶中心二座1105 Hong Kong Central and Western District-Admiralty-Room 1105, Tower 2, Lippo Centre
Tel: +852 2185 7848
Email: zhanglili@wtoip.com
Web: en.wtoip.com

香港聯瑞知識產權集團有限公司作为一家领先的知识产权与科创云平台，开创知识产权运营领域线上线下融合新模式，运用人工智能、大数据、物联网等新兴技术，整合线上线下、国内外资源与服务。公司网址：en.wtoip.com/
HONG KONG UTC INTELLECTUAL PROPERTY (HOLDINGS) LTD in association with its online platform en.wtoip.com, serves as a leading IP and Technovation Cloud Platform. Through engaging and integrating resources and services online and offline, at home and abroad, we have initiated a new model of IP operations via utilizing AI, big data and IoT.

Talent Spot Group Private LTD.

1.1C8-03

Address: 新加坡 Singapore Singapore-Singarepore -6 Raffles Quay #16-01
Tel: （86-21）61873000* / （86-21）61873061
Email: lynnfeng@talent-spot.com.cn
Web:

Talent Spot, the winner of Best HR Service Provider Greater China 2018-2019, is a leading Asia Pacific one-stop HR solutions provider to help overseas companies quickly launch and expand their business in China. We have 8 branch offices in Asia Pacific Region and 40+ branch offices across China. We provide staffing and recruitment services, company registration, and payroll services.

先丰服务集团有限公司 / Frontier Services Group Limited

1.1C8-04

Address: 香港地区 金钟夏悫道16号远东金融中心39层3902室 Hong Kong Suite 3902, 39/F, Far East Finance Center 16 Harcourt Road, Admiralty
Tel: +8610 61840235
Email: jackie.hu@fsgroup.com
Web: www.fsgroup.com

先丰服务集团是香港联交所上市公司（股票代码0500HK），集团总部位于香港，业务总部位于北京。在上海、迪拜、内罗毕、马耳他和约翰内斯堡等地设有分支机构。先丰是一家为在前沿市场运营的企业提供安全、物流、保险及工程于一体的服务商。
Frontier Services Group is listed on the Hong Kong Stock Exchange (0500HK) with its headquarters in Hong Kong and Beijing and offices in Shanghai, Dubai, Nairobi, Boten, Malta and Johannesburg. FSG is a leading provider of integrated security, logistics, insurance and infrastructure services for clients operating in frontier markets.

儀卓有限公司 / EXCEL RANK COMPANY LIMITED

1.1C8-06

Address: 荷兰 香港-香港-SUITES 607-9 6/F NORTH TOWER WORLD FINANCE CENTRE HARBOUR CITY 19 CANTOON ROAD KL Netherlands Hong Kong-Hong Kong-SUITES 607-9 6/F NORTH TOWER WORLD FINANCE CENTRE HARBOUR CITY 19 CANTOON ROAD KL
Tel: 021-64334325
Email: zln@shasft.com
Web:

仪卓有限公司成立于1995年，是一家专业从事国际贸易的服务企业。公司主营业务涉及：为海内外客商提供贸易一体化解决方案，实现转口贸易；为客户提供保险、金融、仓储、物流、境内外展会等一站式供应链服务；国际贸易业务咨询及商务谈判服务；重大工程境外招投标服务等。

Excel Rank International Company Limited was founded in 1995,which was a service enterprise specializing in international trade. The company's main business involves: providing trade integration solutions for customers at home and abroad, realizing transit trade, providing customers with insurance, finance, warehousing, logistics, exhibition at home and abroad and other one-stop supply chain servi.

Oz Fresh

1.1C8-07

Address: 澳大利亚 Australia VIC-Epping-G1,55 Produce Dr
Tel: +6139489539
Email: travis@ozfresh.com
Web:

公司位于澳大利亚墨尔本，常年和澳洲各大城市水果蔬菜批发商紧密合作，有自身线上线下销售渠道。通过利用公司在澳洲本地优势，从而帮助国内众多农产品出口商和有意向拓展国外市场的合作方直接对接澳洲本地零售批发销售渠道。
总公司位于澳大利亚墨尔本，常年与澳洲各大水果产地农场和澳洲当地水果蔬菜批发市场紧密合作，在各大城市有自身批发零售渠道。
凭借和澳大利亚当地各大水果产区农场和包装厂的长期合作关系，OZ Fresh同时也协助中国国内水果进口商寻找合适农产品采购资源，并能为客户与当地农场包装厂等建立和维持长期合作关系，以上服务均可提供进出口清关仓储等一条龙服务。

Max Seair Logistics Inc.

1.1C8-08

Address: 台湾地区 Taiwan China TAIPEI-7F., No.66, Songjiang Rd., Zhongshan Dist., Taipei , Taiwan
Tel: +886-2-25318677
Email: peter.zhang@mfctpe.com.tw
Web: www.mfctpe.com.tw

大躍海空物流股份有限公司，是一家國際物流服務供應商，成立於1988年。共有6間自有分公司以及100多家國外代理，分布於全球主要港口/機場，擁有完善的國際物流網路，在國際物流行業內擁有優良的商譽。主要業務：國際進出口海空運；中歐班列亞歐鐵路運輸；工程物流；海事工程/離岸風電物流；倉儲物流；散雜船貨物運輸及船舶代理/船舶租賃；集裝箱買賣/集裝箱改裝等物流運輸服務。

Max Seair Logistics Inc., was found in 1988 at Taiwan. We have more than 30 years experience specialized in import logistics and decades to logistics supply chain to make global trade easier for everyone.Our scope of business includes general air and ocean shipment,Engineering and Offshore Project logistics. We provide more transparent and efficient, global logistics services for our customer.

塔吉克斯坦丝绸之路青年旅行社

1.1C8-10

Address: 塔吉克斯坦 Tajikistan 杜尚别-杜尚别-塔吉克斯坦普罗迪大街28号
Tel: +992 937765568
Email: 115164032@qq.com
Web:

公司于2014年注册成立；主要服务：1、华人团队、个人、商务到访的地接服务；2、丝绸之路中亚段以及帕米尔高原的旅游地接服务；3、旅游产品的开发等。先后承接国家地理、敦煌研究院、自驾地理等文化交流活动，以及陕西省、甘肃省、河南省等的公务地接服务，是塔吉克斯坦目前最专业的华人地接服务团队。

Emerald Expositions

1.1C8-11

Address: 美国 United States of America California-San Juan Capistrano-31910 Del Obispo St
Tel: 010-83512635
Email: Jjh@northexpo.com.cn
Web: www.emeraldexpo.com

Emerald is a leading operator of business-to-business trade shows in the United States. We currently operate more than 55 trade shows, as well as numerous other face-to-face events. In 2018, Emerald's events connected over 500,000 global attendees and exhibitors and occupied more than 7.0 million NSF of exhibition space.

七海船务国际有限公司 / 7Seas Group Limited

1.1C8-12

Address: 约旦 Jordan Um uthaina-AlNajaf Street, building No.52
Tel: 020-81194476
Email: admin@7seaschina.com
Web: www.7seas-group.com

Brand Liaison India Pvt Ltd

1.1C8-13

Address: 印度 India Delhi-Delhi-110, Sharma Complex, A-2, Guru Nanak Pura, Laxmi Nagar
Tel: +91-11-42686678
Email: rk@bl-india.com
Web: www.bl-india.com

Brand Liaison is a well established and leading business organization providing Business services for foreign manufacturer/brand to sell their products in Indian market. Brand Liaison assists for following valuable services like - IPR-Trade Mark/Copyright, Compliance & Approvals and Brand Representation for statutory & other requirements.

Grand View Technology Pty Ltd

1.1C8-14

Address: 澳大利亚 Australia NSW-Sydney -Suite 2304, Level 23 , 66 Goulburn Street
Tel: 13826476852
Email: mikoxu@gvt861.com
Web: www.gvt861.com

Grand View Technology Pty Ltd (GVT) is headquartered in Sydney, Australia, with branches in Shanghai and Shenzhen . GVT focuses on developing supply chain software and hardware for cross-border trades, providing cross-border cloud supply-chain system solutions for domestic/foreign brands, distributors, third-party platforms, franchised stores, consumers and other cross-border trade stake.

* The deadline for information submission is 24:00, September 20. All information shall be provided and filled in by the exhibitors and the operating agencies. The Organizers bear no liability for any errors or mistakes in the information.
* 信息截止到北京时间9月20日24:00，所有信息均为参展商及组展机构自行提供及填报。若有错误，承办单位概不负责。

服务贸易展区
TRADE IN SERVICES
1.1 馆 Hall

汽车展区
AUTOMOBILE

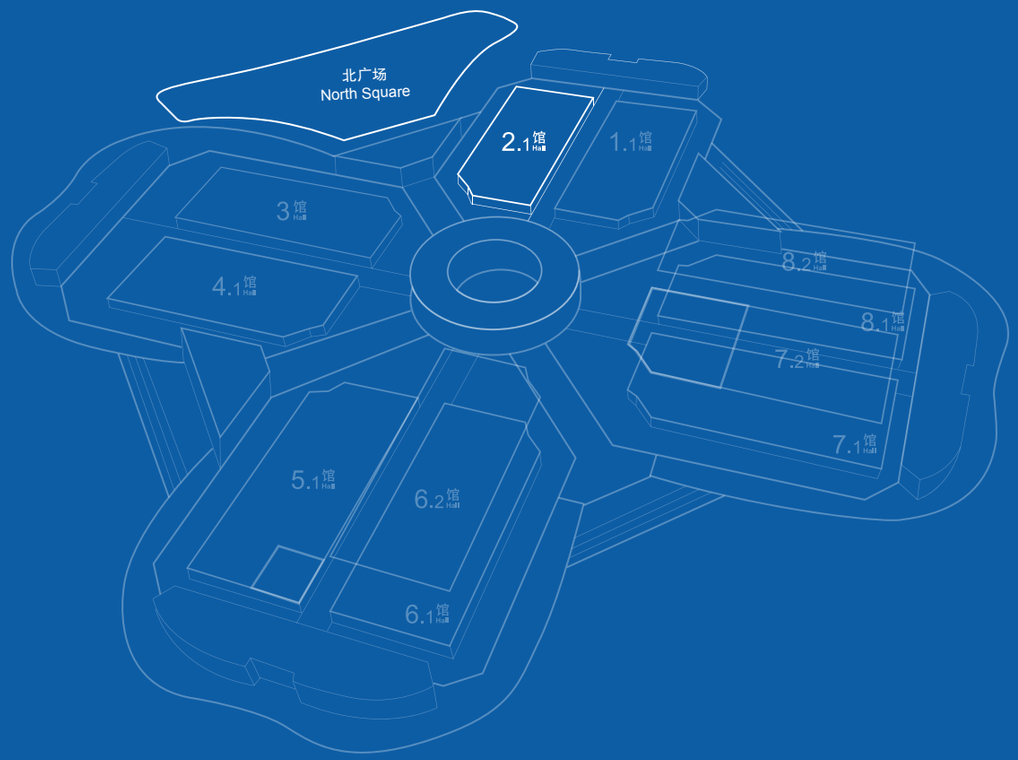

2.1馆 Hall / 北广场 North Square

伟巴斯特 / Webasto SE

2.1A1-001

Address: 德国 munich-82131 Stockdorf-Kraillinger Str. 5 Germany MUNICH-Stockdorf-Kraillinger Str. 5
Tel: 02133577242
Email: william.xu@webasto.com
Web: www.webasto.cn

伟巴斯特集团是几乎所有整车厂的创新系统全球合作伙伴，是世界百强汽车零配件供应商之一。伟巴斯特的核心业务包括研发生产适用于各种车型的车顶系统、加热系统以及新能源车动力电池系统和充电解决方案。此外，伟巴斯特为汽车后市场提供针对加热制冷系统和电动化出行的定制化加装解决方案和服务。2018年，集团销售额达34亿欧元，在全球拥有50多家分支机构。公司总部位于德国慕尼黑，创建于1901年。

The Webasto Group is a global innovative systems partner to almost all automobile manufacturers and among the top 100 suppliers in this industry sector.

Genesis

2.1A1-005

Address: 韩国 ROK(Republic of Korea) Seoul-12 Heolleung-ro, Seocho-gu
Tel: +86-21-6077-2840
Email: bongkang@genesis.com
Web: www.genesis.com

Genesis is a design -focused luxury brand that embodies the philosophy of Athletic Elegance.

博世 / Bosch

2.1A3-001

Address: 德国 Germany Postfach-Stuttgart-Postfach 30 02 20 70442 Stuttgart
Tel: 021-22182871
Email: 279433245@qq.com kai.yang3@cn.bosch.com
Web: www.bosch.com

博世集团于1909年在中国开设了第一家贸易办事处，1926年在上海创建了首家汽车售后服务车间。时至今日，博世集团的四大业务板块均已落户中国。博世在中国生产和销售汽车零配件和售后市场产品、工业传动和控制技术、包装技术、电动工具、博世家电、博世服务解决方案、安防和通讯系统以及热力技术。

Kia Motors Corporation

2.1A1-002

Address: 韩国 ROK(Republic of Korea) Seoul-12, Heolleung-ro, Seocho-gu
Tel: （010）8453-9777-1729
Email: meankyeng@hmgc.com.cn
Web: www.kia.com

起亚即起亚汽车集团，是韩国最早的汽车制造商。2000年与现代集团合并成立现代起亚汽车集团。现代起亚汽车集团是世界产量第五大的汽车生产商。成立于1944年。起亚的车系基本上已经覆盖了从轿车到SUV、MPV的各种车型，其中很多车型多次获得各项殊荣。

Kia Motors (www.kia.com) is a maker of world-class quality vehicles for the young-at-heart. The company's brand slogan – "The Power to Surprise" – represents Kia's global commitment to surprise the world with exciting, inspiring experiences that go beyond expectations.

太平洋资源氢能集团 / pacific wellfare resource hydrogen

2.1A2-001

Address: 加拿大 Canada bc -burnaby-8218 north fraser way
Tel: 0016043328819
Email: pacificwellfare999@gmail.com
Web: www.pacificland.ca

从事氢能制造、氢能储存转换（电氢电）、加氢站和氢燃料电池发动机设计生产，积累了丰富的经验。是全世界加氢站的引领者，是最先进35 和70兆帕设计生产者。移动式／固定式加氢站全球领先。氢燃料电池发动机功率从30千瓦到兆瓦级，涵盖公交车，重型卡车，乘用车，运河船只，海洋集装箱船只，拖船的氢能运用。氢能生活小区的建设和改造

Good experience in hydrogen energy manufacturing, hydrogen energy storage conversion , hydrogen refueling station and hydrogen fuel cell engine design and production. It is the world leader in hydrogen refueling stations and is the most advanced 35 and 70 MPa design producer. The mobile/fixed hydrogen station is the world leader. Hydrogen fuel cell engine power can be designed and manufactured from 30KW to megawatt, and used wildly in large transit bus, heavy duty truck, SUV and all different types of vehicles. Our engines can also be used on canal vessels, tug boats, and oversea container ships. The use of the hydrogen energy can also be used on providing power to buildings, develop hydrogen powered community.

IVECO

2.1A3-003

Address: 意大利 Italy Turin-Via Puglia 35, 10156
Tel: 021-20822019
Email: lily.liu@cnhind.com
Web: www.iveco.com.cn

依维柯是全球商用车产品系列最丰富的品牌之一，也是全球商用车行业的领导者。依维柯拥有轻、中、重全系、全用途商用车，产品覆盖公路货运、高端客运、工程改装、市政消防、防务指挥等领域。

Since 1975, Iveco is one of the world leaders in commercial vehicle industry. It designs, manufactures and sells a wide range of light, medium and heavy commercial vehicles for road and off-road use. IVECO products are widely used for applications such as transportation, high-end passenger transport, utilities, municipal, firefighting, telecommunication and other areas.

现代汽车公司 / HYUNDAI MOTOR COMPANY

2.1A1-003

Address: 韩国 ROK(Republic of Korea) Seoul-231, Yangjae-dong, Seocho-gu
Tel: (010)8453-9777-1711 / (010)8453-8977-1711
Email: lizhenshun@hmgc.com.cn
Web: www.hyundai.com/kr/ko

Established in 1967, Hyundai Motor Company is committed to becoming a lifetime partner in automobiles and beyond, offering a range of world-class vehicles and mobility services in over 200 countries. Employing more than 120,000 staff worldwide, Hyundai has sold about 4.6 million vehicles globally in 2018.

Bosch Rexroth

2.1A3-001

Address: 德国 Germany Deutschland-97816 Lohr am Main-Maria-Theresien-Str. 23
Tel: +86(21)2218-2871
Email: Kai.YANG3@cn.bosch.com
Web: www.boschrexroth.com

作为全球领先的传动与控制技术供应商之一，博世力士乐致力于为各类机械和系统设备提供高效、强大、安全的智能运动解决方案。公司在行走机械应用、机械应用与工程及工厂自动化等领域拥有丰富的项目经验，并且凭借其智能元件、定制化解决方案及服务，为实现互联工业创造完美的应用环境。同时，博世力士乐还为客户提供各种液压、电子传动与控制.齿轮.线性传动及组装技术.软件及物联网的接口。

We are your strong partner in mobile hydraulics. Using electrified, electronic and digitally networked solutions, we are helping you to create the next generation of mobile machines – harvesting machines that perform precision farming, powerful construction machines that automatically excavate or level, and handling equipment with emission-free electric drives.

玛莎拉蒂 / Maserati S.P.A

2.1A3-005

Address: 意大利 摩德纳 Italy Modena
Tel: 60107186
Email: samantha.zhang@maserati.com.cn
Web: www.maserati.com/cn/zh

玛莎拉蒂于1914年成立于意大利的博洛尼亚，现总部位于摩德纳。品牌旗下车型包括Quattroporte总裁轿车、Ghibli轿车、SUV Levante，均以设计、性能、舒适、优雅和安全的完美结合重新定义了意大利汽车的基因。
Quattroporte总裁轿车作为高性能豪华轿车，以其对优雅与动感的完美融合成为意式至臻设计的旗舰之作。Levante作为豪华SUV车型，以其经典独特的设计风格和激情澎湃的驾驶体验赢得了众多消费者的青睐。Ghibili作为豪华轿跑集动感操控与舒适驾乘于一体，成为四门豪华轿跑的极致代表。
Headquartered in Modena, Italy, Maserati is a super-luxury auto brand that was founded in 1914 in Bologna. The brand's current line-up comprises the flagship Quattroporte, the Ghibli executive sports sedan, the Levante SUV, and each of them redefining what makes an Italian sports car in terms of design, performance, comfort, elegance and safety.

Audi AG

2.1A6-001(03)

Address: 德国 Germany Ingostadt
Tel: +86 10 6531 0000 / +86 10 6531 3000
Email: PR@volkswagen.com.cn
Web:

奥迪集团凭借奥迪、杜卡迪以及兰博基尼品牌，成为最成功的高档豪华汽车和摩托车制造商之一。奥迪集团的分支机构遍布全球100多个市场，并在全球13个国家设有18个生产基地。奥迪汽车股份公司的全资子公司包括奥迪运动有限公司、兰博基尼汽车股份公司和杜卡迪摩托控股股份公司。
奥迪2019年上半年向客户交付了906,200辆奥迪品牌汽车。集团目前在全球的员工总数约90,000人。
The Audi Group, with its brands Audi, Ducati and Lamborghini, is one of the most successful manufacturers of automobiles and motorcycles in the premium segment. It is present in more than 100 markets worldwide and produces at 18 locations in 13 countries. 100 percent subsidiaries of AUDI AG include Audi Sport GmbH, Automobili Lamborghini S.p.A. and Ducati Motor Holding S.p.A.
In first half of 2019, Audi delivered to customers about 906,200 automobiles of the Audi brand. At present, approximately 90,000 people work for the company all over the world, more than 60,000 of them in Germany. Audi focuses on sustainable products and technologies for the future of mobility.

德国大众汽车 / Volkswagen AG

2.1A6-001(01)

Address: 德国 沃尔夫斯堡 Germany Wolfsburg
Tel: +86 10 6531 0000 / +86 10 6531 3000
Email: PR@volkswagen.com.cn
Web:

基于“众前行，致未来”品牌战略，大众汽车品牌在中国发展势头强劲，将推出包括SUV、新能源车型在内的多款极具吸引力的新车型。2019年上半年，大众汽车乘用车品牌在中国市场上取得了亮眼的成绩：中国大陆及香港地区，超过142.98万消费者购买了大众品牌汽车。在上汽大众、一汽-大众和大众进口汽车的共同努力下，大众汽车品牌作为一个具有吸引力和值得信赖的品牌，继续成为中国消费者的购车首选。大众汽车品牌的产品销往全球超过150个市场，并在14个国家的超过50个地区进行生产。目前，大众汽车品牌在全球共有195,878名员工。同时，大众汽车品牌拥有超过1万个经销商及8.6万名经销商员工。
Strong momentum from its Move Forward brand initiative in China; many attractive new models coming, including SUVs and NEVs. The result: Volkswagen China Passenger Cars Brand outperformed the overall market in China during the first 6 months of 2019. More than 1,429,800 customers took delivery of a new Volkswagen in Mainland China and Hong Kong. The combined efforts of SAIC VOLKSWAGEN, FAW-Volkswagen and Volkswagen Import saw Volkswagen Brand remain the number one choice for Chinese car buyers, as an attractive and trusted brand. The Volkswagen Passenger Cars brand is present in more than 150 markets throughout the world and produces vehicles at over 50 locations in 14 countries. Currently, 195,878 people work for Volkswagen across the globe. The brand also has over 10,000 dealerships with 86,000 employees.

General Motors Co.

2.1A6-002

Address: 美国 United States of America Michigan-Detroit-300 Renaissance Ctr
Tel: 021-28987066
Email: rachel.1.zhu@gm.com
Web: www.gm.com

General Motors is committed to delivering safer, better and more sustainable ways for people to get around. GM, its subsidiaries and its joint venture entities sell vehicles under the Cadillac, Chevrolet, Buick, GMC, Holden, Baojun and Wuling brands.

Porsche AG

2.1A6-001(02)

Address: 德国 Germany Stuttgart
Tel: +86 10 6531 0000 / +86 10 6531 3000
Email: PR@volkswagen.com.cn
Web:

作为享誉全球70余载的顶尖跑车品牌，保时捷秉承“Intelligent Performance”之卓越理念，锐意创新，不断进取，以为全球跑车爱好者提供集卓越性能与非凡效率于一身的完美跑车为己任，不断拓展跑车设计与制造的新境界。自2001年进驻中国市场以来，保时捷中国便致力于为每一位渴望挑战、追求完美的中国车友带来品牌所倡导的运动体验与创新精神，来自保时捷全系顶级跑车的无限魅力亦得以倾力呈现。截至目前，保时捷在中国共拥有120家销售网点，确保每一位中国车主均能体验到保时捷享誉全球的至臻个性化服务。2019年上半年，保时捷在华共交付42,608台新车，中国卫冕保时捷全球最大单一市场。
As one of the most prestigious automobile brands in the world for decades, Porsche leads the way in providing a new generation of sports cars that prove performance and efficiency can be perfectly combined. Since entering the Chinese market in 2001, Porsche China has been dedicated to bringing the sporty genes and innovative spirit of the marque to Porsche enthusiasts in this dynamic market. In Porsche's network in China, customers can experience the unlimited appeal of Porsche's iconic sports cars. There are now 120 sales sites in operation across China, ensuring that Porsche customers across the country receive the hallmark personalised care that sets Porsche apart around the world. In the first half of 2019, with a total 42,608 delivery, China remained the largest single market for Porsche worldwide.
In the first half of 2019, with a total 42,608 vehicles delivered, China remained the largest single market for Porsche worldwide.

戴姆勒股份公司 / Daimler AG

2.1B1-001

Address: 德国 Germany Stuttgart-Mercedesstraße 137 70327
Tel: 84173449
Email: yunfeng.bai@daimler.com
Web: www.daimler.com/en

戴姆勒股份公司旗下拥有轿车、商务旅行车、大客车、载重车和金融服务等多个事业部，是全球最大的豪华轿车和商用车生产商。除了全球最具价值的汽车品牌梅赛德斯-奔驰以及梅赛德斯-AMG、梅赛德斯-迈巴赫和Mercedes me以外，戴姆勒的品牌阵容还包括smart、福莱纳、西星、巴拉特奔驰、扶桑、赛特拉、托马斯客车以及戴姆勒金融服务的若干品牌。
Daimler AG is one of the world's most successful automotive companies. With its divisions Mercedes-Benz Cars, Daimler Trucks, Mercedes-Benz Vans, Daimler Buses and Daimler Financial Services, Daimler is one of the biggest suppliers of premium cars and the world's largest producer of trucks above 6 tons. Daimler Financial Services provides financing, leasing, fleet management, investment products, brokerage of insurance and credit cards, as well as innovative mobility services.

TOYOTA MOTOR CORPORATION

2.1B1-002(01)

Address: 日本 Japan Aichi,471-8572-Toyota-1,Toyota-cho
Tel: 8610-5757666-6290
Email: jinyao@tmci.com.cn
Web:

Toyota Motor Corporation, is committing to transforming itself from an automobile manufacturer to a mobility company, and also making contributions to the realization of sustainable development society. A good vision for the future is manifested by showing the most advanced technology of electrification, intelligence and informatization this time.

TOYOTA MOTOR CORPORATION – LEXUS

2.1B1-002(02)

Address: 日本 Japan Aichi,471-8572-Toyota-1,Toyota-cho
Tel: 8610-57576666-6290
Email: jinyao@tmci.com.cn
Web:

A global luxury automotive brand with an unwavering commitment to bold, uncompromising design, exceptional craftsmanship, and exhilarating performance, Lexus has developed its lineup to meet the needs of the next generation of global luxury guests, and is currently available in over 90 countries worldwide.

沃尔沃汽车集团 / Volvo Car Corporation

2.1B3-001

Address: 瑞典 哥德堡 Sweden Gunnar Engellaus väg 8, 418 78 Göteborg
Tel: 16621032213
Email: swang99@volvocars.com
Web:

沃尔沃汽车是全球著名豪华汽车品牌，总部位于瑞典哥德堡。沃尔沃汽车秉持“安全、环保、品质”的承诺，通过对安全健康的不懈坚持和对未来出行方式的持续探索，致力于“以个性化、可持续和安全的方式为所有人提供畅行无忧的出行方案”。沃尔沃汽车的业务遍及100多个国家，并在中国、欧洲和和美国拥有生产基地，通过全球布局优势开展进出口业务，为中国以及全世界消费者带来优秀的产品和出行服务。
Volvo Cars is a world-renowned luxury car manufacturer with its headquarters in Gothenburg, Sweden. Committed to the core values of safety, environment and quality, Volvo Cars cares about people and the world we live in while continuously pushing the boundaries of future mobility. The company is dedicated to providing customers with the freedom to move in a personal, sustainable and safe way. Covering more than 100 countries and with an industrial footprint in China, Europe and the Americas, Volvo Cars is a true global organisation and its import and export operations bring premium products and mobility services to customers worldwide.

Honda Motor Co., Ltd

2.1B3-002

Address: 日本 Japan Tokyo- Tokyo-2-1-1, Minami-Aoyama, Minato-ku, Tokyo 107-8556, Japan
Tel: 010-6590-9019-405
Email: xiaofan_wang@hmai.honda.com.cn
Web:

本田技研工业株式会社成立于1948年，在全球29个国家和地区拥有130个以上的生产基地，产品包括摩托车、汽车和Life Creation等，除了排在首位的摩托车，汽车的产量和规模也都排名世界十大厂家之列。

日产汽车 / Nissan Motor Co., Ltd.

2.1B6-001

Address: 日本 Japan 1-1, Takashima 1-chome, Nishi-ku, Yokohama-shi, Kanagawa 220-8686
Tel: 58697215-838 / 58697215-838
Email: he.ruan@fangtengbj.com
Web: www.nissan-global.com/en/index.html

日产汽车是一家拥有丰富产品线的全球性汽车制造商，旗下拥有60多款日产、英菲尼迪及达特桑品牌车型。公司总部设在日本横滨，经营范围覆盖亚洲及大洋洲，非洲、中东及印度，中国，欧洲，拉丁美洲和北美洲六大地区。1999年，日产汽车与法国汽车制造商雷诺成为战略合作伙伴。2016年，日产汽车收购三菱汽车34%的股份。2018年，雷诺-日产-三菱联盟全球销量达到1,076万台。更多信息，欢迎浏览日产汽车新闻网站nissan-global.com。

特斯拉 / Tesla

2.1B6-002

Address: 美国 加利福尼亚-帕罗奥多-3500 Deer Creek Road Palo Alto, CA 94304 United States of America California-Palo Alto-3500 Deer Creek Road Palo Alto, CA 94304
Tel: 13482730719
Email: sachen@tesla.com
Web: www.tesla.cn

特斯拉是全球豪华智能电动汽车行业的领导者，于2003年在美国硅谷成立，致力于加速世界向可持续能源的转变。2010年特斯拉在美国纳斯达克成功上市，而今特斯拉已成为全球唯一的综合型可持续能源企业，提供从能源生成、存储到运输的整体服务。特斯拉高性能全智能电动汽车降低了全球交通对不可再生能源的依赖，真正实现了零排放。
Tesla, Inc., the global leader in the electric vehicle industry, was founded in Silicon Valley in 2003. Tesla is committed to accelerating the world's transition to sustainable energy. Today, Tesla also builds infinitely scalable clean energy generation and storage products. Tesla believes the faster the world stops relying on fossil fuels and moves towards a zero-emission future, the better.

BMW Group

2.1B7-001

Address: 德国 Germany Petuelring 130 80788 Munich
Tel: 021-61251806
Email: kang.geng@bmw.com
Web:

With its four brands BMW, MINI, Rolls-Royce and BMW Motorrad, the BMW Group is the world's leading premium manufacturer of automobiles and motorcycles and provider of premium financial and mobility services.
The BMW Group officially came to the Chinese mainland in April 1994 by opening the BMW Beijing Representative Office in Beijing.

Ford Motor Company

2.1B7-002

Address: 美国 MI-Dearborn-Customer Relationship Center United States of America MI-Dearborn-16800 Executive Plaza Drive
Tel: 021-20322065
Email: xqian4@ford.com
Web:

Ford Motor Company is a global company based in Dearborn, Michigan. The company designs, manufactures, markets and services a full line of Ford cars, trucks, SUVs, electrified vehicles and Lincoln luxury vehicles, provides financial services through Ford Motor Credit Company and is pursuing leadership positions in electrification, autonomous vehicles and mobility solutions.

NEURON CORPORATION

2.1B7-003

Address: 美国 United States of America California-COSTA MESA-555 ANTON BLVD STE 220
Tel: 86-21-62525652
Email: taoxinyu@sckic.com
Web:

牛仁 EV是一家成立于2017年的加州电动汽车公司。由联合创始人爱德华.李领导，牛仁旨在通过创新型环保的运输技术丰富人们的生活。牛仁公司的设计理念是简洁实用，即性能包容于大众的简易使用体验。牛仁将其秉承的功能意义诠释成一个即减少能源浪费又优化多样功能的全新可升级系统。
Neuron EV is a California electric vehicle company founded in 2017. Led by co-founder Edward lee, Neuron aims to enrich people's lives through innovative and environmentally friendly transportation technologies. Neuron design philosophy can be perceived as “simple and practical”, that is, easy to use for the public experiences. Neuron interprets its functional meaning as a new upgradable system which reduces energy waste and optimizes multiple functions as well.

星克跃尔株式会社 / Thinkware Corporation

2.1C0-001

Address: 韩国 京畿道-城南市-盆唐区板桥街道240号Sanwhan Hipex A栋9层 ROK(Republic of Korea) Gyeonggi-do-Seongnam-si-9FL., Samwhan Hipex A, 240, Pangyoyeok-ro
Tel: 86 18688928767
Email: sihong84@thinkware.co.kr
Web:

星克跃尔株式会社成立于1997年，从事于汽车导航、行车记录仪等车载式电子产品生产。在韩国连续15年获得品牌知名度第一，导航和行车记录仪市场占有率为60%，45%。2016年进军到中国，开展新的里程。
Headquartered in Korea, THINKWARE is a leading provider of location-based services and innovative smart car information technologies since 1997. We are committed to providing reliable, award-winning products through our innovative technologies while assuring quality post-purchase support with a strong customer-oriented mindset.

东洋钢钣株式会社 / Toyo Kohan Co.,Ltd

2.1C0-002

Address: 日本 东京都-品川区-东五反田 2-18-1 大崎Forest大厦 Japan Tokyo-Shinagawa-ku-Osaki Forest Bldg., 2-18-1, Higashi-Gotanda,
Tel: 021-62591708
Email: zhangyanlei@toyokohan.co.jp
Web: www.toyokohan.cn

“在钢铁材料的加工方面得心应手的东洋钢钣”具备了电镀、层压、超薄冷轧的技术，为您的日常生活增添光彩。为了满足客户“如果有所需的材料的话该多好…”的需求，准备了表面处理钢板、功能性材料、化工合成品以及各种新材料的产品系列。在此，您一定可以找到所需的材料。
The technologies of electroplating, laminating, and ultra-thin rolling add color to our daily lives. To materialize customer's wishes of “would be good to have”, we have lined up a variety of new materials such as materials related to surface treated steel plated, functional materials, cosmetics, etc.

日本株式会社朝日橡胶 / ASAHI RUBBER INC.

2.1C0-003

Address: 日本 JAPAN-大宫区土手町2-7-2-埼玉県さいたま市 Japan SAITAMA-2-7-2,DOTECHO,OMIYA-KU,SAITAMA-SHI
Tel: 021-62126466
Email: l-ma@asahi-rubber.com.cn
Web: asahi-rubber.co.jp

株式会社朝日橡胶，成立于1970年，致力于工业及医疗用橡胶制品的生产，其中车载的主要品牌产品是ASA COLOR LED(车载内饰氛围照明),硅胶透镜，及车载精密按键橡胶等产品。朝日橡胶以优秀的独特的对光和色的调色技术，制造出世界一流的产品并积极服务于世界的汽车市场。
在中国，有独资子公司【朝日科技（上海）有限公司】和独资工厂【东莞朝日精密橡胶制品有限公司】
We, the Japanese industrial rubber manufacturer Asahi Rubber Inc., founded in 1970, and handles sales for the North America and EU regions.Our company is both ISO9001 and ISO14001 certified. We specialize in supplying customizable silicone based optical products including LEDs, lenses, and solder masks. We offer solutions to reduce material/development costs, cut weight, and increase efficiency of your product while adapting to your design. We also provide a hassle free customization process backed with quality engineering and precise Japanese manufacturing.

HORIBA, Ltd.

2.1C0-006

Address: 日本 Japan Kyoto-Minami-ku-2 Miyanohigashi-cho, Kisshoin
Tel: 81 753255000 ext.505
Email: toshitaka.uemura@horiba.com
Web: www.horiba.co www.horiba.com

堀场集团向遍布全球各地的用户大量提供具有世界先进水平的分析仪器系统及系列产品。应用范围从汽车发动机尾气排放检测的研发到过程及环境监测，体外医疗检测，半导体制造和计量，以及范围广泛的科技研发和质量控制测量。
The HORIBA Group of worldwide companies provides an extensive array of instruments and systems for applications ranging from automotive R&D, process and environmental monitoring, in-vitro medical diagnostics, semiconductor manufacturing and metrology, to a broad range of scientific R&D and QC measurements. Proven quality and trustworthy performance have established widespread confidence in company.

IEE S.A.

2.1C0-005

Address: 卢森堡 Luxembourg bissen-1,rue de campus
Tel: (+352) 24 54 2882
Email: sce@iee.lu
Web: www.iee.lu

For more than 25 years, we've been developing and manufacturing cutting-edge sensing solutions. We're an experienced automotive system supplier and component manufacturer, working closely with leading car makers around the world. In fact, we've equipped more than 280 million vehicles worldwide with solutions to either detect occupants or classify them.

株式会社电装 / DENSO CORPORATION

2.1C1-001

Address: 日本 爱知县-刈谷市-日本 Japan AICHI-KARIYA-Showa, 1-1
Tel: 021-23500000 / +81-566-61-5821
Email: jun_yan@dich.denso.com.cn hajime.tamura.j4c@jp.denso.com
Web: www.denso.com/cn/zh

电装是世界知名的汽车系统及零部件供应商之一。在2018年世界500强企业中排名第229名,中国企业社会责任排行榜14名。电装在全球30多个国家和地区设有约220家关联公司，集团员工数超过17万人。

Auria Solutions Ltd.

2.1C1-002

Address: 英 国 United Kingdom Birmingham-Coleshill-Highway Point Gorsey Lane
Tel: 021-62323506
Email: tangweixiong@sh-shenda.com
Web: www.auriasolutions.com

Auria is a leading global supplier of automotive acoustical, thermal, aerodynamic and fiber-based products. Formed in 2017, Auria is built on a century of automotive/transportation industry heritage. Auria’s Finance HQ is in Coleshill and Operation HQ locations are in Southfield, Shanghai and Düsseldorf. Auria has 27 plants and 10 technical centers in 11 countries and nearly 7,000 people globally.

Docarto GmbH

2.1C1-003

Address: 德国 Germany Amtsgericht Hagen StNr. 321/5774/3212
Tel: 025-52703393
Email: w.f@bosenlube.com
Web: www.bosenlube.com

目前德国伯森润滑油已经拥有超过150多个品种的完整产品线，从乘用车机油、变速箱油、齿轮油到商用车机油及齿轮油、二冲程和拖拉机用机油、工业用油、液压油、压缩机用油到工业齿轮油。德国伯森润滑油拥有所有主流OEM厂商主机厂的授权许可。
At present, BOSEN Lubricant has more than 150 kinds product lines, ranging from passenger car oil, transmission oil, gear oil to commercial vehicle oil and gear oil, two stroke and tractor oil, industrial oil, hydraulic oil, compressor oil to industrial gear oil. Bersen Lubricants in Germany has licenses from all major OEM manufacturers.

The Arabian Petroleum Supply Company / 阿拉伯石油供应公司

2.1C1-005

Address: 沙特阿拉伯 Saudi Arabia Jeddah-Industrial Area Phase No.5
Tel: 0722-3812399
Email: liuqiang@apsco.com.cn
Web: www.apsco.com.cn

APSCO是全球领先的航空燃料供应商和润滑油和润滑脂制造商之一，也是沙特阿拉伯实现2030年愿景增长和多样化的主要推动者。我们相信，我们的成功取决于保持良好的声誉，这是我们对提供高质量服务和产品的坚定承诺以及我们为保持客户满意度所做的不懈努力的结果。
APSCO is one of the world’s leading Aviation fuel suppliers and manufacturers of lubricants and grease. We operate across the majority of the value chain, through a network of fully integrated businesses, with interests ranging from blending, aviation, storage, manufacturing, retail and distribution.

GTLA INTERNATIONAL PTE LTD

2.1C1-007

Address: 新加坡 Singapore 627564-singapore-10 Buroh St #06-12 west connect building
Tel: +65 64580163
Email: yc.low@gt-lubes.com
Web: www.gt-lubes.com

GT-LUBES is a registered trademark of GTLA International Pte Ltd in Singapore and other countries globally and our products are also being accredited by global independent bodies such as American Petroleum Institute (API) EOLCS and the European Engine Lubricants Quality Management System (EELQMS). And to further assured consumers of the authenticity of our product, a global barcode tracking number

OOO LLK-International

2.1C2-005

Address: 俄罗斯 Moscow-6 Malaya Yakimanka str., 119180 Russia Moscow-6 Malaya Yakimanka str., 119180
Tel: 021-60853500
Email: Sales-CN@lukoil.com
Web: www.lukoil.com

LUKOIL is one of the largest publicly traded, vertically integrated oil and gas companies in the world accounting for more than 2% of the world's oil production and around 1% of the proved hydrocarbon reserves. Each day we improve the quality of life for millions of consumers in over 100 countries around the globe through the supply of our products, power, and heat.

向得行興業股份有限公司 / HANS TOOL INDUSTRIAL CO., LTD

2.1C3-006

Address: 台湾地区 Taiwan Region-Taichung-No.101, Sec.2, Ho-Nan Rd., Taichung 407, Taiwan Region Taiwan Region-Taichung-No.101, Sec.2, Ho-Nan Rd., Taichung 407, Taiwan Region
Tel: +886423118682
Email: hanstool@ms23.hinet.net
Web: www.hanstool.com

漢士得工具是台灣向得行興業股份有限公司製造的專業級及工業級手工具品牌。漢士得工具有9000多種手工具品項產品，各式各樣尺寸齊全，符合德規DIN ISO製造及美國ANSI標準且終生保固。漢士得工具提供五金商店，航空/ 汽車/ 卡車/ 起重機/ 挖土機/船舶修理事業；汽油化學/油田/ 瓦斯汽油事業，防禦工事，水/電信網絡/有線電視/電氣供應線路工作，公共基礎設施，採礦，重工業。
Hans Tools is world class famous brand for professional & Industrial of hand & air tools including Sockets, torque wrenches & spanners, screwdrivers, bits, hex key, pliers, saw, cutters, Hammer, tool set, case, wagon etc. Hans is not only full range, complete size of tools, but also offers life time guarantee.

Aisin Group

2.1C2-001

Address: 日本 Japan Aichi-Kariya-2-1, Asahi-machi
Tel: +81-566-24-8223
Email: m-isogai@cld.aisin.co.jp
Web: www.aisin.com

作为日本的汽车零部件制造商,爱信集团为变速箱，引擎相关产品，制动器和车底盘，车身零部件，信息电子等构成汽车的全系领域提供产品。客户不仅仅局限于日本，与中国，欧美为首的全世界范围内的公司同时进行贸易往来。
The AISIN Group is a Japanese auto parts manufacturer that provides almost all fields that make up vehicles such as transmissions, engine-related products, brakes and chassis, body parts, and information electronics. Our business partners are not only in Japan but also with companies all over the world, including China, Europe and America.

ADNOC DISTRIBUTION

2.1C2-006

Address: 阿联酋 United Arab Emirates Sh Zayed Street next to National Drilling Company and UNB builing,Abu Dhabi,United Arab Emirates
Tel: 0086 15801933949
Email: owen.xiong@adnocoil.cn
Web: www.trip.com

埃德诺克是阿联酋的国有石油公司成立于1971年，是世界上最大的石油公司之一。
埃德诺克润滑油广泛适用于工业、汽车和船舶等领域，拥有当今世界最先进的润滑油调配厂，最新的自动化罐装和包装生产线，并配备了世界顶级的实验室设备和研发架构，确保以全球最高的质量控制和标准来服务我们的客户。
Founded in 1971, ADNOC (Abu Dhabi National Oil Company), the state-owned oil company of United Arab Emirates, is one of the world's leading energy companies.
ADNOC lubricants are widely used by automobiles, marine transportation and industry production. Thanks to the most advanced lubricants blending plants, the cutting-edge automatic packaging lines and the world-class laboratory and research framework, ADNOC could always operate under the finest quality control and serve our customers with highest standards.

德国力魔有限公司

2.1C2-003

Address: 德国 德国巴登-符腾堡州-乌尔姆 Germany Jerg-Wieland-Str.4
Tel: 025-52346716
Email: gaosh@du-hope.com
Web: www.liqui-moly.net.cn

力魔是来自德国的润滑油、汽车养护及汽车美容产品研发生产商，其旗下的4000余款产品能够全面覆盖车辆各个部位，并延伸到了航空、海洋、工业等领域。
在《Auto motor sport》、《Auto Zeitung》、《AUTO BILD》、《Motor Klassik》等德国权威汽车杂志发起的读者评比中，德国力魔已经连续九年高票超越同类竞品，被评选为润滑油品类“BEST BRAND”。凭借突出的品质，力魔产品畅销全球150多个国家并广受好评。
力魔产品不仅仅能够满足所有家用、商用车辆全方位的保养需求，作为TCR、MotoGP等世界级赛车和摩托车锦标赛的官方润滑油供应商，力魔有力地证明了其产品在严苛的工作条件下同样能够发挥出色性能。而通过赞助F1、NBA等大型赛事，力魔将逐渐走进更多用户的视野。
100%德国制造，原罐原装的优质产品，我们期待更多用户与我们共享。

德国康巴斯（COBUS INDUSTRIES GMBH）工业公司 / COBUS Industries GmbH

2.1C3-005

Address: 德国 Germany Max-Planck-Ring 43,65205 Wiesbaden
Tel: 00861088515238
Email: cobus3000@163.com
Web:

德国康巴斯（COBUS INDUSTRIES GMBH）工业公司是德国戴姆勒-奔驰旗下的一家专业化机场设备生产公司.它成立于上个世纪70年代,公司总部位于德国法兰克福旁的威斯巴登市.生产工厂分布于德国斯图加特,法兰克福,瑞士,西班牙巴塞罗那和葡萄牙波图.康巴斯公司是世界上唯一使用完整汽车生产线进行机场摆渡车生产的公司.多年的生产经历使它逐步具有完善的摆渡车生产管理,质量检验,售后服务及全球销售体系。
COBUS INDUSTRIES GMBH is a specialized airport equipment manufacturer owned by daimler-benz. It's founded in the 1970s, the headquartered is located in wiesbaden.
It is the only company in the world USES a complete automobile production line. Years of production experience enabled it to have perfect production management and sales system.

捷豹路虎投资有限公司 / Jaguar Land Rover Investment Co., Ltd.

2.1C5-001

Address: 英国 United Kingdom W/1/22 Abbey Road, Whitley, Coventry CV3 4LF
Tel: 021 61562800
Email: kevin.xie@imss.jaguarlandrover.cn
Web: www.jaguarlandrovercareer.cn

捷豹路虎（英文简称JLR）是一家拥有两个顶级奢华品牌的英国汽车制造商，属于印度塔塔汽车旗下。研发、生产、销售捷豹品牌和路虎品牌的全部汽车。
公司主要业务是开发、生产和销售捷豹和路虎汽车。其中拥有辉煌历史的捷豹是世界上生产豪华运动轿车和跑车的主要制造商，而路虎则是全球生产顶级奢华的全地形4X4汽车制造商。
Jaguar Land Rover (JLR) is a British car manufacturer with two top luxury brands and is owned by India's Tata Motors. Develop, produce and sell all Jaguar brands and Land Rover brands. The company's main business is the development, production and sale of Jaguar and Land Rover. Among them, Jaguar is a major manufacturer of luxury sports cars and sports cars in the world, while Land Rover is the world's leading manufacturer of luxury all-terrain 4X4 vehicles.

Fiat Chrysler Automobiles (FCA)

2.1C5-002(01)

Address: 美国 United States-United States-FCA US LLC 1000 Chrysler Dr Auburn Hills, MI 48326 United States of America FCA US LLC 1000 Chrysler Dr Auburn Hills, MI 48326
Tel: 021-24189888
Email: hotline@jeepsupport.com.cn
Web: www.jeep.com.cn

Headquartered in London, Fiat Chrysler Automobiles (FCA) was formed in January 2014 through the merger of Fiat (founded in Italy in 1899) and Chrysler (founded in the U.S. in 1925). Now in its eighth decade of legendary heritage, the Jeep brand continues to deliver an open invitation to live life to the fullest.

阿尔法罗密欧汽车销售有限公司 / Alfa Romeo Automobiles Sales Co., Ltd

2.1C5-002(02)

Address: 意大利 Italy Piedmont-Turin-Fiat S.p.A. Corso Marconi 10
Tel: +86 21 2218 7377
Email: deanna.ding@alfaromeo.com.cn
Web: www.alfaromeo.com

意大利百年豪华运动汽车品牌阿尔法•罗密欧，传承108年的竞速基因，将以集优雅设计与卓越性能于一体的经典杰作，为中国客户带来了纯粹而澎湃的驾驶激情。
Alfa Romeo Automobiles S.p.A. is an Italian luxury car manufacturer, founded by Frenchman Alexandre Darracq as Società Anonima Italiana Darracq (SAID), a company that would produce and sell special Darracq models for Italy. The brand is known for sporty vehicles and has been involved in car racing since 1911.

Gumpert Aiways Automobile GmbH

2.1C5-003

Address: 德国 Germany Bayern-85053 Ingolstadt-Carl-Hahn-Str. 5
Tel: 0049 84188167316
Email: zhao.wu@gumpert.de
Web: www.rolandgumpert.com

Gumpert Aiways Automobile GmbH has been invested by AIWAYS Automobile Co., Ltd. in July 2017 in Ingolstadt/Bavaria in Germany. The company's business scope includes: Technology R&D, product development of new energy vehicles and parts; Technology development, technology transfer, technical consultation.

THE LINCOLN MOTOR COMPANY

2.1C6-001

Address: 美国 美国密歇根州-迪尔伯恩市 United States of America Michigan, -Dearborn-United States Michigan Dearborn city
Tel: 021-2032 2624
Email: dwang113@lincoln.com
Web: https://www.lincoln.com.cn

林肯汽车是福特汽车公司旗下的高端汽车品牌。林肯致力于成为拥有众多高端车型的全球豪华汽车品牌，并为消费者带来独特用车体验。林肯汽车目前在中国市场推出的车型包括林肯领航员Navigator、林肯航海家Nautilus、林肯MKC、林肯大陆Continental和林肯MKZ。
全新林肯飞行家的推出，进一步完善林肯SUV阵容，将成为大型七座豪华SUV细分市场中的新锐力量。这款车型体现了林肯设计的最高造诣，更是首款完美诠释“静谧之旅”品牌理念和产品定位的车型。

BUND ON THE BOULEVARD

2.1C6-002

Address: 美国 United States of America CA-Westlake Village-31250 Cedar Valley Drive
Tel: +1 805 523 3330
Email: Info@bboulevard.com
Web: www.bboulevard.com

Bund on the Boulevard; locates, acquires, imports and showcases for sale the investment class collector automobiles for the first time into China. Our unique history and background through strategically positioning within the classic car community thus enabling us to provide, cultural, education and personal enjoyment experiences. Give us a chance to drive your passion.

VELVET FUTURA s.r.o

2.1C6-003

Address: 斯洛伐克 Slovakia Nové mesto-Bratislava-mestska cast-Pod Vtá nikom 4
Tel: 22110288-5204
Email: info_expo@oih.com.cn
Web:

HYUNDAI MOBIS

2.1C7-001

Address: 韩国 ROK(Republic of Korea) 203, Teheran-ro, Gangnam-gu, Seoul, 06141 KOREA
Tel: 021-6769-6769
Email: 5401238@gmobis.com
Web: en.mobis.co.kr/main/index.do

现代摩比斯是全球零部件供应商,秉承“成为汽车和消费者的终生技术合作伙伴”的理念，其制造业务遍及10个国家的30多个地区。产品包括汽车模块（底盘、驾驶舱和前端）、制动、气囊、灯具和汽车电子产品等。
Hyundai Mobis is a global tier-1 automotive supplier. It was established in 1977, and is headquartered in Seoul, Korea. The corporate philosophy is to become a lifetime partner with technologies for automobiles and people. Manufacturing operations are in over 30 locations in 10 countries. Mobis products including Automotive modules, Brakes, Airbags, Lamps, and Automotive electronics etc.

HYUNDAI HEAVY INDUSTRIES HOLDINGS CO., LTD

2.1C7-002

Address: 韩国 ROK(Republic of Korea) Daegu-50, Techno sunhwan-ro 3-gil, Yuga-myeon, Dalseong- gun,
Tel: 021-34152519
Email: yinqiao@hhichina.com
Web: www.hyundai-robotics.com

现代重工作为韩国最大的机器人制造商，从1984年开始致力于机器人事业，并在2018年开创了韩国国内工业机器人累积生产超过5万台的新纪元。如今，现代不断加大技术投入，全力为全球提供广泛的产品、解决方案和相关服务，助力提高工业生产效率和安全性。
As the largest robot manufacturer in Korea, Hyundai Heavy Industries has been working on the robot business since 1984. In 2018, the advent of a new era comes, Hyundai robotics' cumulative production has been over 50,000 industrial robots in Korea.

The Belarusian State Concern for Oil and Chemistry

2.1C7-003(01)

Address: 白俄罗斯 Minsk-73 Dzerzhinsky Ave., 220116 Belarus Minsk-73 Dzerzhinsky Ave., 220116
Tel: +(375 17) 269-02-08
Email: zadiran@belneftekhim.by
Web: www.belneftekhim.by

Organizations of the petrochemical industry of Belarus produce: mineral fertilizers (nitrogen and NPK); over 300 types and sizes of tires in an amount of over 5 mln per year for cars, trucks and heavy haulers, buses, trolleybuses, road-building vehicles, tractors and farm machines; polyester fibers and yarns; low-density polyethylene both of base grades and compositions on its basis,other products

JSC Grodno Azot

2.1C7-003(02)

Address: 白俄罗斯 Grodno-100, Prospect Kosmonavtov Belarus Grodno-100, Prospect Kosmonavtov
Tel: +375152794584
Email: romanjuk@azot.com.by
Web: www.azot.by

JSC Grodno Azot is the largest enterprise of the chemical sector of Belarus. The company is the world-wide known producer of nitrogen fertilizers and industrical chemistry as well as polyamide.

Polotsk-Steklovolokno / JSC "Polotsk-Steklovolokno"

2.1C7-003(03)

Address: 白俄罗斯 Belarus Polotsk-Stroitelnaya Str., 30
Tel: +375214415700
Email: Sheviakov@psv.by
Web: eng.polotsk-psv.by

JSC "Polotsk-Steklovolokno" is one of the leading manufacturers of glass fiber and the products on its basis in the world. We produce products on the basis of E-glass fiber, hollow glass fiber, high temperature silica fiber (two types) and basalt fiber. The main application areas for our products are following: Construction, Automotive, Aerospace, Military, Electronic, Energetic and etc.

OJSC “SvetlogorskKhimvolokno”

2.1C7-003(04)

Address: 白俄罗斯 Belarus Gomelskaya-Svetlogorsk-Zavodskaya 5
Tel: 80234294091
Email: lukashuk@sohim.by
Web: www.sohim.by/en

OJSC «SvetlogorskKhimvolokno» in Belarus is a leading producer of Aramid (POD) materials (analogue to Nomex) ARSELON and CARBON material, fireproof fiber with operating temperature up to 300 C. We produce a range of products, including yarn, fiber, fabrics. Aramid fiber is used for producing fabrics for heat-resistant application. We ready to provide tissue samples.

OJSC "Naftan"

2.1C7-003(05)

Address: 白俄罗斯 Belarus Vitebsk-Novopolotsk-Industrial zone
Tel: +37514598374
Email: D.Shurpakova@naftan.by
Web: www.naftan.by

OJSC "Naftan" is a large petrochemical complex which produces various types of fuels, lube oils and bitumens, aromatic hydrocarbons and petrochemicals, acrylic fiber, LDPE, etc.

Sphera Optical Plant

2.1C7-003(07)

Address: 白俄罗斯 Belarus Minsk-23 Makayonok St
Tel: +375 17 267 52 91 / +375 17 267 27 71
Email: sfera@belomo.by
Web: belomo.by/en

Sphera Optical Plant has been founded in 1994 as the affiliated company of the OJSC "MMW named after S.I. Vavilov - managing company of BelOMO Holding" for optical parts production.
At present the Enterprise is the manufacturer of a great number of optical parts of various complexity as per the drawings of the Customer. Optical parts manufactured by Sphera Optical Plant are being successfully used.

Belshina JSC

2.1C7-003(08)

Address: 白俄罗斯 Mohilev-Bobruisk-213824 Minskoe Shosse Belarus Bobruisk-213824, Minskoe Shosse
Tel: +375 (225) 410 146
Email: koshanoyu@belshina.by koshanoyn@belshina.by
Web: belshina.by/bitrix/_china/index_china.html

BELSHINA JSC is one of the world's largest tire manufacturers. The company develops, markets, and sells more than 300 sizes of tires for most applications: PCR, TBR, OTR, tires for road-building and handling vehicles, tires for electric vehicles and tires for tractors and agricultural vehicles.

OJSC “Gomselmash”

2.1C7-003(09)

Address: 白俄罗斯 Belarus Gomelskaya-Gomel-Shosseinaya str., 41
Tel: +375 232 63-90-66
Email: post@gomselmash.by
Web: www.gomselmash.by

Holding "Gomselmash" is one of the largest manufacturers of agricultural machinery ranking among the world market leaders of combine harvesters and other complexes of agricultural machines.Agricultural equipment "PALESSE" is a 16 types of farm machinery, 75 basic models and model types, 70 adapters and units for harvesting different agricultural crops.

AIP GmbH & Co.,KG

2.1C8-001

Address: 德国 Germany Bavaria-haldenwang-Hoyen 30 D 87490
Tel: 021-61002071
Email: mars@aip-automotive.cn
Web: www.aip-automotive.de

AIP GmbH & Co. KG有限公司于1998年开始研究和开发底盘测功机产品，并迅速在这一领域内达到世界领先的地位。产品系列适用于各类的机动车辆以及各种研发试验室的产品。这种特殊的测试系统用于测试轿车、卡车、摩托车、三轮车、牵引车、叉车、特种车辆等，广泛应用于各汽车行业的研发设计中心和质量认证机构。
AIP develops and manufactures special testing equipment (reproducible road driving simulation) for cars, trucks, motorcycles, ATV, tractors, forklift trucks, special vehicles, etc., in the areas of research and development, type approval and quality assurance.
The AIP comprehensive system solutions are of modular design and easily adaptable to various vehicle types and customer requirements.

* The deadline for information submission is 24:00, September 20. All information shall be provided and filled in by the exhibitors and the operating agencies. The Organizers bear no liability for any errors or mistakes in the information.
* 信息截止到北京时间9月20日24:00，所有信息均为参展商及组展机构自行提供及填报。若有错误，承办单位概不负责。

汽车展区
AUTOMOBILE

2.1 馆 Hall / 北广场 North Square

装备展区
EQUIPMENT

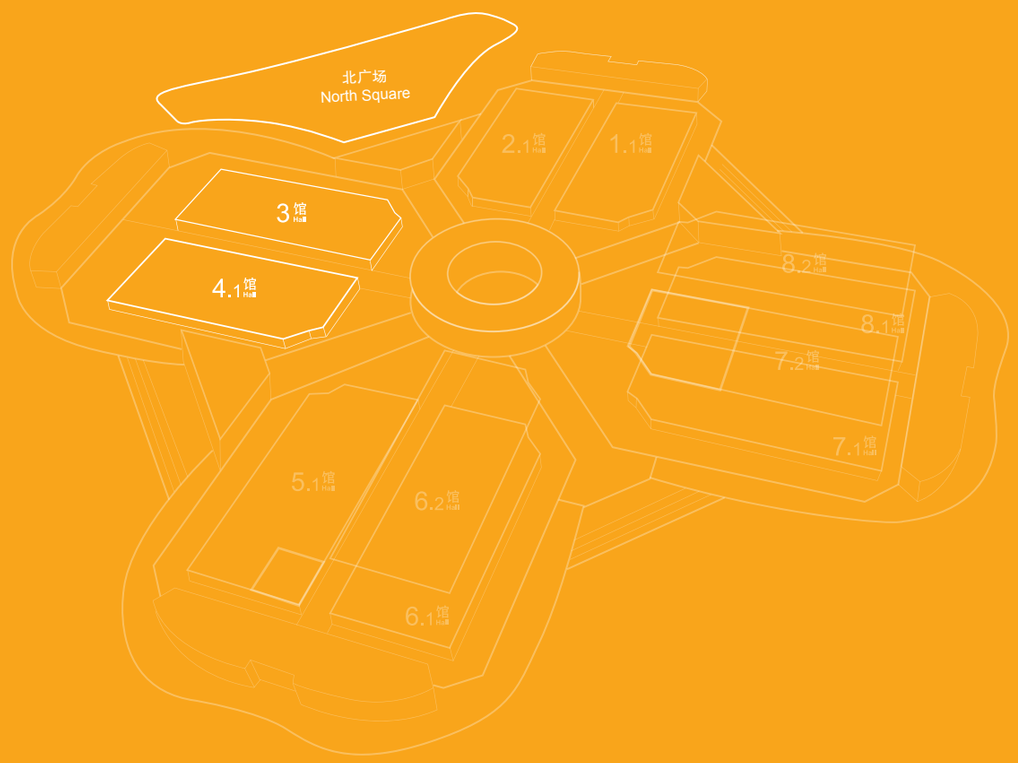

3/4.1馆 Hall / 北广场 North Square

美国阿尔泰克工业公司 / Altec Worldwide LLC

0A1-001

Address: 美国 阿拉巴马州-伯明翰市-因弗内斯中心pkwy ste 120 United States of America Alabama-Birmingham-33 Inverness center pkwy ste 120
Tel: +86-21-80328500
Email: xu.xie@altec.com
Web: www.altec.com

阿尔泰克产品被广泛应用于电力，通讯，石油，市政，建筑，公路，航空，园林等领域；美国阿尔泰克国际公司每年的产量超过20000多台，一百多个产品种类，占据北美60%的市场份额。目前产品已经遍及世界130多个国家和地区，全世界保有量接近20万辆。
Altek products are widely used in electric power, communications, oil, municipal, construction, road, aviation, garden and other fields;The annual production of artek international is more than 20,000 units, more than 100 product categories, accounting for 60% of the market share in North America.At present, the products have been sold in more than 130 countries and regions in the world, with a gl

Cargotec CHS Pte.Ltd.

0A1-002

Address: 新加坡 Singapore SINGAPORE-15 TUKANG INNOVATION DRIVE
Tel: 0755-2602 4812
+86 755 2602 4812
Email: wynne.wu@kalmarglobal.com
Web: www.kalmar.cn www.kalmarglobal.com

Kalmar offers the widest range of cargo handling solutions and services to ports, terminals, distribution centres and to heavy industry. Kalmar is the industry forerunner in terminal automation and in energy efficient container handling, with one in four container movements around the globe being handled by a Kalmar solution.

RSP Asia GmbH

0A1-003

Address: 德国 图灵根-萨尔费尔德-佐姆斯尔伯特伦10号 Germany Thuringia-Saalfeld-Zum Silberstollen 10
Tel: 18950898993
Email: fujj@fjqiaolong.com
Web: www.rsp-germany.com

Russian Helicopters, JSC

0A1-004

Address: 俄罗斯 Russia Moscow-Moscow-Bolshaya Pionerskaya, 1
Tel: +86 17003889888
Email: Gecj@hangyuantech.com
Web: www.russianhelicopters.aero/en

Topflow Chi-Tech Limited

0A1-005

Address: 新西兰 New Zealand Auckland-Unit 9, 42 Ormiston Road, East Tamaki
Tel: +64 9 869 5016
Email: jo@hovercrafts.co.nz
Web: www.hovercrafts.co.nz

Airflow Hovercraft NZ Ltd is an international company with more than 20 years experience in the hovercraft industry. Airflow Hovercraft's model range includes the sporty two and four-seater Slider, the six-seater Discovery, the 12-seater Explorer, and the 5 to 40 tonne Atlas hover-platforms.

Bartholet Maschinenbau AG

0A1-006

Address: 瑞士 Switzerland Lochriet,CH-8890 Flums
Tel: 010-83918528
Email: lijunnan@norinco.cn
Web:

Leonardo S.p.A.

0A1-007

Address: 意大利 Italy Roma-Piazza Monte Grappa, 4-00195 Roma
Tel: （+86）021-68818837
Email: caoting@helibuy.com.cn
Web:

Leonardo is a global high-tech Aerospace, Defense and Security company. Leonardo is one of the top ten players in the world in Aerospace, Defense and Security, with revenues of 12.24 billion euros.

Art rebel 9

0A1-008

Address: 斯洛文尼亚 Slovenia Ljubljana-Ljubljana-Poljanska cesta 25
Tel: 386 (0) 1 236 16 80
Email: matjaz@artrebel9.com
Web: www.artrebel9.com

We are Art Rebel 9, pioneers of the creative use of advanced technologies. We create exceptional integrated solutions that exceed borders of imagination and help build the reputation of our business partners.

OLYMPIC COMMITTEE OF SLOVENIA-ASSOCIATION OF SPORTS FEDERATION

0A1-008

Address: 斯洛文尼亚 Slovenia 1000-LJUBLJANA-ŠMARTINSKA CESTA 140
Tel: +386 (0) 1 230 60 45
Email: matic.svab@olympic.si
Web: www.olympic.si

non-governmental sports organisation

Elan d.o.o.

0A1-008

Address: 斯洛文尼亚 Slovenia Begunje-Begunje1
Tel: +38645351116
Email: tine.demec@elan.si
Web:

Elan is a dedicated ski manufacturer in the Slovenian Alps, with more than 70 years of experience building the best skis in the world, for friends and families who live the skiing lifestyle and are all about good times in the mountains.

Arctur d.o.o

0A1-008

Address: 斯洛文尼亚 Slovenia Slovenia-Nova Gorica-Industrijska cesta 1a
Tel: 00386 5302907
Email: info@arctur.si
Web: www.arctur.si

For more than 25 years Arctur has been pioneering by the merging of research, science, art and business. The interdisciplinary spirit is the cradle of innovation in which concepts, solutions and products come to life under the motto: we don't follow the changes, we co-create them! Today Arctur has 40 employees, 80% of those with university degree education.

ALPI AVIATION

0A2-003

Address: 意大利 Italy Pordenone-San Quirino-Via dei Templari 24
Tel: 13611840271
Email: x.li@china-ccui.com
Web:

意大利阿尔卑斯航空飞行器制造公司(以下简称“ALPI”)成立于1999年，拥有广泛且安全性极高通航飞机产品线，主要业务是设计、生产以及销售轻型/超轻型飞机、轻型/超轻型直升机、军用无人机。ALPI在意大利无人机飞机市场中处于技术性领先位置，广泛运用于意大利等各国的军方、气象预测等领域，实现了研发、设计、制造、销售及维修的完整运营服务体系。
Since 1999, Alpi Aviation is a reference for those who want to approach the flight in an accessible, quality, safe and entertaining way. Success for Alpi Aviation is the pleasure of flying that is able to deliver to its customers. More than 1000 aircraft, with thousands flight hours logged, have been sold in 31 countries so far. Its UAV is widely used in the military in Italy and other countries.

ZkotZ d.o.o.

0A1-008

Address: 斯洛文尼亚 Slovenia Ljubljana-1000-Koprska 106d
Tel: 0038616203488
Email: eva@myequa.com
Web: www.myequa.com,www.goat-story.com

We focus on keeping people and nature healthy and offer products made of high-quality materials, locally produced and manually assembled. On top of that, we are very innovative and we always think big - we are trying to include technology in every day's products - smart coffee brewing machine and reusable smart water bottle.

阿吉斯(德国)装备制造进出口有限公司 / ARJES Import & Export S.a.r.l.

0A2-001

Address: 德国 Germany Luxembourg-30, Rue de Notre-Dame, L-2240
Tel: 010-85315355
Email: luotian0808@163.com
Web: www.arjes.dewww.arjeschina.com

德国阿吉斯(ARJES)装备制造集团是全球破碎和回收利用机械设备制造和应用技术先行者之一。目前是德国最具创新活力的金属固废处理和建筑垃圾粉碎设备生产厂家。德国阿吉斯(ARJES)装备制造集团非常看重中国国际进口博览会这一平台，根据中国政府对“无废城市”的环保要求，通过其大中华区独家总代理—阿吉斯高科技有限公司首次将全球首发的 IMPAKTOR 380 PLUS 建筑垃圾粉碎设备引入中国市场。
ARJES GmbH is one of the world's pioneers in the manufacture and application of crushing and recycling machinery. The company's predecessor was a family-owned company dedicated to metal solid waste dismantling after World War II. It is currently the most innovative and dynamic metal solid waste treatment and construction waste crushing equipment manufacturer in Germany.

普茨迈斯特控股有限公司 / Putzmeister Holding GmbH

0A3-002

Address: 德国 埃希塔尔-72631-Max-Eythstr 10 Germany Aichtal-72631-Max-Eythstr 10
Tel: 00497127 5996466
Email: jingchun.wei@sanyeurope.com
Web: www.putzmeister.com

普茨迈斯特有限公司成立于1958年，是一家拥有全球销售网络的集团公司。总部设在德国斯图加特附近。该集团公司已在世界上十多个国家设立了子公司。普茨迈斯特集团从事开发、生产和销售各类混凝土输送泵，工业泵及其辅助设备，这些设备主要用于搅拌和输送水泥、沙浆、脱水污泥、固体废物和替代燃料等粘稠性大的物质。
he Putzmeister Group develops and produces machinery of high technological quality in the fields of conveying viscous industrial materials through pipes, concrete placement and transporting excavated material from tunnels and below ground, Market segments include mining and tunneling, large industrial projects, power plants and sewage treatment plants, as well as waste incineration plants.

Muri design, Sandi Murovec s.p.

0A1-008

Address: 斯洛文尼亚 Slovenia Slovenia-Kranj-Sorlijeva 16
Tel: +386 41 535 777
Email: sandi.murovec@siol.net
Web: www.nakanto.si

SKI BUSINESS, EDUCATING, INOVATING, CONSULTING, SKI MANUFACTORING, PUBLISHING

EVERSTAR INDUSTRIES (PTY) LTD.

0A2-002

Address: 南非 South Africa JOHNNESBURGT-103 PARK AVENUE NORTH
Tel: 010-83918528
Email: lijunnan@norinco.cn
Web:

"Ever Star Industries began operations in South Africa in 2010 and soon became a well-established, highly regarded Original Equipment Manufacturer (OEM). Kits are brought to South Africa from its parent company in China, Beiben, after which they are assembled at the company's Pietermaritzburg plant.
This OEM has established 18 full dealers, that provide comprehensive aftersales services.

m-tec mathis technik gmbh

0A3-002(002)

Address: 德国 Germany Neuenburg am Rhein-Otto-Hahn-Straße 6
Tel: 0731-88948361
Email: zhaoyanbo@zoomlion.com
Web: m-tec.com

Since 1978, the brand m-tec has been synonymous with innovative solutions for manufacturing, logistics and processing of pre-mixed construction materials as well as fine-grained bulk materials. Around the globe, in almost 100 countries, m-tec improved, accelerated and economized building processes. m-tec is a mid-sized German company with subsidiary in Czech Republic.

Compagnia Italian Forme Acciaio S.p.A

0A3-003(001)

Address: 意大利 Italy MI-Senago -Via Stati Uniti d'America, 26 – 20030
Tel: 0731-88948461
Email: zhaoyanbo@zoomlion.com
Web:

CIFA is a company that for 90 years has been designing, producing and distributing innovation in the construction field. For a long time it has been proposing itself as full liner with a complete range of products for production, transportation, laying of concrete.

GF加工方案 / GF Machining Solutions

3A1-001

Address: 瑞士 Biel-Roger-Federer-Allee 7, 2504 Biel Switzerland Biel-Roger-Federer-Allee 7, 2504
Tel: 021-58685000-368
Email: eric.cao@georgfischer.com
Web: www.gfms.com

GF加工方案是一家提供整体解决方案供应商。作为全球领先的工模具制造和高精密零件制造的解决方案供应商。总部位于瑞士，在全球50个地区设有分支机构开展业务。我们在以下核心业务领域均位居一线品牌地位：电加工、铣削加工和主轴、激光纹理、增材制造、工装夹具和自动化以及客户服务。我们的愿景和价值观是成为全球高精密加工领域的卓越标杆企业。
GF Machining Solutions is the world's leading provider of machines, Automation solutions and services to the tool and mold making industry and to manufacturers of precision components. Based in Switzerland and maintaining a presence on 50 sites worldwide, GF Machining Solutions is a globally active group and source of strength to its customers.

MSP Drilex, Inc.

3A2-002

Address: 美国 United States of America Texas-Houston-14215 Westfair West Drive
Tel: 13761573982
Email: qining@msp-drilex.com.cn
Web:

Deere & Company

0A3-004

Address: 美国 United States of America IL-Moline-One John Deere Place
Tel: 010-59246935
Email: gaoamy@johndeere.com
Web: www.deere.com

世界五百强企业——约翰迪尔公司成立于1837年，总部位于美国伊利诺依州莫林市。182年来，约翰迪尔公司一直恪守并践行四个核心价值观：诚实、优质、守信、创新。到目前为止，约翰迪尔是全球农业、林业、工程、草坪景观工程领域的领先供应商、全球非道路用柴油发动机的领先制造商以及美国最大的设备融资公司之一。约翰迪尔的制造、销售、研发、信贷、零部件配送和其他主要运营机构遍布全球35个国家，全球员工总数6万余名。 John Deere is a world leader in providing advanced products and services for agriculture, forestry, construction, lawn and turf care, and landscaping , leading worldwide manufacturer of off-highway diesel engines and one of the largest equipment finance companies in the U.S. with operations in 35 countries and has more than 60,000 employees. In 2019, John Deere ranks 329 in Fortune 500.

SHELL MARINE PRODUCTS SINGAPORE

3A1-002

Address: 荷兰 Netherlands 9, North Buona Vista Drive #10-00, Tower 1, The Metropolis
Tel: 13564289133
Email: HONG-YI.LI@SHELL.COM
Web: www.shell.com

泰雷兹 / Thales Group

3A2-003(001)

Address: 法国 France Tour Carpe Diem, 31 place des Corolles
Tel: 010-83918523
Email: jessieyiou@163.com
Web: www.thalesgroup.com

泰雷兹是一家业务遍及各大洲的国际企业，所服务的五大业务市场对各国社会至关重要，包括航空、航天、地面交通、防务与安全以及数字安全。泰雷兹全球80000名员工遍布68个国家，2018年的销售收入达190亿欧元，每年投入自筹研发资金超过10亿欧元。
Thales is a global organization with operations on all continents serving five major markets, all of them of vital importance for our societies: aerospace, space, ground transportation, defense and security, and digital security. Thales generated revenues of €19 billion in 2018 with 80,000 employees in 68 countries, self-funded R&D exceeds €1 billion each year.

sports republic AB

0B1-003

Address: 瑞典 Sweden Stockholm-Stockholm-Repslagargatan 6
Tel: 17718346375
Email: erico@sports-republic.org
Web:

北欧万众之星海内外资金池超过50亿美元的规模，在张家口市高新区建设的国际冰雪运动装备产业基地已经投产运行。与IDG集团建立有合资公司，拥有50亿元产业基金助力冰雪项目孵化。针对中国政府冬奥庄严承诺三亿人上冰雪和助力冰雪运动发展，具有全面实质性资源平台及解决方案。有国际化教练群、完整系统化软件及科技支持培训。从省市队培训到冰雪进校园和建设冰雪运动特色学校/冬奥示范学校，全面系统中国的冰雪发展水平。
SPORTS REPUBLIC is sports industry advisory and concept development innovation agency from Nordic country Sweden. Its Europe-China Winter Sports Alliance Platform connects and facilitates resources exchanges for states, campus, athletes, industry players between China and Nordic. Sports Republic is the Nordic gateway leading kids and youth to learn and enjoy winter sports.

宝力机械有限公司 / PRO-TECHNIC MACHINERY LTD.

3A2-001

Address: 香港地区 香港新界葵芳兴芳路223号新都会广场二座3808室 Hong Kong UNIT 3808 TOWER II LEVEL 38 METROPLAZA 223 HING FONG ROAD KWAI CHUNG
Tel: 852-24282727
Email: main@protechnic.com.hk
Web: www.protechnic.com.hk

「宝力机械有限公司成立于1977 年迄今逾四十年，是中国及香港地区主要自动化设备集成及机械代理商。为中港两地厂家服務,引进世界各地精良机械、先进技术及提供优质的售前及售后服务。产品包括: 模具加工机械、金属成形机械、金属切削机械、电子贴装设备、自動化生产线、精密注塑机、机械人应用技术、3D打印技术、三维扫描、快速模具技术、激光立体雕刻、CAD/CAM软件、精密计量仪器、精密刀具及附件等。
Pro-Technic Machinery Ltd. is the reputable machinery dealers in Hong Kong Region and China, importing various precision machinery from all over the world and providing expertise in pre-sales and after-sales service over 40 years since 1977. Now Pro-Technic also act as role of system integrator. Represented product cover Automation Production Line, Robot application technology etc.

海瑞克股份公司 / Herrenknecht AG

3A2-003(002)

Address: 德国 Germany Schlehenweg 2 77963 Schwanau-Allmannsweier
Tel: 010-65675088
Email: Song.Cora@herrenknecht.com
Web: www.herrenknecht.com

凯毅德 / Kiekert AG

3A2-003(003)

Address: 德国 Germany Heiligenhaus-Hoeseler Platz 2, 42579
Tel: 86 512 5235 2501
Email: phoebe.yu@kiekert.com
Web: www.kiekert.com

凯毅德成立于1857年，总部位于德国海利根豪斯，是全球汽车门锁系统的技术先导者。凯毅德活跃于11个国家，拥有6500名员工，在八个生产中心、七个研发中心和三个销售中心全天候研发、生产和销售量身定制的客户解决方案，是全球领先汽车生产商的首选合作伙伴。
As the technology leader of global automotive locking systems, Kiekert' s success story began in 1857. Today, the automotive supplier is the first choice among leading vehicle manufacturers around the world, employing 6,500 people in eleven countries. Kiekert develops, produces and markets tailor-made customer solutions at eight production sites, seven development centers, and three sales centers.

德国FAM公司 / Magdeburger Foerderanlagen und Baumaschinen GmbH

3A2-003(006)

Address: 德国 萨克森安哈尔特州-马格德堡-德国马格德堡苏登堡五河内大街47号 Germany Saxony-Anhalt-Magdeburg-Sudenburger Wuhne 47, D-39112, Magdeburg, Germany
Tel: 010-83516061
Email: Pangx@wbmining.com
Web: www.fam.de

德国FAM公司成立于1838年，位于德国中部的马格德堡，是从事物料处理及输送设备设计制造的专业化公司，是物料输送及处理设备领域的技术领先企业。德国FAM公司在全球各大洲拥有分布广泛的销售网络，泛玛散料处理技术（北京）有限公司是FAM在中国的全资子公司。德国FAM公司在欧洲和北美地区占据了很高的市场份额，在亚洲和南美等地同样拥有着良好的业绩。
FAM is one of the foremost companies in materials handling systems, and owns various subsidiaries and representative offices worldwide. FAM delivers the vital “hearts” for bulk handling plants in mining industry, power plants, metallurgical industry, cement industry, building material industry, chemicals industry, and fertilizer industry and for port handling.

奥地利安德里茨股份有限公司 / ANDRITZ AG

3A2-003(009)

Address: 奥地利 格拉茨-斯塔特格尔大街18号 Austria Graz-Stattegger Strasse 18 8045
Tel: 010-83516061
Email: Pangx@wbmining.com
Web: www.andritz.com

安德里茨集团是全球领先的国际技术集团，为各行业提供一流的工厂、系统、设备和服务。其业务广泛涉及水电、制浆造纸、金属行业以及市政和工业领域的固/液分离，其他重要的业务领域包括动物饲料和生物质造粒及自动化设备，并成为上述行业的技术和全球市场领导者。安德里茨旗下子品牌Metris为以上业务板块提供广泛的工业物联网创新产品及服务。
ANDRITZ is an international technology group providing plants, systems, equipment, and services for various industries. The company is one of the technology and global market leaders in the hydropower business, the pulp and paper industry, the metal working and steel industries, and in solid/liquid separation in the municipal and industrial segments.

伊拉克石油营销公司SOMO / Oil Marketing Company SOMO

3A2-003(004)

Address: 伊拉克 巴格达市-"扎尤那区（穆阿塔西姆区），穆萨纳·本·哈里斯·沙伊巴尼路，17号巷，742号，5118号信箱 " Iraq Baghdad-Muthanna Ben Harith al-Shaibani, Street, P.O. Box 5118 Zayouna / Mutasim district
Tel: 010-63210030
Email: Sunxiaoling@zhenhuaoil.com
Web:

Oil Marketing Company SOMO, one of the most important companies in the Iraqi oil sector, It is the only official company legally authorized to negotiate conclude Iraqi laws crude oil sales contracts as well as oil products contracts in accordance with international standards. All Iraqi crude oil and natural gas exports are coordinated by the company.

JOLLY SCARPE S.P.A.

3A2-003(007)

Address: 意大利 Italy Via Feltrina Sud, 172-31044 MONTEBELLUNA (TV) ITALY
Tel: 010-83512635
Email: Jjh@northexpo.com.cn
Web:

For over 35 years now JOLLY SCARPE SPA has been an important supplier of professional footwear for people who dedicate their lives to the protection and safety of their fellow citizens. Research, technological advances, innovative materials, safety, comfort and service are the fundamental elements that characterize Jolly Scarpe.

哈萨克斯坦KAM公司 / LLP JV KUATAMLONMUNAI

3A2-003(010)

Address: 哈萨克斯坦 克孜洛尔达州-克孜洛尔达市-萨务列区，阿曼格里大街，108号 Kazakhstan kyzylorda-kyzylorda-108G,Amangeldy str., Saulet micro district
Tel: 010-63210030
Email: Sunxiaoling@zhenhuaoil.com
Web:

KuatAmlonMunai LLP（KAM）是的一家位于哈萨克斯坦克孜勒奥尔达州的独立油气勘探开发公司。总部位于克孜勒奥尔达市，另外在阿拉木图和阿斯塔纳设有代表处，公司员工共计约560人。公司主要资产为Konys&Bektas油田，位于Kyzylorda市以北约120公里的南图尔盖盆地，勘探开发区域面积约200平方公里。
KuatAmlonMunai LLP (KAM) is an independent petroleum exploitation and exploration company in Kyzylorda State, Kazakhstan. It has an headquarter office in Kyzylorda city and two other representative offices in Astana and Almaty city with about 560 employees in total. The main asset is the Konys and Bektas field which is located in the South Turgai Basin, about 120 km to the north of Kyzylorda City.

耐普集团 / Knight Piésold Pty. Ltd.

3A2-003(005)

Address: 澳大利亚 西澳大利亚-东珀斯-阿德莱德路184号，1楼 Australia Western Australia -East Perth-Level 1/184 Adelaide Terrace
Tel: 010-83516061
Email: Pangx@wbmining.com
Web: www.knightpiesold.com

耐普集团是一家由员工拥有的全球性咨询公司，为矿业、电力、水利、基础设施、石油和天然气行业提供专业服务。我们的工程师、环境科学家、地质学家和技术专家专注于对项目的每个阶段提供优质、可持续发展和具有成本效益的方案。自从1921年在南非成立以来，我们公司已在北美、南美、欧洲、非洲、澳洲和亚洲设立办事处，形成了一个由750多名专业人员组成的全球服务网络。
Knight Piésold is an employee-owned global consulting firm that provides specialized services to the mining, power, water resources, infrastructure, and oil and gas industries. We are engineers, environmental scientists, geoscientists, and technologists who focus on creating value at every stage of a project through quality-driven, sustainable, and cost-effective solutions.

第一矿业公司 / No.1 Mining Enterprise

3A2-003(008)

Address: 缅甸 内比都-第19号办公楼 Myanmar NayPyiTaw-Office No.(19)
Tel: 010-83516061
Email: Pangx@wbmining.com
Web:

第一矿业公司（ME1）为缅甸自然资源与环境保护部下属企业，经营范围包括铜、镍、铅、木化石等矿产资源开发及贸易。
No.1 Mining Enterprise (ME1) is a subsidiary of the Ministry of Natural Resources and Environmental Conservation of Myanmar. It does business in fields including development and trade of mineral resources such as copper, nickel, lead, wood fossils, etc.

美国减振技术公司 / SOCITEC USA

3A2-003(011)

Address: 美国 United States of America 2443 Braga Drive Broadview, IL 60155-3941
Tel: 010-68137831
Email: renyuqing@norinco-tech.cn
Web:

法国减振技术公司 / SOCITEC FRANCE

3A2-003(012)

Address: 法国 巴黎-奥弗斯埃斯蒂安街11-13号 France PARIS-11-13 Rue D'ESTIENNE D'ORVES
Tel: 010-68137831
Email: renyuqing@norinco-tech.cn
Web:

埃尼集团 / ENI S.p.a

3A2-003(015)

Address: 意大利 Rome-亨利·马泰广场100144号 Italy Rome-Piazzale Enrico Mattei, 100144
Tel: 010-63210030
Email: Sunxiaoling@zhenhuaoil.com
Web:

We are one of the global oil and gas super-players, operating in oil and gas exploration, production, refining and selling operations, electricity and chemistry.
Eni carries out oil and gas exploration, development and extraction in 43 countries, trades in oil, gas, LNG and electricity in 28 countries and sells high-quality fuels and lubricants in 33 countries.

密克微测有限公司 / Mikrometry GmbH

3A3-003

Address: 德国 巴登州-内卡河畔艾斯林根市-鲍姆维持大街34号 Germany Baumr eute 34,73730 Essligen am Neckar
Tel: 0769-33295290
Email: 18588216886@163.com
Web: www.mikrometry.de

密克微测有限公司专注于模具零件、自动化零件、电子接插件、汽车零件、塑料薄膜等行业的精密测量。我们公司目前有Advantage、Classic、Pro、Normal四大系列产品，分辨率从0.01μm到1.0μm，精度从4.0μm到0.5μm，测量力从2.0N到0.6N。该系列产品具有高精度、高稳定性、高性价比的特点，可以满足大部分客户的高精度测量需求。
Mikrometry GmbH focuses on precision measurement of die parts, automatic parts, electronic connectors, automotive parts, plastic film and other industries.We have four series of products, Advantage, Classic, Pro and Normal, with resolution ranging from 0.01um to 1.0um, precision ranging from 4.0um to 0.5um and measuring force ranging from 2.0N to 0.6N. This series of products have the characteris

阿特迈斯 / ATERMES

3A2-003(013)

Address: 法国 France MONTIGNY-LE-BRETONNEUX-4 AVENUE DES TROIS PEUPLES 78180
Tel: 010-83918523
Email: jessieyiou@163.com
Web: www.atermes.fr/fr/index

近30年来，阿特迈斯是全球诸多企业的工业合作伙伴，得益于其在高技术和系统集成方面的专业技能，阿特迈斯提供了从上游设计到长寿命维护周期的高性能和有吸引力的解决方案。凭借多年的经验和公认的专业知识、全新的解决方案，结合具有吸引力和创新性的技术，阿特迈斯正在成为客户需要操作和解决方案以掌握边界和区域的关键参与者。

SEMI

3A3-001

Address: 美国 United States of America California-Milpitas-673 South Milpitas Blvd. Milpitas, CA 95035, USA
Tel: 86.21.6027.8527
Email: jge@semi.org
Web: www.semi.org

SEMI连接2100多家会员企业和全球130万专业人士来推进科学和电子制造行业进步。SEMI会员企业负责设备、材料、设计、软件、器件和服务方面的创新，让电子产品更智能、更快、更多功能、性价比更高。
SEMI® connects more than 2,100 member companies and 1.3 million professionals worldwide to advance the technology and business of electronics manufacturing. SEMI members are responsible for the innovations in materials, design, equipment, software, devices, and services that enable smarter, faster, more powerful, and more affordable electronic products.

ASM Pacific Technology

3A3-003

Address: 新加坡 Singapore Singapore-2 Yishun Avenue 7
Tel: 021-50805465
Email: tmli@asmpt.com
brian.ling@asmpt.com
Web:

意大利流体能源公司 / ITALFLUID GEOENERGY S.R.L.

3A2-003(014)

Address: 意大利 泰拉莫-诺塔雷斯科-阿特里 Italy Teramo-Notaresco - 64024-S.P. 553 per Atri
Tel: 010-63210030
Email: Sunxiaoling@zhenhuaoil.com
Web:

意大利流体能源公司是一家从事石油行业的意大利服务公司，主要从事以下领域的业务：油井的生产测试；早期生产和长期生产试验；油井的测量和检查(读出，记忆计)；气体脱硫；设计和机械工程；工艺工厂和碳氢化合物加工的设计、建造和维护。
Italfluid is an Italian services company that has been operating in the oil industry.It mainly specializes in the following fields of activity: Production testing of oil wells;Early production and long production test;Measures and checks in wells;Gas Desulfurization;Design and mechanical engineering;Design, construction and maintenance of process plants and hydrocarbon processing

Xilinx

3A3-002

Address: 美国 United States of America CA-San Jose-2100 Logic Drive
Tel: 010-82366600
Email: webmarketing_apac@xilinx.com
Web: china.xilinx.com
www.xilinx.com

赛灵思是 FPGA、可编程SoC及ACAP 的发明者。我们高度灵活的可编程芯片由一系列先进的软件和工具提供支持，驱动着广泛的行业和技术的快速创新 - 从消费电子到汽车电子再到云端。赛灵思为业界提供了最灵活的处理器技术，通过灵活应变、万物智能的计算技术实现着行业的快速创新.
Xilinx is the inventor of the FPGA,programmable SoCs and now the ACAP.Our highly-flexible programmable silicon,enabled by a suite of advanced software and tools,drives rapid innovation across a wide span of industries and technologies-from consumer to cars to the cloud.

法孚集团 / Fives

3A4-001

Address: 法国 France Paris-3 rue Drouot 75009
Tel: 86 21 6043 6262
Email: fiveschina@fivesgroup.com
Web: www.fivesgroup.com

法孚是一家工业工程集团，拥有传承超过200年的卓越历史。法孚在不同领域为全球最大的工业集团设计和供应机械、工艺设备和生产线，行业涉及钢铁、航空航天与特殊机床、制铝、汽车与相关制造业、水泥、能源、物流和玻璃等。
As an industrial engineering Group with a heritage of over 200 years, Fives designs and supplies machines, process equipment and production lines for the world' s largest industrial players in various sectors such as steel, aerospace and special machining, aluminium, automotive and manufacturing industries, cement, energy, logistics and glass.

川崎重工业株式会社 / Kawasaki Heavy Industries, Ltd.

3A4-002

Address: 日本 兵库县-神户市-中央区东川崎3-1-1 Japan Hyogo Prefecture-Kobe City-3-1-1 Higashi Kawasaki Chuo-ku
Tel: +81-334352127
Email: sakurai_shinobu@khi.co.jp
Web: global.kawasaki.com.cn/cn/ global.kawasaki.com/en

川崎重工与日本国内外100多个关联企业构成了技术企业集团”。发挥在一个多世纪的发展历史中历炼的技术实力，不仅涵盖陆、海、空、而且包括宇宙空间以及深海，向广阔的领域提供丰富的产品。川崎重工通过开展无以类比的独特且广泛的事业，不断向解决客户及社会课题、创造新价值的目标发出挑战。
Together with about 100 group companies in Japan and overseas, Kawasaki Heavy Industries oversees the formation of a "technology corporate group." Our technological capabilities, polished over a history that exceeds a century, send diverse products forth into wide-ranging fields that go beyond land, sea, and air, extending from the ocean depths to space.

Dürkopp Adler Group

3A4-003

Address: 德国 Germany Potsdamer Str. 190, 33719 Bielefeld, GERMANY
Tel: 021 6393 8822 - 203
Email: kayi0404@dap-china.com
Web: www.duerkopp-adler.com

Dürkopp Adler AG, founded in Bielefeld in 1860, is the largest European manufacturer and one of the worldwide leaders in industrial sewing technology.The product portfolio of the enterprise includes industrial sewing machines and automats of high technological quality for a multitude of applications like automotive, garments, upholstery, technical textiles, shoes as well as leather goods.

上银科技股份有限公司 / HIWIN TECHNOLOGIES CORP.

3A4-004

Address: 台湾地区-台中市-40852 精密機械園區精科路7號 Taiwan-Taizhong-No. 7, Jingke Road, Taichung Precision Machinery Park, Taichung 40852
Tel: 0512-80685599
Email: wanggui@hiwin.cn
Web: www.hiwin.cn

HIWIN为全球传动控制与系统科技领导品牌，专注于高速，高精密，环保节能特性之关键零组件，主要研发及生产:滚珠丝杠,直线导轨,动力刀座,特殊轴承，工业机器人，医疗机器人及直线电机等高阶精密型产品。HIWIN整合全球资源，致力于智慧自动化创新研发，拥有全世界最完整机器人种类，包含晶圆，关节式,并联式与史卡拉机器人,为客户提供工业4.0高附加价值的完整解决方案。
HIWIN Technologies Corp. is the leading brand of motion control and system technology manufacturer.Products range from ball screw, guideway, bearing to industrial/medical robot, rotary table,with characteristics of high speed, high precision, multifunction, and eco-friendly. HIWIN commits to intelligent automation and has the most complete type of robot,including wafer, 6-axis, Delta, SCARA and

兄弟工业株式会社 / BROTHER INDUSTRIES,LTD.

3A4-005

Address: 日本 爱知县-名古屋-日本国名古屋市瑞穗区苗代町15番1号名古屋 Japan Aichi-ken- Nagoya-15-1 Naeshiro-cho, Mizuho-ku, Nagoya, 467-8561, Japan
Tel: 021-31332101-214
Email: gu.hui@brother.cn
Web: www.brother.cn

The Brother Group started by providing repair services for sewing machines in 1908. From printers and sewing machines, machine tools, industrial sewing machine, label printers, communication system for karaoke, etc., we will continue to challenge with efforts to the customer- first policy.

沪工国际(香港)有限公司 / HUGONG INTERNATIONAL (HK) CO., LIMITED

3A4-006

Address: 香港地区 香港-德辅道中161-167号香港贸易中心5楼全层 Hong Kong Hong Kong- Hong Kong- 5/F Hong Kong Trade Centre, 161-167 DesVoeux Road Central
Tel: 021-51216666-8831
Email: jufang.xue@hugong.com
Web: www.hugongwelds.com

Hugong is an industrial equipment enterprise group integrating R&D, production and investment. Since its beginning in 1958, it provides the total welding and cutting solutions from the DIY to heavy industrial market. The company's business covers military, welding and cutting, aviation, automobile body assembly lines and other fields. Hugong sales network has expanded into more than 110 Countries.

安姆科 / Amcor

3A5-001

Address: 瑞士 Switzerland Thurgauerstrasse 34 CH-8050, Zürich
Tel: 18616879978
Email: jessica.chen@amcor.com
Web: www.amcor.com

Amcor是全球最大的消费品包装公司，产品涉及食品、饮料、医药、医疗器械、家庭与个人护理用品、功能性薄膜等行业，为客户提供创新的包装产品和包装解决方案。
Amcor is a global leader in developing and producing responsible packaging for food, beverage, pharmaceutical, medical, home- and personal-care, and other products.

住友重机械工业株式会社 / Sumitomo Heavy Industries,Ltd.

3A5-002

Address: 日本 东京都品川区大崎2-1-1，ThinkPark Tower Japan ThinkPark Tower 1-1,Osaki 2-Chome Shinagawa-Ku,Tokyo 141-6025,Japan
Tel: 021-34627877
Email: shirley.sun@shi-g.com
Web: www.sumitomodrive.com

住友集团拥有400多年历史，住友重机械是集团企业之一，住友减速机的主要产品及分类，分为MCD精密传动，SGM小型齿轮电机，MGM中型齿轮电机，GB齿轮箱，行星减速机。住友减速机“Sumitomo drive technologies”的海外遍及世界50个国家。其中9个海外总部，18个制造工厂和39个装备工厂，250个销售办事处。向当地提供服务。同时，为适应各国特有的需求及不同需求的客户，我们提供因地制宜的服务。
Sumitomo group has already been established more than 400 years. Being the one of important member of Sumitomo group, Sumitomo drive technologies has nearly 100 years experience in power transmission and control devices area. The global Sumitomo Drive Technologies web extends to 50 countries with 9 main hubs, 18 manufacturing plants, 39 assembly plants, and 250 sales offices.

LISTA AG

3A5-003

Address: 瑞士 Switzerland Fabrikstrasse 1 CH-8586 Erlen
Tel: 86 571 8529 3419
Email: tom.tang@greatstartools.com
Web: www.lista.com

LISTA是全球领先的工作存储解决方案提供商和制造商，旗下LISTA品牌系欧洲专业工作存储设备第一品牌，欧洲市场占有率位居同类产品第一位，客户包括欧洲知名汽车公司如戴勒姆奔驰、大众、宝马，主流航空公司和飞机公司如空客、荷兰皇家航空、德国航空，高端工业级客户如BOSCH、ABB，欧洲顶尖奢侈品牌如百达翡丽、卡地亚、路易斯威登，欧洲知名金融机构和博物馆如瑞士信贷、大英博物馆等。
LISTA is the recognized market leader in Europe in respect to workspace and storage equipment. The products are enjoyed today by over 100 000 satisfied customers in a variety of different industries, including Mercedes-Benz, BMW, Ferrari, Lufthansa, Airbus, UBS, PWC, BOSCH, ABB, Merck, Novartis, Louis Vuitton, Patek Philippe, British Museum, etc.

德中工商大会 / Deutscher Industrie- und Handelskammertag

3A5-005(001)

Address: 德国 Germany Berlin-Berlin-Breite Straße 29
Tel: +86-21 3858 5019
Email: dong.yini@sh.china.ahk.de
Web: www.china.ahk.de

DIHK是德国工商大会。主要的职责是德国79个工商会的总团体组织。GIC是DIHK海外分支机构的服务供应商，为92个国家的140多个办公室提供支持和服务。
The Association of German Chambers of Commerce and Industry (Deutscher Industrie- und Handelskammertag, DIHK) is the central organisation for 79 Chambers of Commerce and Industry, CCI (Industrie- und Handelskammern, IHKs) in Germany. GIC is the service provider for the German Chambers of Commerce Worldwide Network(AHK) which includes 140 offices in 92 countries.

KNIPEX - Werk C. Gustav Putsch KG

3A5-005(002)

Address: 德国 Germany Nordrhein-Westfalen-Wuppertal-Oberkamper Str.13, 42349
Tel: +86 21 58998010
Email: cherry.shen@knipex.com.cn
Web: www.knipex.de

德国凯尼派克创立于1882年,是钳类产品在欧洲的龙头家族企业，产品广泛应用于各行各业。日产约45,000把超过1,000多种不同规格种类的钳子适用于各个专业领域的应用。凯尼派克超过60%产品远销世界上100多个国家，并在多个地区设有自己的分支机构，包括美国、俄罗斯、墨西哥、日本和中国等。
KNIPEX-Werk C. Gustav Putsch KG (founded in 1882) is the leading company for pliers for use in industry, trades and crafts. Over 45,000 pliers are produced in this family-run enterprise every day. The range covers around 1,000 articles for every area of application. KNIPEX is represented in 100 countries today and has its subsidiary company in China started from 2005.

DRD Kohlenbergwerk Automation GmbH

3A5-005(003)

Address: 德国 Germany 40239 Düsseldorf - Graf-Recke-Straße 82
Tel: 010-65139177
Email: bj_drd2018@163.com
Web: www.drd-automation.com

DRD Kohlenbergwerk Automation GmbH located in the famous Ruhr Industrial District of Germany. It was incorporated in Dusseldorf, Germany in 2014 and is a limited company integrating scientific research, design, production and sales. DRD has always insisted on providing high-quality products for all households. This concept has been combined with innovation for the benefit of customers.

卡尔克鲁斯焊接技术有限公司 / Carl Cloos Schweisstechnik GmbH

3A5-005(004)

Address: 德国 黑森州-海格尔市-德国海格尔市 D-35708卡尔克鲁斯大街1号 Germany Hesse-Darmstadt-Haiger-Carl-Cloos-Strasse1/35708 Haiger Germany
Tel: 010-61509012
Email: lijing@cloos.cn
Web: www.cloos.cn www.cloos.de

制造焊机、焊接机器人、焊接操作保护用具、焊接和切割设备;销售焊机,焊接机器人,焊接操作保护用具、焊接和切割设备；制造及销售与焊接和切割技术相关的计算机软件和硬件；提供焊接和切割设备的安装、保养和修理服务；从事机器设备及相关消耗品、备用件的批发及进出口、佣金代理（拍卖除外、进出口不涉及国营贸易管理商品、涉及配额、许可证管理商品的，按照国家有关规定办理申请）；提供经济信息咨询和工业业务运作咨询服务；提
Cloos welding machine is one of the world's earliest adopts digital control multifunction welding machine, in the history of welding power source is always in a leading position, now Cloos welding machine has a large user base in the similar products, users of its function diversity, rich and practical professional program, the long-term reliability, durable sex to give a high evaluation. Aftere

RIEBERG Brand Factory 1971 GmbH

3A5-005(005)

Address: 德国 Germany NRW-Soest-Coesterweg 45
Tel: +49 2921 3509740
Email: mriemen@rieberg.de
Web: www.rieberg.de

RIEBERG is a value-added service provider for sales and marketing services in German retail or export to China.

HPE Hybrid Port Energy

3A5-005(006)

Address: 德国 Germany Hamburg-Hamburg-Blohmstrasse 23,21079
Tel: +4940241997644
Email: cli@hybrid-port-energy.com
Web: www.hybrid-port-energy.com

HPE Hybrid Port Energy (哈堡能源科技) 是贝克尔船舶系统 (Becker Marine Systems) 创建的子公司，旨在给靠港船舶提供绿色环保的岸电解决方案。鉴于目前国际各大港口倾力于改善其持续恶化空气质量的问题，HPE哈堡能源科技由此希望能竭诚助力各大港口实现此目标。
HPE Hybrid Port Energy was founded by Becker Marine Systems with the objective of supplying environmentally friendly maritime power. Many port cities suffer from increasingly poor air quality, the goal of HPE Hybrid Port Energy therefore is to remedy this situation.

PLANETA Hebetechnik GmbH

3A5-005(007)

Address: 德国 Germany Herne-Resser Strasse 17
Tel: +49 2325958057
Email: roland.hessels@planeta-hebetechnik.de
Web: www.planeta-hebetechnik.de

Planeta Hebetechnik GmbH成立于1861年是世界上最早的行星升降机制造商之一，目前是德国领先的起重设备制造商之一。我们最先进的产品代表了最新的技术，并以其质量而闻名。
Planeta Hebetechnik GmbH, founded in 1861 as Wilhelmi, producing one of world' s first planetary hoists, is today one of the leading German original manufacturers of lifting equipment. Our state of the art products do represent the latest technology and have a renowned name for its quality.

CMC GmbH & Co. KG

3A5-005(008)

Address: 德国 Germany Baden-Württemberg-Fellbach-Stuttgarter Str. 106
Tel: +49 (0)711 4400799 0
Email: info@cmc-modelcars.de
Web: www.cmc-modelcars.de

Founded in Stuttgart. CMC started developing and manufacturing high-end model cars in 1985. Crafted by hand primarily 1:12 and 1:18 scales, CMC precision models feature intricate detailing and authentic replication of classic vintage cars that are milestones in automobile history and culture. CMC is synonymous with passion for an integration of German precision and Chinese craftsmanship.

SHIN NIPPON KOKI CO., LTD.

3A5-006

Address: 日本 Japan Osaka,-Sakai,-500-1, Takao 2-Cho, Minami-ku,
Tel: 021-62087192
Email: cailingfeng@snkcn.com
Web: www.snkc.co.jp

永进机械工业股份有限公司 / Yeong Chin Machinery Industries Co., Ltd.

3A6-001

Address: 台湾地区 台中市-台中市神冈区和睦路一段888号 Taiwan Taiwan-Taichung-No. 888, Sec. 1, Homu Road, Shengang District,
Tel: 021-69170707-9810
Email: feifei.wang@ycmcnc.com
Web: www.ycmcnc.com

SKL Technologies Germany GmbH

3A6-002

Address: 德国 Germany Nordrhein-Westfalen-Koeln-charlotten Str.61
Tel: 021-61650612
Email: susheng@sklgroup.de
Web: www.sklgroup.de

SKL GERMANY is a high-quality bearing manufacturer, established in Leverkusen Germany in 1958.We produce all kinds of standard and special bearings for industrial applications for over fifty years,SKL brand has established certain bearing reputation on the international market and become widely recognized quality brand.

IMST GmbH

3A6-003

Address: 德国 Germany North Rhine-Westphalia-47475 Kamp-Lintfort-Carl-Friedrich-Gauss-Str. 2-4
Tel: +49 2842 981-191
Email: jablonka@imst.de
Web: www.imst.com

IMST GmbH, Germany is a research-driven industrial engineering and design house specialising in radio technologies and microelectronics.Our target customers range from small companies to international corporations. Our goal is complete customer satisfaction.

Conquip Engineering Co. Ltd.

3A6-004

Address: 香港地区 HongKong China Tsuen Wan-Rm 729 Thriving Industrial Centre
Tel: +85296466241
Email: wallace@conquip.com.hk
Web:

Conquip Engineering was founded in 1981. We specialise in designing, manufacturing, supplying and providing customised solutions for concrete batching and mixing, material handling, environmental protection and mining related engineering consulting, equipments and solutions.

SECO/WARWICK S.A.

3A6-005

Address: 波兰 Poland-66-200 wiebodzin，-8 Sobieskiego Str., Poland Poland-66-200 wiebodzin, -8 Sobieskiego Str.,
Tel: 022-23828300
Email: China@secowarwick.com
Web: www.secowarwick.cn

西科沃克作为创新型金属热处理设备的技术领先者，致力于提供5大领域一体化解决方案：真空热处理、气氛热处理和铝热处理、铝热交换器可控气氛钎焊和真空冶金技术。
西科沃克集团在全球三个大洲拥有10家子公司，服务于全球70多个国家的客户。公司通过不断创新和改进，为客户提供标准化和定制化的热处理设备和技术，助力客户领先行业发展。
SECO/WARWICK is a technological leader in innovative heat processing solutions. Expertise includes end-to-end solutions in 5 categories: vacuum heat treatment, atmosphere and aluminum thermal processing, controlled atmosphere brazing of aluminum heat exchangers and vacuum metallurgy.

KraussMaffei Technologies GmbH

3A6-006

Address: 德国 Germany Munich-Krauss-Maffei-Straße 2, 80997
Tel: 021-50509610-801
Email: joyce.tao@kraussmaffei.com
Web:

克劳斯玛菲是全球塑料和橡胶生产、加工机械机器和系统的领先制造商之一。我们的品牌代表着尖端技术，创立至今已有180年的历史。我们提供的服务涵盖所有领域的注塑成型机械设备、挤出技术和反应成型机械设备。这让克劳斯玛菲在行业中脱颖而出。
KraussMaffei is among the world's leading manufacturers of machinery and systems for the production and processing of plastics and rubber. Our brand stands for cutting-edge technologies – for more than 180 years. Our range of services covers all areas of injection molding machinery, extrusion technology and reaction process machinery. This gives KraussMaffei a unique selling point in the industry.

A&V Waterjet Tech Inc

3A6-007

Address: 美国 United States of America Wisconsin-Milwaukee-10501 Commerce Street, Mequon, WI 53092
Tel: +86-24-24699053
Email: tina@apw.cn
Web: www.avwaterjet.com

爱迪威水射流技术有限公司成立于2009年。公司总部坐落于美国威斯康星州Germantown，是全球领先的数控超高压水切割机制造商。公司在研发方面投入巨资，致力于打造世界顶级的超高压水切割机产品。通过精细的财务管理和成本计算，爱迪威公司逐渐成长为全球最具竞争力的数控超高压水切割机制造商之一。
A&V Waterjet Tech Inc., located in Germantown, Wisconsin, is a leading high tech manufacturer of CNC high-pressure abrasive waterjet cutting machines. A&V Waterjet Tech. Inc has invested heavily on research and development, our top notch CNC waterjet machines are one of the best in Waterjet machines.

First Environment Performance GMBH

3A6-008

Address: 德国 Germany Stuthagen 28 24113 Molfsee
Tel: 021-56423331
Email: vicky@shrichlife.com
Web:

Rhein Koester GmbH

3A6-009

Address: 德国 Germany Bavaria- Munich-Carl-Zeiss-Ring13，Ismaning，
Tel: 0533-3591061
Email: honglei.wang@rheinchina.com
Web: www.rhein-koester.com.cn/ www.rhein-koester.com

德国莱茵科斯特有限公司成立于1986年，总部位于慕尼黑，公司致力于智能制造数字化工厂研发设计实施、智能制造技术转移与公共服务平台建设运营以及智能制造技术人才培养体系整体输出。德国莱茵科斯特是德国工会IHK/AHK、山东省人社厅、德国西门子、德国史太白战略合作伙伴，是智能制造教育培训领域的“隐形冠军”。
Rhein-koester was founded in 1986, the company is headquartered in Munich. The company is dedicated to the R & D design and implementation of intelligent production of digital factory,transfer of intelligent manufacturing technology transfer , construction and operation public service platforms, as well as overall output of intelligent manufacturing technology personnel training system.

Launch Technologies SA

3A6-010

Address: 南非 South Africa Gauteng-Bedfordview-23 Boeing Road west
Tel: 0113973073
Email: yan.launch@gmail.com
Web:

Auto tools manufacturing and designing

IMT CO.,LTD / IMT CO.,LTD

3A6-011

Address: 日本 Japan Wakayama-Hidaka-gun-1333 Nishinoji Inami-cho
Tel: 021-62863152
Email: hufangjing@e-imt.co.jp
Web: e-imt.co.jp

For many years, IMT CO.,LTD has provided production facilities for the semiconductor and LCD panel industries.Offering in-house mechanical and electrical design as well as machine assembly engineers.We have strived to meet customer reguests with attention to detail and in a timely manner througu our small but consistent manufacturing system.

西刻标识集团 / SIC MARKING SAS

3A6-012

Address: 法国 France POMMIERS-POMMIERS-ZAC Bel-Air - 195, rue des Vergers - F69480
Tel: 021-61645600-206
Email: sales-support@sic-marking.cn
Web: www.sic-marking.com

SIC Marking is an international company developing innovative permanent marking solutions and automated identification (i.e. datamatrix) for the complete traceability of industrial components. For over 25 years, SIC Marking has engineered a full range of exclusive marking machines: dot-peen, scribing, and laser marking systems.

BURACCO / BURACCO sas

3A6-013

Address: 法国 蒙特谢莱丝美恩斯（Montceau les mines）-策兹-雷库耶-扎-勒-佩龙街道 France rue chez Lécuyer za le prélong - bp 6 71300 Montceau-les-Mines
Tel: 010-85725628
Email: 972653019@qq.com
Web: www.buracco.com

BURACCO是欧洲知名的阀门制造企业，成立于1887年，已有130多年的历史，公司总部及制造工厂位于法国里昂。BURACCO在中国北京、上海，西安，成都设有负责销售的分支机构，BURACCO已发展成为一个由研发、设计、制造、检验、营销为一体的国际化阀门公司。公司现代化的厂房可以生产、组装、测试、喷砂超重和大尺寸的阀门。产品广泛应用于热力、电力、石油化工、煤化工、钢铁冶金等工业领域。
With its 130 years of existence, Buracco is an expert in his sector, from standard to specific products. Buracco provides dedicated monitoring solutions, through an involved commercial team and a specialized technical service.

德国宝德斯有限责任公司 / BCDS Gesellschaft für Beratung Controlling Datenverarbeitung Systemvertrieb mbH

3A6-014

Address: 德国 Germany Saarland -Saarbrücken-Neue-Brauerei-Str. 2-4
Tel: 06831 96300
Email: dw@sdyzty.com
Web:

印尼泓泰塑料再生有限公司 / PT. ECO RAMAH LESTARI

3A6-015（001）

Address: 印度尼西亚 Indonesia Banten-Tangerang-Jl. Raya Mauk KM 7 Kawasan Industri Mekar Jaya No.72
Tel: (+62) 21 59373306
Email: ecorplast@gmail.com
Web: www.ecoramahlestari.com

PT.ECO RAMAH LESTARI is a plastic processing company located in Tangerang. The products produced are recycled plastic seeds and plastic mills with materials consisting of LDPE, LLDPE, HDPE, PP, etc. which are categorized in several grades. Our production system is using the WASHINGLINE process system, which is perfect washing to keep the quality and color of the plastic stable without any dirt.

INDONESIA BIOFUELS PRODUCER ASSOCIATION

3A6-015（002）

Address: 印度尼西亚 INDONESIA-JAKARTA-MULTIVISION TOWER 11 FLOOR JALAN KUNINGAN MULIA 9B Indonesia DKI JAKARTA-KUNINGAN-MULTIVISION TOWER 11 FLOOR JALAN KUNINGAN MULIA 9B
Tel: +622129380882
Email: office@aprobi.or.id
Web: www.aprobi.or.id

Associating business entities in the biofuels industry, establish on 15 Dec 2006.Unifying all the business sectors in the biofuels industry in Indonesia to become the power of economic to increase the prosperity of the community and The nation.Being a partner to the Government in order to develop the policies for competitiveness improvement in both national & international markets.

Mikron SA Agno

3A7-001

Address: 瑞士 Switzerland Ticino-Lugano-Via Ginnasio17, CH-6982 Agno,
Tel: 021-6445 0566
Email: 15901637059@163.com
Web: www.mikron.com

瑞士米克朗公司是世界最顶级的组合机床生产厂家，适用行业广泛，包括：
1. 汽车零部件如油泵油嘴、动力转向器、ABS制动系统等；
2. 光纤连接件，电接插件；家用空调零件等；
3. 液压气动阀件；乐器零件等；手表零件；
4. 精密金属零件.
5. 5G 通信零件，5G基站零件.
6. 电动汽车金属部件.
7. 球珠书写笔头；等等.

大隈株式会社 / OKUMA CORPORATION

3B1-001

Address: 日本 爱知县-丹羽郡-大口町 Japan AICHI-NIWA-GUN-OGUCHI-CHO
Tel: 021-31373100-144
Email: yg-xu@okuma-sh.com.cn
Web: www.okuma-sh.com.cn

大隈株式会社（OKUMA）是一家生产车床、日本机床、数控车床、复合车铣加工中心、立式加工中心、卧式加工中心、复合加工机、磨床、以及数控装置、外围设备等的综合型机床制造商。为照相机镜头、智能手机等模具，汽车、医疗设备及飞机、船舶、风力和太阳能发电等众多行业领域提供产品和服务。
OKUMA Co., Ltd. (OKUMA) is a comprehensive machine tool for CNC lathes, multitasking machines, machining centers, grinders,CNC controls, FA products and peripheral equipment. Products and services for molds such as camera lenses and smartphones, automotive, medical equipment and aircraft, marine, wind and solar power generation.

Leifeld Metal Spinning AG

3B1-002

Address: 德国 Germany North Rhine-Westphalia-Ahlen-Feldstrasse 2-20
Tel: 021-50189728-3103
Email: y.huang@leifeld-ms.cn
Web: www.leifeldms.com

莱菲尔德是专业研发用于无屑金属成型的旋压机。总部位于德国，并在美国，中国，俄罗斯设有分部。我们的核心产业包括汽车，航空航天，能源和工业应用领域。莱菲尔德公司已拥有将近130年的历史，是全球首家开始研发无屑金属旋压的企业，也是无屑金属旋压领域的市场领跑者。莱菲尔德已经申请超过140项技术专利，可以提供各种自动化的解决方案，服务涵盖生产研发，技术支持，备件服务，咨询指导服务和现有机器改造的培训指导。

Leifeld Metal Spinning AG develops and produces machines for chipless metal forming. More than 200 employees work at our locations in Germany, USA, China and Russia. Our core sectors are automotive, aerospace, energy and industrial application. During more than 125 years, we have produced more than 6125 machines and delivered to 60 countries. By now Leifeld has applied 140 inventions for patents.

昇大企业有限公司 / SHEN TA CO., LTD.

3B1-005

Address: 台湾地区-台中市-北屯区东山路一段367号 Taiwan Taiwan-Taichung-No. 367, Sec. 1, Tong San Rd., Pei Tung Dist.,
Tel: 04-22393866
886-4-22393866
Email: upward@ms57.hinet.net
upward@ms57.hient.net
Web: www.upward.com.tw

昇大公司于1968年成立。我们在生产和销售专业工具上超过40年经验。昇大已经一贯在发展新产品过程中投资大量资本、努力和时间，例如 :套筒组套、板手、起子组...等系列。我们也已经在全世界获得各式各样专利。我们R&D部门持续对产品进行研究，是为符合市场趋势及建立新系列产品。我们对用高质量的工具和服务满足我们的客户感到自豪。虽然如此，我们将还会不断继续为我们的产品寻求更好的方法以提高更高的品质与标准。

SHEN TA was established in 1968, have over 40 years of experience in manufacture and marketing professional tools. We has consistently invested a large of capital & time in developing new products, such as Socket Wrench & Bits Set. We have also gained various patents. Our R&D department never stops research & create new product with innovatory functions & appearances to meet the market trend.

香港中大实业有限公司 / CHEMTAX INDUSTRIAL CO., LTD

3B1-008

Address: 香港地区 新界-葵涌-大连排道42-46号 贵盛工业大厦2期8楼G室 Hong Kong N.T.-Kwai Chung-Flat G,8/F., Phase 2, Kwai Shing Industrial Building, 42-46 Tai Lin Pai Road
Tel: 22799326
852-22799326
Email: connie.chan@chemtax.com
Web: www.chemtax.com

香港中大实业有限公司，事业主轴为欧洲多国高精密科技之纺织机械代理,五十年来在国际纺织产业中，藉由优质纺织机械设备,提供亚洲、大中华区的针织、梭织、毛纺到染整行业更多元与弹性的选择，进而共同携手创造全球纺织事业的佳绩,受到业界广泛赞誉。

Our main business of which is the textile machinery agent of European high-precision technology. In the past 50 years and ongoing, we have been providing multiple & flexibility choices of textile machinery with technologies support including knitting, weaving, wool spinning to dyeing and finishing industries in Asia and Greater China.

英属开曼群岛商亚德客国际股份有限公司 / AIRTAC INTERNATIONAL GROUP TAIWAN BRANCH (CAYMAN)

3B1-003

Address: 台湾地区 台南市-新市區看西路28號 Taiwan Taiwan (R.O.C) -Tainan City 74148-No.28, Kanxi Rd., Sinshih Dist.,
Tel: 0574-88685106
0574-88685106
Email: wangliuya@airtac.com
Web: www.airtac.com/
index.aspxglobal.airtac.com/index.aspx

英属开曼群岛商亚德客国际股份有限公司總部位於台北,1988年創立於台湾地区,系全球知名專業氣動器材供應商/生產商;主要生產氣動執行、控制、處理元件及名類輔助元件等,產品廣泛運用於汽車、機械制造、冶金、電子技術,環保處理、輕工紡織、陶瓷、醫療器械、食品包裝等自動化工業領域。

AirTAC International Group with its headquarter located in Taiwan and established in Taiwan in 1988, is a well-known supplier/manufacture of pneumatic equipments in the world market. AirTAC is specialized in producing actuators, control components,air preparation products, and accessories.

三久股份有限公司 / Suncue Company, Ltd.

3B1-006

Address: 台湾地区 台中市-雾峰区民生路396号 Taiwan Taiwan-Taichung-NO.396,Minsheng Rd.,Wufeng Dist.,
Tel: +886-04-2339-7171
+886-4-2339-7171
Email: sales@suncue.com
Web: www.suncue.com

三久公司于1966年成功开发台湾地区第一台干燥机，50多年来，不断的研发创新干燥技术，外销世界50多国。采职业用设计，机台坚固耐用，操作简单，管理轻松。利用废弃的稻壳、木材下脚、玉米穗轴等再生资源，省钱又环保。三久干燥机可采用生物质能源、燃油、天然气、蒸气等不同热源，满足客户各种干燥需求，协助农民以低干燥成本，烘出高质量、高单价的谷物，增加农民收入，造福全国人民。

Suncue was established in 1966, and Suncue has been continuously inventing pioneered drying technology over past 50 years.Pursuing lowest drying cost, producing highest quality grain, providing greatest benefit to farmers. Professional use design, high durability, simple operation, easy management.Using renewable energy such as paddy husk, pressed straw bricks, corn cobs, coconut shell, wood ch

台湾丽驰科技股份有限公司 / LITZ HITECH CORP.

3B1-009

Address: 台湾地区 台中市大甲区幼师工业区幼九路18号 Taiwan NO.18 YU 9 Rd.,Yu Shin Ind.Park,Tachia Dist,Taichung City,Taiwan
Tel: +886-4-26815711
886-4-26815711
Email: sales@litzhitech.com
Web: www.litzhitech.com

仂运工业有限公司 / LUE YUN INDUSTRY CO.,LTD

3B1-004

Address: 台湾地区 台中市神岡區大圳路42-3號 Taiwan No. 42-3, Dazun Rd., Shengang Dist., Taichung City 429,
Tel: +886-4-25628820
Email: wn80104@gmail.com
Web: www.lueyun.com.tw

生產高精度2片式離合齒及3片式離合齒,分割精度+/-1秒.調質油壓生爪

Production high precision 2 Piece Hirth Coupling and 3 Piece Coupling.Segmentation accuracy+/-1 sec.

ELECTRAIMPIANTI

3B1-007

Address: 意大利 维琴察省-科奈多维琴迪诺市-阿多内柏林路1号 Italy Cornedo Vic-Via Adone Perin,1-36073
Tel: 022-28571168
0086 22 28571168
Email: puyou@puyou.com.cn
Web:

Saurer AG

3B1-010

Address: 瑞士 Switzerland Wattwil-Bleikenstrasse 11
Tel: +86 21 22262498
Email: songhua.gu@saurer.com
Web: www.saurer.com

卓郎集团是全球纺织行业的领先企业，专业从事纱线加工机械和部件的研制。卓郎纺纱解决方案板块为客户提供从棉包到纱线全流程的品质优异、技术先进以及客户定制化的自动化解决方案。卓郎技术板块则专业从事加捻、刺绣、工程以及聚合物领域解决方案的开发。

The Saurer Group is a leading globally operating technology group focusing on machinery and components for yarn processing. Saurer Spinning Solutions offers high-quality, technologically advanced and customer-specific automation solutions for processing staple fibre from bale to yarn. Saurer Technologies specialises in twisting and embroidery as well as engineered and polymer solutions.

斗山机床 / Doosan Machine Tools

3B2-001

Address: 韩国 ROK(Republic of Korea) Seoul-Seoul-22F,T Tower ,30,sowol-ro 2-gil,Jung-gu
Tel: 18501682143
Email: xiaofei1.wang@doosanmt.com
Web: www.doosanmachinetools.com

斗山机床(中国)有限公司于2003年7月1日投资成立，累计投资3,000万美元，员工550余名，年生产能力3000余台。工厂设在山东省烟台市,在北京、上海、广州、重庆、杭州等地区设有分公司，开拓市场并提供售后服务等。公司集设计、生产、销售、服务为一体，生产国内领先的高效率数控车床、数控加工中心、数控镗铣床、龙门加工中心以及线切割机等近百种型号。

Filtrec SPA

3B2-004

Address: 意大利 Italy 24060 TELGATE (Bergamo) ITALY
Tel: 021-36512282
Email: allen.weng@filtrec.cn
Web:

Since our inception in 1991,Filtrec has devoted its resources to developing and implementing a vast range of interchangeable filter elements.The strategic location of each Filtrec facility,around the globe, enables us to have a well organised distribution networ ensuring prompt outcomes for our clients in all locations.

GERIMA GmbH

3B2-005（003）

Address: 德国 Germany St. Wendel-D-66606-Weimarer straße12
Tel: +86-10-64391718
Email: liyun@ydhjd.com
Web: www.gerima.de/en

Germany, in addition to having the most complete series of portable beveling chamfering products, it is one of the world's most powerful leaders of the large edger! Dealing with traditional methods: fire, plasma, milling, planing, rolling shear and other difficult to process high strength steel, wear plate, super-stainless steel, in the military industry, mining, engineering machinery。

UWT GmbH

3B2-002

Address: 德国 Germany Bavaria-Betzigau-Westendstrasse 5 87488
Tel: +49 (0)83157123-137
Email: guoyan.zhang@uwt.de
Web: www.uwt.de

UWT GmbH is one of the world's leading manufacturers of measurement technology for the detection and monitoring of levels, limit levels in any kind of bulk materials, solids as well as in liquids, pastes and foam.

OMCA s.r.l.

3B2-005（001）

Address: 意大利 Italy Reggio Emilia-CAVRIAGO-42025 CORTE TEGGE
Tel: +86-10-64391718
Email: liyun@ydhjd.com
Web: www.omcasrl.it

Innovative invention of the world's first automatic milling beveling machine! Fill the deficiency of the rolling shear type in surface finish, in addition to positive and negative, u-shaped slope outlets, also can achieve 75-90 degrees within the scope of the infinite is adjustable, oblique potential implementation and processing, at the edge of the platform is widely used in nuclear power.

Miba Automation System Gos.m.b.H

3B2-005（004）

Address: 奥地利 Austria Laakirchen-4663-Dr.-Mitterbauer-Str. 3
Tel: +86-10-64391718
Email: liyun@ydhjd.com
Web: www.miba.com

MIBA,Austria it has been developing and manufacturing heavy-duty numerical control mobile machine for more than 60 years. In this field, it has the most powerful non-standard design ability and the most rich experience especially good at the high-precision on-site processing of large or ultra-large workpieces. It has been involved in various fields, mainly serving the industries of thermal power.

武迪公司 / WD-40 company

3B2-003

Address: 美国 United States of America California-San Diego-9715 Businesspark Ave
Tel: +86-021-62964040-117
Email: twiggyzhao@wd40.com
Web: www.wd40.com

WD-40公司是拥有许多知名品牌的全球消费品公司，成立于1953年，总部位于美国圣地亚哥。我们的产品遍布在工厂中、工具箱中、家庭中等等，在全球176个国家拥有许多忠实用户。WD-40品牌家喻户晓，WD-40®多用途产品被大众消费者所青睐，被广泛应用于军工、航天、汽车、船运、粉末冶金、采矿、电子电力、制药、家庭等许多领域，可谓“从太空到家庭，妙用无穷”。

WD-40 Company is a global marketing organization headquartered in San Diego California, where the original WD-40®Multi-Use Product was invented over 60 years ago. Above and beyond that legendary, signature blue and yellow can, instantly recognized worldwide, WD-40 Company encompasses a group of brands featuring a full range of high-performance products.

CEVISA FABRICACIONES, S.L.

3B2-005（002）

Address: 西班牙 Spain Álava-Vitoria-C/.Concejo, 8 (Poligono Industrial Betono)
Tel: +86-10-64391718
Email: liyun@ydhjd.com
Web: www.cevisa.es

CEVISA, more than 50 years ago, invented the world's first roller cutting automatic beveling machine, and realized the world-class breakthrough in cold machining groove forming technology. CEVISA has the world's most complete series of product lines and is constantly innovating, with the highest processing efficiency, and is the world's NO.1 in milling shear automatic groove technology field!

亚柏士气动工具股份有限公司 / AIRBOSS AIR TOOLS CO., LTD.

3B2-006

Address: 台湾地区 台中市-西屯区中科路1688号 Taiwan Taichung Clty-No. 1688, Zhongke Rd., Xitun Dist,
Tel: 886424511968
Email: airboss@twairboss.com
Web: www.twairboss.com/
webls-zh-tw/index.html

TAI TECH SRL / TAI TECH SRL

3B2-007

Address: 意大利 Italy MILAN -C
Tel: +39 0331899008
Email: angelo.bianchini@taitech.it
Web:

Zeller+Gmelin GmbH & Co. KG

3B2-008（003）

Address: 德国 Baden-Württemberg-73054 Eislingen/Fils-Schlossstraße 20 Germany Baden-Württemberg 德国-73054 Eislingen/Fils-Schlossstraße 20
Tel: +86-(0)512-8067 6985
Email: ryan.zhang@zeller-gmelin.com.cn
Web: www.zeller-gmelin.de

Zeller+Gmelin GmbH & Co. KG 是一家中型国际性的，在润滑油、包装的印刷油墨和化学品方面市场占据领先地位的生产制造商。我们高质量产品分为工业润滑剂、Divinol润滑剂和脱模剂、印刷油墨和化学品，都在国际市场上占据领先地位。
Zeller+Gmelin GmbH & Co. KG is an medium-sized, international, market leading manufacturer of lubricants, printing inks for packaging and chemicals.Our high-quality products of the divisions industrial lubricants, Divinol lubricants and release agents, printing inks and chemicals internationally take a leading position on the market.

Xypex Chemical Corporation

3B3-004

Address: 加拿大 Canada British Columbia-Richmond-13731 Mayfield Place
Tel: 604-273-5265
Email: patty@xypex.com
Web: xypex.com

For over 50 years, Xypex crystalline waterproofing technology has been serving concrete users in over 90 countries. We will be joining CIIE for the second time with increased space.

Gebr. HELLER Maschinenfabrik GmbH

3B2-008（001）

Address: 德国 Germany Baden-Württemberg-Nürtingen-Gebrüder-Heller-Str. 15
Tel: 0086-519-85859909
Email: narendra.yadav@heller.biz
Web: www.heller.biz

创建于一八九四年的德国HELLER公司,是世界顶级的基础设备与工程技术供应公司，主要产品为卧式加工中心以及曲轴和凸轮轴车铣加工机床，应用于高切削率和高柔性的零部件加工，并以其百年丰富的经验和独特工艺方案设计，为全世界各大汽车品牌和工业巨头提供基础设备和工艺，目前除德国本土的两个制造工厂以外，还在英国、美国、巴西和中国建有制造基地。
Gebr. HELLER Maschinenfabrik GmbH was established in 1894. Today HELLER is one of the leading machine tools and engineering Technology Company. Its main products are Horizontal Machining Center & Crank-Shaft and Camshaft Machine, applied to the high cutting rates and flexibility of the parts processing.

利勃海尔国际股份公司 / Liebherr-International AG

3B3-001

Address: 德国 Bulle-Bulle, Switzerland Germany Bulle-Switzerland
Tel: 021-50461988
Email: elaine.lu@liebherr.com
Web: www.liebherr.com

For more than 70 years, Liebherr's range of products and services has been broad and sophisticated. Its design and technology is orientated around practical deployment scenarios throughout the world. Continually growing innovative strength and an uncompromising commitment to quality safeguard the highest level of benefit to the customer in all product areas.

Mitsui Chemicals Tohcello, Inc.

3B3-005

Address: 日本 Japan Tokyo-Chiyoda-ku-7, Kanda Mitoshiro-Cho
Tel: +81-3-6895-5711
Email: kosuke.sugimoto@mitsuichemicals.com
Web: www.mc-tohcello.co.jp/english

Mitsui Chemicals Tohcello has set its sights on becoming the most trusted global company in the field of materials processing, centered on film and sheet products for semiconductors, electronic parts, etc.

翰默亚太有限公司 / Haimer Asia Pacific Limited

3B2-008（002）

Address: 香港地区 新界葵涌大连排道21-33号,宏达工业中心9楼906室 Hong Kong Flat 6, 9/F., Vanta Industrial Centre, 21-33 Tai Lin Pai Road, Kwai Chung,N.T., HK
Tel: 021-67766318
Email: tao.chen@haimer.cn
Web: www.haimer.de

翰默HAIMER是德国一家中等规模的家族企业，成立于1977年，位于巴伐利亚州奥格斯堡市的伊根豪森镇。我们设计、生产和销售高精密的创新产品，服务于包括汽车、航空航天、能源、铁路和通用机械的金属切削行业。我们除了提供各种规格、接口和长度的刀柄产品、热缩机、动平衡机、3D量表和整硬刀具，现在还包括对刀仪。
HAIMER is a family run, medium sized company located in Igenhausen, Bavaria near Augsburg, Germany. We design, produce and sell innovative, high precision products for metal cutting as well as for other branches including automotive, aerospace, energy, rail and general machining.

WTO GmbH / WTO Werkzeug-Einrichtungen GmbH

3B3-002

Address: 德国 Germany 77797-Ohlsbach-Auf der oberen Au 45
Tel: 021-57899638-0
Email: lan.jing@wto-asia.com
Web: www.wto-tools.cn

高生产效率带来高投资回报WTO专业为车削中心,瑞士型车削中心及多轴车削中心生产制造高技术品质的精密刀座。我们技术卓越,品质超群的产品使客户获得更高的生产效率及更长的刀具使用寿命.我们的产品在全球的金属切削行业中得到广泛的应用,用来有效地生产制造高精密工件。
WTO designs and produces technological and qualitative top-quality precision toolholders and tooling systems for turning centers, Swiss Type and multi spindle turning centers.Our technological and qualitative superior products are known for achieving higher productivity and long tool life.Our precision toolholders are in use worldwide in the metal cutting industry.

WFL Millturn Technologies GmbH & Co. KG

3B3-007

Address: 奥地利 Austria Upper Austria-Linz-Wahringerstraße
Tel: +86 10 84 54 96 31
Email: office@wfl-china.com
Web: www.wfl-china.com

WFL车铣技术公司是全球唯一致力于生产多功能车铣复合加工中心的设备制造商。如今，大多数高科技公司都在使用WFL车铣复合加工中心设备对精密、要求极高的复杂零件进行加工。车铣复合加工中心模块化设计以及客户化的专用方案完美的契合了客户所需。
WFL is the only manufacturer worldwide that concentrates exclusively on the production of multifunctional complete machining centres. In many high tech companies today, the trade name MILLTURN stands for the central machine tool for the production of complex components with the highest precision.

蔡司集团 / ZEISS Group

3B3-008

Address: 德国 图林根州-奥本科亨 Germany Oberkochen Oberkochen Germany
Tel: 021-20821445
Email: jingyang.chen@zeiss.com
Web: www.zeiss.com

蔡司是全球光学和光电领域的技术先锋。在2017/18财年，蔡司集团的全年营收超过58亿欧元，覆盖工业质量与研究、医疗技术、光学消费品市场、半导体制造技术四大业务部门。
蔡司致力于为客户开发、生产和行销前沿创新的工业测量及质保解决方案，针对生物及材料科学领域的显微镜解决方案，以及应用于眼科及显微外科诊疗的医疗技术解决方案。蔡司也是全球光刻技术的行业标杆，其技术被芯片行业应用于半导体元件的制造。除此之外，蔡司品牌的眼镜镜片、相机镜头及望远镜等创新产品也适销全球。
凭借着迎合数字化、医疗保健及智能制造等未来发展趋势的产品组合，以及强大的品牌，蔡司正在塑造光学和光电及更多领域的未来。
ZEISS is an internationally optics and optoelectronics technology enterprise. In fiscal year 2017/18, the ZEISS Group generated annual revenue totaling more than 5.8 million euros in four segments: Industrial Quality & Research, Medical Technology, Consumer Markets and Semiconductor Manufacturing Technology.

林德气体（香港）有限公司 / Linde Gas (H.K.) Limited

3B4-003

Address: 香港地区 HongKong China 12 CHUN YAT STREET TSEUNG KWAN O INDUSTRIAL ESTATE TESUNG KWAN O KL
Tel: 021-6105 9888
Email: li-sha.zhu@linde.com
Web: www.linde.com.cn

林德公司是全球领先的工业气体和工程公司，在全球拥有约8万名员工，为百余个国家的客户提供产品和服务。公司致力为客户提供创新和可持续性的解决方案，并为所有利益相关方创造长远价值。
Linde is a leading industrial gases and engineering company. The company employs approximately 80,000 people globally and serves customers in more than 100 countries worldwide. Linde delivers innovative and sustainable solutions to its customers and creates long-term value for all stakeholders.

EMAG / EMAG GmbH & CO. KG

3B5-003

Address: 德国 Germany Stuttgart-Salach-Austrasse 24
Tel: 0512-53676065
Email: hwang@emag.com
Web: www.emag.com

埃马克集团总部设在德国萨拉赫市，传统悠久，机床制造经验丰富。其工艺技术全面而完善，能为用户提供加工盘类件、轴类件和箱体类零件的机床和生产系统。不管是车床，还是磨床、滚齿机、激光焊接机、热套装配设备、电化学设备或是感应加热设备—埃马克集团几乎能为所有的应用提供最佳的解决方案。
EMAG Group is a company steeped in tradition with global headquarters in Salach, Germany, offers the machine tools and complete manufacturing systems for chucked parts, shaft parts as well as the prismatic components. EMAG is able to provide the best solution for almost all applications.

株式会社天田控股集团 / AMADA HOLDINGS CO.,LTD

3B4-001

Address: 日本 神奈川县-伊势原市-石田200番地 Japan Kanagawa-Isehara-shi-200,Ishida
Tel: 021-59852222
021-59852222-8012
Email: shidy@amada.com.cn
Web: www.amada.com.cn

AMADA集团由91家子公司、关联公司构成。其主要业务内容是金属加工机械、模具的制造、销售、租赁、修理、维护、点检以及检查等。主要经营以钣金机械、切削与钢结构、磨床、压力机及精密焊接这五大业务为中心的加工机械。除此之外，还提供控制这些加工机械的软件及周边设备、模具乃至维护等各种解决方案服务。作为金属加工机械的综合制造商，AMADA一边站在客户的视角思考客户最需要的是什么，一边为产品制造
The Amada Group comprises about 91 companies. Their main businesses are the manufacture, sale, lease, repair, maintenance, check, and inspection of metalworking machines and equipment.

YAMAZAKI MAZAK CORPORATION

3B5-001

Address: 日本 Japan Niwa-gun-Aichi-Pref.-1-131 Takeda，Oguchi，Niwa-gun，Aichi-Pref.
Tel: 021-54832688-2712
Email: yuan_le@mazak.com.cn
Web: www.mazak.com.cn

MAZAK now has 10 production bases and 83 support bases in 26 countries with more than 8400 employees. All of these make an important contribution to the development of manufacturing worldwide.Mazak came to China in 1998, now has a comprehensive customer support network made up of one parts centre, two factories, three technology centres and seven sales regions covering 21 cities across China.

美国哈斯自动化公司 / Haas Automation, Inc.

3B5-004

Address: 美国 United States of America California-Oxnard-2800 Sturgis Road, Oxnard, CA93030, USA
Tel: 021-38616640
Email: lwayne@haascnc.com
Web: www.haascnc.com

美国哈斯自动化公司是美国的机床生产商，主要生产一系列的数控卧式、立式加工中心、数控车床及转台。本公司的宗旨是以最合理的价格提供用户精确,耐用,多功能的机床及转台,并紧跟着最好的服务。
Haas Automation, Inc. is machine tools builder in the United States, which manufactures a full line of CNC vertical and horizontal machine centers, CNC lathes, rotary tables and 5C indexers. Our goal is to supply the high accuracy, quality-assured and durability machines with affordable price, as well as the best service to our customers.

德国雄克公司 / SCHUNK GmbH & Co. KG

3B4-002

Address: 德国 Lauffen/Neckar -Bahnhofstr. 106-134, D-74348 Lauffen/Neckar Germany Lauffen/Neckar -Bahnhofstr. 106-134, D-74348
Tel: 0086-21-54420007
Email: info@cn.schunk.com
Web: www.schunk.com

雄克是一个来自德国的家族企业，亦是一家业务遍及全球的跨国公司。作为抓取系统与夹持技术的领先供应商之一，雄克可提供11000种标准部件，可提供2500款标准机械手。整个雄克抓取系统共由4000多种自动化模块组成。雄克的服务的目标行业包括机械工程、机器人、自动化装配及搬运、所有知名的汽车生产商及他们的零部件供应商。
SCHUNK GmbH & Co. KG of Lauffen/Neckar is a German family-owned company and global player all in one. With 11,000 standard components SCHUNK offers the world's largest assortment of clamping technology and gripping systems, and with 2,500 SCHUNK grippers the largest product range of standard grippers. The complete program of gripping systems comprises more than 4,000 components.

德国通快 / TRUMPF GMBH+CO.KG

3B5-002

Address: 德国 Germany Ditzingen -Johann-Maus-Str. 2
Tel: 0512-53677138
Email: else.chen@trumpf.com
Web: www.trumpf.cn

通快集团是全球领先的制造型公司之一，致力于为机床、激光和电源领域提供制造解决方案。拥有约13500名员工，2017/18财年总销售额达36亿欧元。集团旗下拥有三个业务部门：机床/电动工具、激光技术和电源技术。集团核心业务为用于柔性钣金加工的机床。在工业用激光器和激光系统领域，公司是全球市场的技术领导者。
The high-technology company TRUMPF offers production solutions in the machine tool and laser sectors. It is driving digital connectivity in manufacturing industry through consulting, platform and software offers. In 2017/18, the TRUMPF Group – which has about13,500 employees – achieved sales of 3.6 billion euros.

三菱重工业株式会社 / MITSUBISHI HEAVY INDUSTRIES, LTD

3B6-001

Address: 日本 Japan Tokyo-Chiyoda-ku-Marunouchi-Nijubashi Bldg., 2-3 Marunouchi 3-Chome
Tel: 010-65124321
Email: qi_zhang@mhic.mhi.co.jp
Web: www.mhi.com

创业于1884年的三菱重工一直以贡献社会为己任，致力于技术的研发和全球课题的解决，是一家在航空航天、能源供应、工业生产、机械加工、物流运输、制冷供热等众多领域拥有500余种产品的世界500强企业。作为综合基础设施建造商，我们为实现“可持续发展社会”而提供着可靠技术的保障及性能优越的产品。
Mitsubishi Heavy Industries, Ltd., founded in 1884, continues to contribute to the society by devoting ourselves to the research and development of technology and the resolution to various global issues. We offer more than 500 products that are widely used in various industries. As always, we proudly provide reliable technical support and superior products to move the world forward.

ALLNEX

3B6-002

Address: 德国 Germany Frankfurt am Main-Frankfurt am Main-The Squaire 13, Am Flughafen 60549 Frankfurt am Main
Tel: 021-64048011
Email: lina.shi@allnex.com
Web: www.allnex.com

allnex is a leading producer of industrial coating resins and additives for architectural, industrial, protective, automotive and special purpose coatings and inks.We are recognized as a specialty chemicals pioneer and known for our professionalism and for offering the broadest portfolio of high quality, innovative liquid resins and additives, radiation cured and powder coating resins, and cros

易格斯拖链轴承仓储贸易有限公司 / igus Energychain-Systems and Bearings and Warehousing and Trade Co., Ltd

3B6-003

Address: 德国 Germany Spicher Str. 1a, 51147 Köln
Tel: 021-51303100
Email: awang@igus.net
Web: www.igus.com.cn

易格斯(igus)公司成立于1964年,总部位于德国科隆,在世界各国或地区都设有分支机构。易格斯(上海)是德国易格斯独资子公司,负责中国所有相关业务。易格斯成立至今一直致力于工程塑料产品的开发和研究。经过50多年的不断努力,易格斯在拖链、高柔性电缆和塑料轴承领域处于世界领先水平。

igus starts business in 1964 with headquarters located in Cologne, Germany. After tens of years' development, igus have set up subsidiaries the world over. igus (Shanghai), WOFE of igus Germany, is in charge of all igus relevant business in mainland China.

(株)杜科 / Dooch Co.,Ltd.

3B6-004

Address: 韩国 韩国京畿道华城市长安面花谷路332号 ROK(Republic of Korea) (sagk-ri)332 Hwagok-ro,Jangan-myeon,Hwaseong-si Gyeonggi-do,Korea
Tel: +82-31-831-1200
Email: soochan@doochpump.com
Web: www.doochpump.com/kor

杜科总部位于韩国,成立于1996年,是一家集生产与研发水泵及变频给水系统的高新技术企业,是全球最早把数字集成全变频控制技术应用于变频给水设备上的企业之一。杜科始终坚持"安全可靠、节能环保、便捷人性化"的产品研发理念,用我们先进的技术和优良品质,服务全球市场。

Headquartered in Korea and was established in 1996, Dooch Company is a high-tech enterprise engaging in production and R&D of water pump and drive, and is the pioneer of digital integrated full frequency drive technology. Dooch always keep "Safe & Reliable, Energy-efficient, Convenient &User friendly" as product development concept, to serve the global market's customers with excellent quality.

斯棱曼激光科技集团 / SLM Solutions Group AG

3B6-005

Address: 德国 Schleswig-Holstein-Lübeck-Estlandring 4 23560 Lübeck Germany Germany Schleswig-Holstein-Luebeck-Estlandring 4 23560 Lübeck Germany
Tel: 13122877170
Email: Echo.Wang@slm-solutions.com
Web: www.slm-solutions.com

As the world leading metal additive integrated solutions provider, SLM Solutions' robust metal additive manufacturing systems optimize fast, reliable and cost-efficient part production. With multi-laser options, bi-directional recoating and closed-loop powder handling, SLM® machines achieve best-in-class safety and increased build speeds for complex, completely dense metal parts

CEA

3B6-006(001)

Address: 法国 France Gif-sur-Yvette-CEA Bâtiment Siège
Tel: +86 10 8531 2438
Email: yvane.meriadec@diplomatie.gouv.fr
Web:

The CEA is a key player in research, development and innovation to support development of innovative technologies for defense and security, for energy transition in particular for low carbon energies (nuclear and renewable energies), for the numeric and digital transition and for the medical application.

Electricité de France

3B6-006(002)

Address: 法国 France Paris-Paris-22-30 Avenue de Wagram
Tel: +86 10 5651 1451
Email: houzhe.li@edf.fr
Web: www.edf.fr

EDF Group is a leading player in the European energy market and the largest nuclear operator in the world. As an integrated electricity company with more than 70 years of power development experiences, EDF has comprehensive world-class industrial competitiveness in nuclear power, thermal power, hydropower and new energy power generation.

法马通 / Framatome

3B6-006(003)

Address: 法国 France Ile de France-Courbevoie-Tour Areva, 1 Place Jean Millier
Tel: 010 8531 6329 / 1085316329
Email: ying.koem.ext@framatome.com
Web: framatome.com

法马通是全球核能市场的佼佼者,因其为全球核反应堆的设计、建造、检修提供创新的解决方案和增值技术而获得认可。法马通从事核电厂主设备、燃料和仪控的设计、制造和安装,提供全方位的服务。通过全球14000名员工,法马通一直运用其专业技术帮助客户提升核电站的安全性和运行性能,实现客户的经济目标和社会目标。法国电力公司,三菱重工和艾西斯腾分别持有法马通75.5%, 19.5%和5%的

Framatome is a major international actor in the nuclear energy market and recognized for its innovative solutions and value-added technologies for designing, building, maintaining and advancing the global nuclear fleet.

Orano Group

3B6-006(004)

Address: 法国 France Ile de France-Paris-Franch
Tel: 010-85316331
Email: jinting.ji@orano.group
Web: www.orano.group

Orano transforms nuclear materials so that they can be used to support the development of society, first and foremost in the field of energy. The group offers products and services with high added value throughout the entire nuclear fuel cycle, from raw materials to waste treatment. Its activities, from mining to dismantling,as well as in conversion, enrichment, recycling, logistics and engineeri

瀚柏格夹具系统技术有限公司 / HAINBUCH GMBH SPANNENDE TECHNIK

3B6-007

Address: 德国 Germany Baden-Wuerttemberg-Marbach-Erdmannhäuser Strasse 57
Tel: 021-20916384/85
Email: sales@hainbuch.cn
Web: www.hainbuch.com

HAINBUCH瀚柏格夹具是全球领先的夹具设计及制造商,是已有60多年的传承的家族企业,其总部位于德国。目前我们在不仅全球有12个子公司,共有850多位员工,同时在50个不同国家拥有销售代理商及伙伴。HAINBUCH为全球客户所提供的不只是简单的夹具产品,而且是六十多年累积的夹具解决方案。我们的产品被大量运用在世界领先的机床设备制造商,也广泛服务于所有德国汽车制造商。

HAINBUCH has been designing and manufacturing fine workholding for more than 60 years. We are a family owned company with its headquarters in Germany. At the moment we employ approximately 850 people in 12 subsidiaries around the globe and have sales partners in 50 different countries. Our products are technically amazing, lead to astonishing results and revolutionize production processes.

号恩 / Paul Horn GmbH

3B6-008

Address: 德国 Germany D-72072 Tübingen
Tel: 021-52833505
Email: vivi.qian@phorn.cn
Web: wwwphorn.cn

号恩(上海)国际贸易有限公司----卓越于技术Paul Horn GmbH由Paul Horn先生创建于1969年,专注于硬质合金刀具的设计和生产,特别在槽加工领域号恩(上海)国际贸易有限公司是德国Paul Horn GmbH在中国的独资子公司现在我们在德国以至整个欧洲的汽车,航空航天,工程机械,液压,能源行业都有很高的市场份额和客户赞誉度。特别在非标刀具领域,更加是Horn公司的强项。

U-FLO PUMPS S.R.L

3B7-002

Address: 意大利 Italy Italy-20090 Pieve Emanuele(MI)-Via Piemonte 34
Tel: 18751929376
Email: zhuchenming@u-flo.cn
Web: www.u-flo.it

U-FLO PUMPS S.R.L is a global water pump and water system manufacturing and sales company headquartered in Washington, DC. Established a global R&D center in the United States, and distributed two manufacturing plants in Italy to manufacture and produce pumps and submersible motors. It has been more than 60 years old.

浦塔环保科技有限公司 / Portafill International Ltd

3C1-001

Address: 英国 United Kingdom County Tyrone-Dungannon-Dungannon Business Park, Killyliss Road
Tel: +86-21-6478 5886
Email: lingnan.hua@potaltd.com
Web: www.potaltd.com

浦塔环保科技有限公司 (POTA) 源于英国物料处理产业聚群–北爱尔兰。POTA公司与多家国内外公司及科研机构合作,集成开发了极具代表性的抑尘与移动式固废处理技术与专业设备。作为国家高新企业,POTA结合国情为工业粉尘、固废处理、工程&矿山等多领域提供专业的整体解决方案。

Portafill International Ltd are a world leading designer, developer and supplier of a range of cost effective, innovative and highly mobile screens, crushers, trommels, wash systems and conveyors.The company's products have been deployed in a variety of testing applications including: quarries; sand and gravel pits; landfill sites; Gabion stone; waste management sites and topsoil.

卡特彼勒公司 / Caterpillar Inc.

3B6-009

Address: 美国 United States of America Illinois-Peoria-501 Southwest Jefferson Avenue,
Tel: 18616569718
Email: lan_lan@cat.com
Web:

九十多年来,卡特彼勒公司不懈努力,促使可持续进步成为可能,并在全球各大洲积极推动改变。2018年,卡特彼勒全球销售及收入总额为547.22亿美元,是建筑工程机械、矿用设备、柴油和天然气发动机、工业用燃气轮机以及电传动内燃机车领域的全球卓越企业。公司运营主要涉及三大业务板块:基础建设、资源行业、能源和交通,并通过金融产品业务板块提供融资及相关服务。卡特彼勒已19次被列入道琼斯可持续发展指数。

For 90 years, Caterpillar Inc. has been making sustainable progress possible and driving positive change on every continent. With 2018 sales and revenues of $54.722 billion, Caterpillar is the world's leading manufacturer of construction and mining equipment, diesel and natural gas engines, industrial gas turbines and diesel-electric locomotives.

科尼集团 / Konecranes Pte Ltd.

3B7-003

Address: 新加坡 Singapore 8 Admiralty Street #06-11 Admirax, Singapore 757438
Tel: 021-26061086
Email: sean.yan@konecranes.com
Web: www.konecranes.com

科尼集团是技术先进的起重机制造商和起重维修服务提供商,我们的业务涉及一般制造业及加工业、船舶、港口和码头等多个领域。科尼集团提供的起重解决方案不仅能提高生产效率,同时为各种品牌的起重机提供服务。科尼集团的业务已经遍布全球50个国家,在世界范围内设立了600个服务网点,全球雇员16,100名。科尼集团是纳斯达克赫尔辛基证券交易所的上市公司(股票代码:KCR)。

Konecranes is a world-leading group of Lifting Businesses™, serving a broad range of customers, including manufacturing and process industries, shipyards, ports and terminals. Konecranes provides productivity-enhancing lifting solutions as well as services for lifting equipment of all makes. The Group has 16,100 employees at 600 locations in 50 countries, and listed on the Nasdaq Helsinki.

Public Procurement Service

3C1-002(001)

Address: 韩国 ROK(Republic of Korea) Daejeon-Seo-gu-Government Complex Daejeon Building 3, 189, Cheongsa-ro
Tel: +82-42-724-7590
Email: paulsong@korea.kr
Web: www.pps.go.kr/eng

Domestic and foreign procurement for public institutions Contracts for the government's major construction projects.Management and operation of KONEPS.

尼古拉斯克雷亚集团公司 / Nicolas Correa S.A.

3B7-001

Address: 西班牙 Spain Burgos-Alcalde Martin Cobos, 16-A 09007 Burgos, Spain
Tel: 021-61042950
Email: audrey@correachina.cn
Web: www.correachina.cn

自1947年成立以来,尼古拉斯•克雷亚集团公司一直致力于加工中心的生产和制造,持续改进生产技术,始终位居技术前沿,为客户打造可靠的创新型铣削解决方案。尼古拉斯•克雷亚集团公司1989年就在马德里证券交易所上市,成为证券交易市场上的唯一一家西班牙机床制造商,也是领先的欧洲大中型铣削解决方案制造商之一。

With over 800 bridge type machines and over 600 floor type machines installed all over the world, it is one of Europe's leading companies in the field of milling solutions designed to work in the most demanding production environments, such as the power generation, automotive, aerospace and railway industries.

Aston Martin Lagonda Limited

3B7-004

Address: 英国 United Kingdom Warwick CV35 0DB- Gaydon-Banbury Road
Tel: +86(0)21 80369036
Email: Guess.Zhang@astonmartin.com
Web: www.astonmartin.com

阿斯顿·马丁成立于1913年,是一个拥有卓越历史传承的标志性品牌,如今正迈入公司发展的第二个百年。凭借全新投资计划、新任首席执行官以及公司有史以来最强大的产品线,来自英国的奢华跑车品牌正全速驶向振奋人心的未来。公司总部位于沃里克郡盖顿,在这里的每一位阿斯顿·马丁的成员用精湛的技艺,极致的创意以及对品牌的无限热爱不断创造属于阿斯顿·马丁的一个又一个传奇。

Aston Martin Lagonda is a luxury automative company focused on the creation of exclusive cars and SUVs. The iconic Aston Martin brand fuses the latest technology, exceptional hand craftsmanship, and timeless design to produce models including the Vantage, DB11, and DBS superleggera. The Lagonda brand will relaunch in 2021 as the world's first luxury electric vehicle company.

Ecobiznet Inc.

3C1-002(002)

Address: 韩国 ROK(Republic of Korea) Gangwondo-Chuncheonsi-Bioplaza 4F, 56 Soyanggangro
Tel: +82-33-258-6406
Email: Jinju.song@ecobiznet.com
Web: www.ecobiznet.com

Based on the environmental and bioengineering technologies, Ecobiznet Inc. has been pursuing sustainable organic farming and clean environment and provided the organic farming programs related to the product group including microbial materials and functional substances, which have made eco-friendly, organic farming possible in the areas of agriculture, stock breeding, aquaculture and environment.

Daemyung esco co,.ltd

3C1-002(003)

Address: 韩国 ROK(Republic of Korea) Gyenrgi-do-suwon-si-401,21,ingye-ro,94beon-gil,paldal-gu
Tel: 82-31-898-5550
Email: parkinkyu@dmesco.com
Web: www.dmesco.com

Specialized manufacture of low-temperature and high-efficiency condensing waste heat recovery heat exchange system.When heat generation facilities (industrial boilers, incinerators, cogeneration, thermal power plants, etc.) are operated,the waste heat recovery heat exchange system is installed to recover the waste energy, and the energy saving system used for hot water supply, heating。

VisualNet Inc.

3C1-002(007)

Address: 韩国 ROK(Republic of Korea) Gyeonggi-do-Seong nam-si-Rm824, Corp. Support Hub, Daewang Pangyo-ro 815, Sugeong-gu
Tel: +82-31-5182-9078
Email: estherkim@visualnet.io
Web: www.visualnet.io

VisualNet develops and produces VisualTag® as the absolute solution for genuine product certification.

Dong Yang E&C Corp.

3C1-002(010)

Address: 韩国 ROK(Republic of Korea) Daegu-58, kumdan Gongdan-ro, Buk-gu
Tel: +82)53-382-5588
Email: tjddnjs737@naver.com
Web: www.dyz-in.co.kr

DongYangE&C is professional construction company. We are specialized in metal windows and door. Concretely, we are producing Curtain walls and Project window, Gallery Window. We want to cooperate with the Chinese company and china.

SINCON

3C1-002(004)

Address: 韩国 ROK(Republic of Korea) Busan-Sasang-gu-2F 60-10, Gwangjang-ro 56beon-gil
Tel: 82-10-9603-1305
Email: alfk1305@naver.com
Web: www.sy-survey.com

SINCON company is one of the largest laser-leveling companies in Korea.

Safe Queestle Co., Ltd.

3C1-002(008)

Address: 韩国 ROK(Republic of Korea) Gyeonggi-do-, Uiwang-si-7F Bando-plaza, 40, Gyewondaehak-ro
Tel: 82-31-422-4002
Email: queestle@hanmail.net
Web: www.queestle.com

Safequeestle was established in 2009 to prevent damage to lives and property caused by a house gas fire. It is a company that is improving vertically after continuous development. Queestle Smart Gascock produced by the company is of the highest quality among its Korean peer products, and was certified as a venture company in 2011 and as an innovative small business in 2013.

Dot Incorporation

3C1-002(011)

Address: 韩国 ROK(Republic of Korea) Seoul-Geumcheon-gu-2002, Ace Hiend Tower 7, Gasan-dong
Tel: +82 2 864 1113
Email: myberhm@dotincorp.com
Web: www.dotincorp.com

DOT Incorporation is one of the world's leading social impact companies which manufactures ingenious smart-devices with incredible technologies for visually impaired.

NEXUSTECH Co.,Ltd

3C1-002(005)

Address: 韩国 ROK(Republic of Korea) Gyeongsangbuk-do-Gumi-si-G-Star camp in Gyeongbuk Center for Creative Economy & Innovation, 350-27 Gumi-daero
Tel: +82-10-8310-9918
Email: alsldl991@naver.com
Web: www.nexustech.or.kr

Combination of 5G mobile communication service and Wi-Fi With steady growth of needs and rapid growth of MESH (telecommunication network) market, NEXUSTECH provides optimum network environment for cities, factories and farms suitable for 4th industrial revolution with the communication cost reduction. NX1700, as the first launched in Korea, supports Wave2 (1.7 Gbps) data processing.

PITCHCABLE INC.

3C1-002(009)

Address: 韩国 ROK(Republic of Korea) JEOLLABUK-DO-JEONJU-SI-212, 106, WONMANSEONG-RO, DEOKJIN-GU
Tel: +82-63-211-2967
Email: pitchcab@hanmail.net
Web: www.pitchcable.com

Pitch Cable Inc. is a professional company that researches, develops, produces and supplies electric/non-electric products using carbon fiber. In order to provide our customers with superior performance and high quality products, we are always doing our best to improve our products through continuous research and development.

CLEAN FILTEC CO., LTD.

3C1-002(012)

Address: 韩国 ROK(Republic of Korea) Gyeonggi-do-Namyangju-si-604-11, Byeollae-dong
Tel: 82-31-552-0123
Email: vkair@hanmail.net
Web: www.cfiltec.com

Clean Filtec established in 2012 has been operated the Air-Filter and I.A.Q SAFE ZONE as a major business.I.A.Q. SAFE ZONE business is the business of purifying indoor air by the Virus Keeper filter that protect from fine dust, carcinogenic hazardous gases, ozone, deleterious bacteria, and contagious viruses by installing on air-conditioner, windows, fan, air handling unit, etc.

3DS LAB / OTS co., ltd.

3C1-002(013)

Address: 韩国 Seoul-Daejeon-SG23, 6F, 602, Yeongdong-daero, Gangnam-gu ROK(Republic of Korea) Seoul-Daejeon-OTS Building, 13-6, Boksudongro 87-beongil, Seo-gu
Tel: +82-0507-1310-3171
82-42-586-1451
Email: finder7@naver.com ots1440@naver.com
Web: www.make3ds.co.kr
www.ots.co.kr

Recently, while CCTV cameras are used in diverse industrial fields and public instiutions (transport, electricity, waterworks, security and national defense) for warious purposes, there are maintenance issues for CCTV cameras installed at high levels. Although regular maintenance and inspection are required to prevent murky view from humidity, dust spider web and impuritie.

3DS LAB

3C1-002(016)

Address: 韩国 ROK(Republic of Korea) Seoul-SG23, 6F, 602, Yeongdong-daero, Gangnam-gu
Tel: +82-0507-1310-3171
Email: finder7@naver.com
Web: www.make3ds.co.kr

3DS LAB is Augmented Reality & Contents Service Company.Our Company has AR products for Smart mirror (Lemonview) & Smart Glass solution (LivePicker) and Smart Toy.They have interactive Contents with AR and Smart Contents.Also, we will provide them various area such as Beauty, Smartcity and so on.

Sonowiz Inc.

3C1-002(019)

Address: 韩国 Seoul-Seoul-304-ho, New Knowledge Industry Center, 484, Tongil-ro, Seodaemun-gu ROK(Republic of Korea) Seoul-304-ho, New Knowledge Industry Center, 484, Tongil-ro, Seodaemun-gu
Tel: +82-2-6748-5001
Email: master@sonowiz.com
Web: www.sonowiz.com

Located in Seoul, South Korea, Sonowiz Inc. was established in 2014.We are specialized in traffic safety accident prevention system and smart home safety and security solution based on digital voice signal processing technology and IR-UWB radar technology.
Acquired ICT Convergence Quality Certification

GLOBAL BRIDGE Co.,Ltd

3C1-002(014)

Address: 韩国 ROK(Republic of Korea) Icheonsi-A-1710,2107,30 Songdomirae-ro,Yeonsu-gu
Tel: +82.32.715.8337
Email: kimse777@globalbridge.co.kr
Web: www.globalbridge.co.kr

Binary CDMA video and data communication products with wireless security functions

SamrtCityGrid Co., Ltd.

3C1-002(017)

Address: 韩国 ROK(Republic of Korea) Incheon-Seo-gu-#D-207 Environment Venture Center, Environmental Industry Research Complex(E TechHive), 410 Jeongseojin-ro
Tel: +82-32-875-9731
Email: besthero7@smartcitygrid.kr
Web: smartcity.koreasme.com

SmartCityGrid Co., Ltd. is a research and development company that provides smart solutions and platforms in the environmental/energy sector based on IoT technology to respond to climate and environmental changes.

InSpace Co., Ltd.

3C1-002(020)

Address: 韩国 ROK(Republic of Korea) Daejeon-Yuseong-gu-#501, 96 Gajeongbuk- ro
Tel: +82-70-4914-0216
Email: baecksh@inspace.re.kr
Web: www.inspace.re.kr
www.inspace.co.kr

InSpace Co., Ltd. is a venture company established in 2012 by researchers from government-funded institutes and experts from ICT companies to keep up with the current trends of the convergence between Space Technology(ST) and Information Communication Technology(ICT).

Raytec Co., LTD.

3C1-002(015)

Address: 韩国 ROK(Republic of Korea) Gyeongsangbuk-do-Gumi-si-61, Daehak-ro venture 301
Tel: 82-1023228811
Email: raytec01@daum.net
Web: www.raytec.kr

Based on the T-ray image technology, we have launched the T-ray nondestructive inspection system for the first time in Korea, which enables us to detect foreign substances in food and pharmaceutical products and bubble cracks in resin-based parts.

BLUE N Inc.

3C1-002(018)

Address: 韩国 ROK(Republic of Korea) Jeonnam-Gangjin-gun-1-gil 1, Gangjinsandanro
Tel: +82-60-463-3883
Email: nanofuture@hanmail.net
Web: www.bluen.net

1. Company Introduce To keep the source of life "water" clean and green technologies and products of BLUE N Inc. are specific to this standard.Disassemble and remove certain pollutants in rivers, lakes, sewage and wastewater.We are also developing innovative technologies to sterilize harmful bacteria in the water by treating them with zero energy.

Polin Waterparks

3C1-003(001)

Address: 土耳其 Turkey Dilovası-Kocaeli-Gebkim OSB, Refik Baydur 6,41480, Dilovası, Kocaeli, Turkey
Tel: 0090 262 656 6467
Email: info@polin.com.tr
Web: www.polin.com.tr

Global market leader in design, engineering, manufacturing, and installation of waterparks, and water play attractions. Founded in 1976. Polin has completed 3,000 water park projects in 105 countries and is the biggest water slide supplier in Eurasia.

Mert Fleks Ltd. Co.

3C1-003（002）

Address: 土耳其 Turkey Istanbul-Istanbul-Imes Sanayi Sitesi D Blok 401 Sokak No:12 / Umraniye
Tel: +902163134308
Email: ozgur@mertflex.com
Web:

Mert Flex is a manufacturer of new design and technology solutions for various industries.

DURMAZLAR MAKINA SAN VE TIC AS

3C1-003（003）

Address: 土耳其 Turkey NILUFER-BURSA-OSB 75. YIL BULVARI NO:4
Tel: +90 224 219 18 28
Email: mduzgun@durmazlar.com.tr
Web: www.durmazlar.com.tr

Metal Sheet Processing Machines.

KASPA DI T CARET

3C1-003（004）

Address: 土耳其 Turkey stanbul-Ümraniye-Necip Fazıl Mahallesi, Sa dıç Sokak No:4
Tel: +90 216 527 15 27
Email: kkalaycioglu@kas.com.tr
Web: kas.com.tr

Kayalar Group was established in 1970 with the mission of being a manufacturer that offers the best quality products and services, with strong/ dynamic human resources, innovative products and without compromising customer satisfaction in products and services.

Istanbul Chemicals and Chemical Products Exporters' Association (IKMIB)

3C1-003（005）

Address: 土耳其 Turkey stanbul-Sanayi Caddesi Cobancesme Mevkii Dis Ticaret Kompleksi No:3 A Blok Yenibosna/ Bahcelievler
Tel: +902124540000
Email: seyma.inam@immib.org.tr
Web: www.ikmib.org.tr

Istanbul Chemicals and Chemical Products Exporters' Association (IKMIB) is a professional establishment which deals with all of the export activities of its members. The main aim of the Association is to increase the export volume of Turkish Chemicals and Chemical Products Sector. IKMIB bolsters its members in the national and international level via different activities.

Ata Technology Platforms

3C1-003（006）

Address: 土耳其 Turkey Istanbul-Be ikta - Gayrettepe mah. Emirhan Cad. Atakule :109, 34349 Be ikta / stanbul
Tel: +902123106565
Email: filizb@atp.com.tr
Web:

ANKARA METAL PRODUCTS EXPORTERS ASSOCIATION

3C1-003（007）

Address: 土耳其 TURKEY-ANKARA-CEYHUN ATUF KANSU CAD. Turkey TURKEY-ANKARA-CEYHUN ATUF KANSU CAD. NO 120
Tel: 00903124472740
Email: ozbilginz@oaib.org.tr
Web: www.mepex.org

Ankara Metal Products Exporters Association was established in 1993 and has more than 2.000 members. The Association was formed with the aim of increasing exports, enhancing professional solidarity, organizing the professional activities and relations of the exporters, finding solutions to their problems, and providing guidance.

意大利卡萨格兰地集团 / Casagrande S.p.A.

3C2-002

Address: 意大利 Italy Fontanafredda (PN)-Via A. Malignani 1，33074
Tel: 86-10-64150500
Email: wangxu@railstar.com.cn
Web: www.railstar.com.cn

意大利卡萨格兰地Casagrande集团始创于1963年，目前为全球最大的多功能钻机生产制造商，在多功能钻机领域占有全球85%以上的市场份额，并程逐年上涨趋势。针对特殊领域、特殊空间要求，意大利Casagrande集团勇于开拓、探索，以客户需要为导向，以科技创新为动力，不断推出全新产品。依托集团深厚的技术功底和科技创新实力，向用户提供更便捷、智能化的产品与服务，使客户效益最大化。

CASAGRANDE is approaching very rapidly 60 years of history. We are part of the foundation engineering world to which we have contributed throughout the years.From the choice of high tensile steel the use of quality components sourced from the major world-renowned manufacturers always having the ultimate objective of providing the best quality rig available in the market.

BLM Group

3C2-001

Address: 意大利 Italy CO-Cantu-Via Selvaregina 30
Tel: 02154461669
Email: sales@blmgroupchina.cn
Web: blmgroupchina

意大利BLM集团成立于1960年，是一家专业从事开发和制造管材、棒材及板类加工设备的大型企业，可提供从用于切割到加工可装配元件生产的设备。BLM GROUP develops and produces custom-designed solutions for processing tubes, bars and sheet, from cutting to machining ready-to-assemble parts.Our offer starts from customer's requirements analysis and studies alternative production solutions from single machines to integrated systems implementing automatic handling and on-line check.

Premier Polyfilm Ltd.

3C2-003（001）

Address: 印度 India 110048-New Delhi-305, Elite House 3rd Floor, 36 Community center, Zamroodpur, New Delhi-110048
Tel: +91 11 29246481
Email: premierpoly@premierpoly.com
Web: www.premierpoly.com www.polyfabs.com

We are a leading manufacturer/Exporter of Calendared, Cushioned, Coated PVC products and LVT from India.Our range includes PVC Flooring, PVC Sheeting, PVC Flexible Film, PVC Leather, PVC Geomembrane, High voltage Insulated Mats, Flooring Installation Accessories and LVT/Planks etc.We are ISO: 9001-2015 Company with 25 years' experience in producing above products as per ISI and EN standards.

EtchON Marks Control

3C2-003（002）

Address: 印度 India Maharashtra -Aurangabad -Sector A 71 Five Star MIDC Shendra
Tel: +91-7770010885 / +91-9422205163
Email: support@etchon.com
Web: www.etchon.com

We are a widely reckoned manufacturer and exporter of supreme quality Fiber Laser Machines, Electrolytic-Chemical Metal Etching Machine, Dot Pin Marking Machine and allied automation. Owing to their sturdy construction, high performance, low maintenance and other attributes, our range of product is highly appreciated and demanded by our esteem clients worldwide.

WEARRESIST TECHNOLOGIES PVT LTD

3C2-003（004）

Address: 印度 India Gujarat-Vadodara-421/422, GIDC, POR, RAMANGAMDI, VADODARA, GUJARAT-391243
Tel: +91-0265-2651548
Email: mktgsupport@wearresist.com
Web: www.wearresist.com

Leading wear & tear engineers started in 1996 by a group of technocrats having collective experience of more than three decades then in maintenance and repair activities of core sector industry like Cement, Power, Mining, Sugar, Paper, Steel, Infrastructure and oil drilling industry.

BLACK JACK INDIA LTD

3C2-003（005）

Address: 印度 India PUNJAB-JALANDHAR-C-4, FOCAL POINT
Tel: 00911244269766
Email: rajat@blackjacktools.com
Web: www.blackjacktools.com

An ISO 9001:2015 Certified, BSCI Audited & Socially Complaint Manufacturer & Exporter of Quality Hand Tools from India. Producer of TUV-GS certified Spanners & Vices meeting all International norms & quality standards - Products - SPANNERS, VICES, PLIERS, PINCERS, ADJUSTABLE WRENCHES, WRENCHES, HAMMERS, TOOL BAGS

CMD (Costruzioni Motori Diesel)

3C2-004

Address: 意大利 Italy Caserta-San Nicola La Strada-Via A. Pacinotti, 2
Tel: +39 0823/424055
Email: angela.ferraro@cmdengine.com
Web: www.cmdengine.com

C.M.D. Costruzioni Motori Diesel SpA is an Italian well-known company specialized in a full range of engineering services by providing design, prototyping and development processes through advanced and high-tech solutions. Its business diversification strategy is strongly implemented by 5 Business Units: Avio Engines, Marine Engines, Cast iron and aluminum Machining parts,CHP systems, Electronic.

Federazione ANIE

3C2-005

Address: 意大利 Italy Milan-Viale V. Lancetti 43
Tel: +39023264227
Email: internazionale@anie.it
Web: www.anie.it

Federazione ANIE, member of Confindustria, represents the Electrical Engineering and Electronic companies operating in Italy. With over 1,300 member companies, the ANIE system supplies technologies for public and private infrastructures in strategic markets such as energy, transport, industry and building.

泽尼特 / ZENIT ITALIA SRL

3C2-006

Address: 意大利 摩德纳-I-41018 圣萨切里奥-工业路11号 Italy Modena-I-41018 San Cesario sul Panaro-via dell' Industria, 11
Tel: 0512-62554978
Email: pji@zenit.com
Web: www.zenit.com

泽尼特(ZENIT)在20世纪50年代始建于意大利工业重镇摩德纳，拥有设计和制造电动潜污泵、污水提升装置以及水处理系统60年历史。产品应用涵盖民用、工业、建筑业、市政工程等多个领域。目前泽尼特集团在全球拥有多家分支机构，已成为全球领先的水泵研发和制造商之一。二十一世纪泽尼特进入中国，于2005年在苏州注册成立泽尼特泵业（苏州）有限公司，后更名为泽尼特泵业（中国）有限公司。

Zenit was established in the late '50s in Modena, Italy. As a major manufacturer of submersible electric pumps for domestic and industrial use for more than 60 years' experience in designing and manufacturing submersible electric pumps, lifting stations and water treatment systems, the applications of products cover a wide range of domestic use, industry, construction, municipal engineering, etc.

Megajoule Adria d.o.o.

3C2-007

Address: 克罗地亚 Croatia Zagreb-Zagreb-Kuzmine ka 3
Tel: +385981869025
Email: leo.jerkic@megajoule.pt
Web: www.megajoule.pt

Megajoule is consultancy company offering full scope of technical services for utility scale wind and solar projects. The company operates in more than 20 countries around the world, having offices in 8 countries. Our most notable services include wind and solar bankable resource assessments including site assessments, technical due diligence services, designing and owners enginee

AMPnet IO d.o.o.

3C2-008

Address: 克罗地亚 Croatia Zagreb-Savska 32
Tel:
Email: mislav@ampnet.io
Web: ampnet.io

AMPnet is a software deelopment company developing a solution for running energy communities.

Ministry of Education of the Republic of Belarus

3C2-011（001）

Address: 白俄罗斯 Belarus Minsk- 9 Sovetskaya Str.,
Tel: +375 17 2265159
Email: root@minedu.unibel.by
Web: www.edu.gov.by

Providing national education system of the Republic of Belarus. Developing a system of continuing education.Introduces new technologies, materials, equipment, developed by the universities.

Educational establishment «Belarusian State Technological University»

3C2-011 (002)

Address: 白俄罗斯 Belarus Minsk-13a-228-4 Sverdlova Str.
Tel: +375173273150
Email: inform@bstu.unibel.by
Web: www.bstu.unibel.by

BSTU is a higher educational establishment that conducts training of top-qualification specialists and scientific researches in the area of chemistry, biology, polymeric materials, ceramic, wood working, forest management.

Belarusian State University

3C2-011 (007)

Address: 白俄罗斯 Minsk-220030, Minsk, 4, Nezavisimosti ave. Belarus Minsk-220030, 4, Nezavisimosti ave.
Tel: +375172095793
Email: Shelamova@bsu.by
Web: www.bsu.by

BSU is the premier higher education institution in Belarus and offers a variety of educational programs at all levels of education: BA, MA, Post-Graduate and Post-Doctoral Education, Advanced Training, Retraining.BSU is also a major R&D and production complex involved in various fields on the cutting edge of technology. It includes 4 research institutes, 28 faculties and 4 unitary enterprises.

Educational establishment «Grodno State Y. Kupaly's University»

3C2-011 (010)

Address: 白俄罗斯 Belarus Grodno-Osheschko Str., 22,
Tel: +375 152 731901
Email: mail@grsu.by
Web: www.grsu.grodno.by

GRSU is a higher educational establishment that conducts training of top-qualification specialists along with scientific researches in the area Development of holographical, spectral, laser methods and equipment for research of phase mediums, plasmodynamic processes and complex molecules. Development of program and equipment means for information technologies. Creation and treatment of new alloys

SSPA "Scientific-Practical Materials Research Centre of NAS of Belarus"

3C2-011 (004)

Address: 白俄罗斯 Belarus Minsk-P. Brovki Str., 19, 220072
Tel: +375 17 284 15 14
Email: priemnaya@physics.by
Web: www.physics.by

The Center solves the following tasks: the creation of new magnetic, ferroelectric, semiconductor, metal, superconducting, superhard and optical materials in the form of crystals, ceramics, disordered systems, nanomaterials and nanostructures

Francisk Skorina Gomel State University

3C2-011 (008)

Address: 白俄罗斯 Belarus Gomel-Sovetskaya 104
Tel: +375232576357
Email: dkov75@mail.ru
Web: www.gsu.by

Education, science

NPO CENTER

3C2-011 (011)

Address: 白俄罗斯 Belarus Minsk-Sharangovich 19-304
Tel: +375172590357
Email: mail@npo-center.com
Web:

Educational establishment «Polotsk State University»

3C2-011 (006)

Address: 白俄罗斯 Belarus Novopolotsk-29 Blohina Str.,
Tel: +375 214 532383
Email: post@psu.by
Web: www.psu.by

PSU conducts training of top-qualification specialists and scientific researches in the area of mechanical engineering, geodesy, information processing technologies, radiotechnics, building materials.

白俄罗斯国立信息和无线电大学 / Belarusian State University of Informatics and Radioelectronics

3C2-011 (009)

Address: 白俄罗斯 明斯克市-B.布罗夫基街，6号 Belarus Minsk-P.Brovki Street, 6
Tel: 375172938939
Email: vrublevsky@bsuir.edu.by
Web: science.bsuir.by

研发部门1. 厘米和毫米波长范围的技术和设备 2. 无线电电子设备和系统电磁兼容性的技术发展和硬件-软件复合物 3. 数字图像处理 4. 信息技术 5. 信息防护 6. 新功能材料 7. 微电子、纳米技术 8. 旋转机械、建筑物和建筑振动测量和控制技术、多功能系统和便携式装置 9. 工业和医疗用超声波技术和设备 10. 等离子技术 11. 农机设备和铁路运输的远距离监控部件和系统

BSUIR is the only Belarusian university that is accredited as Research Organization by the State Committee for S&T of Belarus and National Academy of Sciences of Belarus. RESEARCH AREAS: 1.Radioelectronics (UHF, ENC, RFID, ultrasonic, etc.) 2.Microelectronics & Nanotechnology 3.Vibrodiagnostics 4.Plasma technology 5.IT & control systems 6.Data transmiting, processing, protecting, etc

STATE SCIENTIFIC INSTITUTION THE INSTITUTE OF METAL TECHNOLOGY

3C2-011 (012)

Address: 白俄罗斯 Belarus Mogilev-212030, Bialynitskaga-Biruli, 11
Tel: +375-222-640699
Email: info@itm.by
Web: itm.by

Development of high technologies, equipment and materials for foundry using secondary resources (chip waste from ferrous and non-ferrous metals and alloys, waste from galvanic production).

Educational establishment «Brest State Technical University»

3C2-011 (015)

Address: 白俄罗斯 Belarus Brest-267, Moskovskaya Str.
Tel: +375 162 429002
Email: innovation@brstu.by
Web: www.bstu.by

BSTU is a significant scientific and training center in the western region of the Republic of Belarus, conducts training of top-qualification specialists and scientific researches in the following fields: construction, architecture, electronics, machine engineering, economics and ecology. It represents its innovative technologies and developments at international exhibitions.

遠創(香港)有限公司 / YUAN CHUANG(H.K)CO.,LTD.

3C3-002

Address: 香港地区 香港九龍尖沙咀漆咸道南45-51號其士大廈3樓308室 Hong Kong HONGKONG-HONGKONG-Unit 308, 3/F, Chevalier House, Chatham Road South, Tsimshatsui, Kowloon, HongKong
Tel: 0760-86788044
Email: zs.pcd103@sansei.cn
Web: www.zssansei.cn

遠創(香港)有限公司,立足香港地区，有着丰富的注塑管理经验,从塑料产品设计、塑料模具设计到制作、量产，提供一条龙服务，实现高质量的管理，既兼顾成本和效率，又通过日式生产管理提供高品质、高技术的产品，满足顾客需求。经过二十多年来不断进取，不断创新，如今发展成为集全球进出口贸易，工业技术研究，生产等多元化现代化企业。

Yuan Chuang (HK) Co., Ltd base on in HK, with rich experience in injection mold management, we can provide one-stop services from plastic product design, plastic mold design & manufacturing, to mass production, achieve high-quality management, combining both cost and efficiency, and through the Japanese production management to provide high-quality, high-tech products to meet customer requirements

阳昕环保科技(香港)有限公司 / Sunshine Environmental Science and Technology(Hongkong)co.,Ltd

3C3-007

Address: 香港地区 HongKong China RM12M,20/F HO KING COMM CTR2-16 FAYUEN ST MONGKOK KL
Tel: 021-62686139 / 021-62686129
Email: yangyufei@sunshine-water.cn
Web:

Science and Technology Park of BNTU "Polytechnic"

3C2-011 (016)

Address: 白俄罗斯 Belarus Minsk-24 Ya. Kolasa Street, office 34/1, 220013
Tel: +375172355974
Email: post@park.bntu.by
Web: park.bntu.by/en

"Polytechnic" is the first and largest university technopark of Belarus. Our goal is to create and support new innovative enterprises and industries. Our clients receive modern infrastructure, engineering, access to a partner network around the world, as well as a full range of services for "growing" a business. We create a community, provide tools and resources, engage in education.

懿华水处理 / Evoqua Water Technologies

3C3-004

Address: 美国 United States of America Pittsburgh, PA 15222 USA-Suite 3300-210 Sixth Avenue
Tel: 021-51183777
Email: xiaoyu.fang@evoqua.com
Web:

HMG Supply Chain Holding Co.,Ltd. / HMG Supply Chain Holdings Co.,Ltd.

3C3-008

Address: 香港地区 HongKong China UNIT2, LG1, MIRROR TOWER, 61 MODY ROAD, TSIM SHA TSUI, KL
Tel: 021 50366218
Email: jinge_lu@hmglog.com
Web: www.hmgscg.com

泓明供应链集团创始于1995年，集团以中国(上海)自由贸易试验区为基地，不断开发和提供进出口贸易、国际货运代理、通关、仓储运输等第三方综合物流服务。以"链动产业，共创价值"为使命，立志通过供应链创新，为客户提供差异化和高价值服务，成为中国最大的产业供应链服务商！

Since 1995,the Group continuously develops and provides integrated third-party logistics services such as import and export trade, customs clearance, warehousing. With the mission of "chain-driven industry, creating value together". To provide customers with differentiated and high value services, become China's largest industrial supply chain service providers!

Wiscon Envirotech Inc.

3C3-001

Address: 加拿大 Canada British Columbia-Vancouver-1125 50th AVE W
Tel: 020-31133114
Email: wiscon@wiscon.com
Web: www.wiscon.com

Wiscon致力于提供固体废物回收利用的整体解决方案及设备。具有12多年的固废回收经验，目前的主要产品有：破碎机、单轴撕碎机、双轴撕碎机、四轴撕碎机；还有针对不同物料的废旧塑料破碎清洗线、家电回收生产线、餐厨垃圾、危废处理方案。

Wiscon provides solid waste treatment solutions and equipment. With over 12+ years of experience in recycling and size reduction, our products range from shredder to crusher and from plastic washing line to electronics recycling line for various materials.

TK-Maschinenbau

3C3-006

Address: 奥地利 Sipbachzell-Gewerbepark Ost 23; A-4621 Sipbachzell, AUSTRIA Austria Gewerbepark Ost 23; A-4621 Sipbachzell, AUSTRIA
Tel: 0086-21-58516421 +43 7240 20 700
Email: Yang@hygateway.combtheischinger@tk-m.at
Web: www.tk-m.at

TK Maschinenbau公司由德国和奥地利技术专家合作设立,是一家专门为钢铁和有色金属加工行业，提供独特的设备和特殊技术解决方案的全球性公司。公司主要提供：全自动封头加工设备；板边铣床；环缝和直缝焊接清根铣床；锯床；深孔钻床；移动式坡口机；锅炉及管道铣床；产品设计和开发；

TKM is a global company specialized in technical solutions for the steel and non-ferrous metals industry . We mainly provide the following equipment:• Boiler end beveling machines •Boiler and Pipe milling machines • Plate edge milling • Orbital milling machines • Longitudinal milling machines • Saw cut off machines • Mobile beveling machines Process engineering

奥地利是能公司 / scan Messtechnik GmbH

3C3-009

Address: 奥地利 Austria 维也纳-1200 Vienna-Brigittagasse 22-24
Tel: 021-34060311
Email: sales@s-can.at lxiao@s-can.cn
Web: www.s-can.cn

s::can 奥地利是能公司于1999年在奥地利维也纳成立，是全光谱水质在线分析仪的发明者，用户无需了解复杂的化学、物理测量原理，是能公司使"即插即测"成为现实。公司是集产品研发，设计，制造和销售以及服务为一体的专业厂家，为客户在饮用水、地表水、地下水、污水、工业应用以及环境监测等方面提供在线水质监测和安全预报警系统，还可进行污染物预警溯源。

scan is the world technology leader for submersible online spectrometer probes, water protection systems and event detection software.Our products measure a wide range of parameters in numerous applications.More than 10000 s::can monitoring systems are in use worldwide for drinking-, environmental-, waste-, and industrial water applications.

海克斯康制造智能 / Hexagon Manufacturing Intelligence

3C4-001

Address: 英国 萨利-科巴姆 朴茨茅斯路78号 United Kingdom Surrey-Cedar House,78 Portsmouth Road,Cobham
Tel: 400 6580 400
Email: info.cn@hexagonmetrology.com
Web: www.hexagonmi.com.cn

海克斯康制造智能通过将质量融入产品全生命周期，帮助客户实现以质量为核心的智能制造，为客户提供实现生产速度和生产力加速的自信，并提升产品品质。我们从质量层面深入工业制造，为用户提供从设计工程的虚拟仿真、生产制造CAD/CAM加工和仿真、质量控制的计量检测、大数据分析和管理，到智能工厂解决方案的产品全生命周期的质量解决方案。将质量内置于制造的核心环节，帮助制造业用户将质量数据转化为可操作的智能。
Hexagon Manufacturing Intelligence helps industrial manufacturers develop the disruptive technologies of today and the life-changing products of tomorrow. We work with our customers to improve productivity by embedding quality throughout the product lifecycle.

瑞士斯达拉格公司 / Starrag AG

3C4-002

Address: 瑞士 Switzerland St.Gallen-Rorschacherberg-Seebleichestr. 61
Tel: 021-20249800
Email: Ruby.Lu@starrag.com
Web: www.starrag.com

斯达拉格集团是制造高精度机床的全球技术领导者，产品主要用于对金属、复合材料及陶瓷材料工件进行铣削、车削、镗削和磨削加工。主要客户为在航空航天、能源、运输和工业领域从事国际业务活动的公司。除了机床系列，斯达拉格集团还提供集成的技术和维护服务，显著提高了客户生产率。总部位于瑞士罗尔沙赫，并在瑞士、德国、法国、英国和印度设有生产基地，同时在许多其他国家建立了销售和服务子公司网络。
Starrag Group is a global technology leader in manufacturing high-precision machine tools for milling, turning, boring and grinding workpieces of metallic, composite and ceramic materials. Main customers are internationally active companies in Aerospace and Turbines, Industrial and Transportation as well as Luxury Goods and Med Tech sectors.

INSIZE USA,LLC.

3C4-003

Address: 美国 United States of America 3492 Diversified Drive, Loganville, GA 30052
Tel: 0512-68086660
Email: sales-k@insize.com
Web: www.insize.cn

Our aim: •Quality products made to international standards with full guarantee •Innovation by continually striving to improve and develop new products •Service and support to ensure you have trouble-free use of our products •High performance products at a good price INSIZE is our standard quality and made in Asia INSIZE PLUS is our premium quality and mainly made in Germany,UK and Italy

Promau S.r.l.

3C4-004

Address: 意大利 Italy Via Civinelli, 1150 47522 Cesena (Forlì Cesena) Italy
Tel: 021-64883162*806
Email: yyjiang@davi.com
Web: www.davi.com

DAVI (戴蔚)，1966年始创于意大利，是世界著名的重型卷板机、重型型材弯曲机、高效生产线及定制化设备制造商。DAVI 拥有业内最高数量的专利，所有机器100%意大利制造.位于美国得克萨斯州和中国上海的分公司，以及由100多家经销商组成的全球销售和服务网络为DAVI 随时向全世界提供销售和客户服务提供了保证。
Born in Italy in 1966, DAVI is a famous manufacturer of heavy duty plate rolls, heavy duty angle rolls, high productivity lines and customized rolling machines.DAVI also owns the highest number of patents in the industry and all machines 100% made in Italy.The branches in Texas and Shanghai and the whole network of more than 100 dealers assure sales and service all around the world.

EMKA Beschlagteile GmbH & Co. KG

3C4-005

Address: 德国 Germany Velbert-Langenberger Str. 32 • 42551 Velbert, Germany
Tel: 13920526596
Email: raeka.han@emka.cn
Web:

Werkzeugmaschinenfabrik WALDRICH COBURG GmbH

3C5-001

Address: 德国 Germany Germany-Coburg-Hahnweg 116
Tel: +4995617333630
Email: sven.grosch@jche.com
Web: www.waldrich-coburg.de

At WALDRICH COBURG, innovative engineers and qualified specialists develop and manufacture precision large machine tools. We are exactly the right partner for our customers whenever particularly high demands are placed on workpiece machining in terms of precision, cutting performance, workpiece dimensions, complex technologies and productivity.

株式会社 ミツトヨ（Mitutoyo Corporation）/ Mitutoyo Corporation

3C5-002

Address: 日本 神奈川県-川崎市-高津区坂戸 1-20-1 Japan Kanagawa- Kawasaki-shi-20-1, Sakado 1-Chome, Takatsu-ku
Tel: 021-58360718
Email: guoyy@mitutoyo.com.cn
Web: www.mitutoyo.co.jp

三丰公司自1934 年创业以来，秉承着“高品质”的宗旨，向全球市场提供优质千分尺、卡尺等量具产品，以及三坐标测量机、形状测量仪、影像测量仪等系列产品。在以“纳米技术”为代表的科学技术迅猛发展的今天，对“测量”技术提出了更高，更精密，更尖端的要求。三丰公司作为全球知名的精密测量仪器综合厂家，在测量技术，研发技术生产技术等方面承担起为人类社会做贡献的责任。
Since its establishment in 1934, Mitutoyo has been adhering to the "high quality" principle, providing high-quality micrometers, calipers and other measuring products to the global market, as well as CMM and other products. As a world-renowned manufacturer of precision measuring instruments, Mitutoyo Corporation assumes responsibility for contributing to human society in measurement technology.

WIKUS-Sägenfabrik Wilhelm H. Kullmann GmbH & Co. KG

3C5-003

Address: 德国 Germany Melsunger Straße-Spangenberg-Melsunger Straße 30, 34286 Spangenberg, Deutschland
Tel: 021-31260988
Email: elaine.tian@wikussawtech.com.cn
Web: www.wikus.com

German technology is the pronoun of quality assurance. The German WIKUS sawing industry has focused on producing band saw blade for 60 years. It has a value oriented continuous innovation and promotion. It has independent R & D manufacturing team and a number of patent technology and thousands of data databases to provide the most accurate and suitable sawing solutions for customers.

sports republic AB

3C5-004

Address: 瑞典 Stockholm- Stockholm-Repslagargatan 6 Stockholm Stockholm Sweden Stockholm-Stockholm-Repslagargatan 6
Tel: 17718346375
Email: erico@sports-republic.org
Web:

北欧万众之星具有深厚的产业投资实力，海内外资金池超过50亿美元的规模，目前在张家口市高新区建设的国际冰雪运动装备产业基地已经投产运行。北欧万众之星具有全面的、实质性资源平台及解决方案。有国际化的教练群、完整的系统化软件及科技支持培训。从省市队建立培训到冰雪进校园和建设冰雪运动特色学校/冬奥示范学校，全面系统中国的冰雪发展水平。
SPORTS REPUBLIC is sports industry advisory and concept development innovation agency from Nordic country Sweden. Its Europe-China Winter Sports Alliance Platform connects and facilitates resources exchanges for states, campus, athletes, industry players between China and Nordic. Sports Republic is the Nordic gateway leading kids and youth to learn and enjoy winter sports.

Schenck Process Holding GmbH

3C5-005

Address: 德国 Germany Pallaswiesenstraße 100 64293 Darmstadt, Germany
Tel: 010-64817800-315
Email: keke.lv@schenckprocess.com.cn
Web: www.schenckprocess.com

申克公司具有一百多年生产称重和振动设备的历史，是测量与流程技术方案的全球市场领导者。结合卓越设备和广泛的工艺知识，我们为工业称重、给料、输送、筛分、空气过滤与自动化领域，开发和制作创新解决方案。
Schenck Process Holding GmbH is the global technology and market leader in applied measuring technology with more than 100 years' experience in weighing and vibratory equipment manufacture. Combining outstanding equipment and extensive process knowledge, we develop and manufacture innovative solutions for weighing, feeding, conveying, screening, air filtration, and automation applications.

Precision Surfacing Solutions GmbH & Co. KG

3C6-001

Address: 德国 Germany Rendsburg-24768-Buesumer Str. 96
Tel: +494331458210
Email: g.felske@lapmaster-wolters.de
Web: www.precision-surface.com

PSS集团做为全球最大的超精密机床生产制造商之一，旗下拥有Lapmaster，Peter Wolters，Elb，aba，REFORM，KEHREN等多个品牌，拥有数十年的生产加工经验。PSS已成功开发出表面研磨，精密研磨，抛光，去毛刺，精密冲裁，晶圆切片和珩孔的完美加工解决方案。
Precision Surfacing Solutions is the global OEM of Lapmaster, Peter Wolters, Elb, aba, REFORM, KEHREN, and a growing portfolio of other brands, with many decades of experience. PSS has successfully developed processing solutions for surface and profile grinding, fine grinding, lapping, polishing, deburring, fine blanking, wafer slicing, and bore honing & finishing.

Breton

3C6-002

Address: 意大利 Italy TV-Castello di Godego-Via Garibaldi, 27
Tel: +3904237691
Email: info@breton.it
Web: www.breton.it

Breton, founded on 1963, produces high speed machining centres specially conceived for high speed, top performance and unbeatable versatility. Breton' s full range of machines meets them easily in the major industrial sectors such as aerospace, energy, gear

Metabowerke GmbH

3C6-005

Address: 德国 Germany Stuttgart-Nutringen-Metabo-Allee 1
Tel: 021-24162585
Email: sky.ye@metabo.com.cn
Web: www.metabo.com.cn

麦太保的发展历程体现了我们对电动工具的专注和我们对“德国制造”精湛工业的承诺。我们麦太保始终代表高水准的德国制造工艺，向客户提供最专业的产品。麦太保起源于德国纽廷根，活跃于世界各地,享誉全球,从而成为世界闻名的电动工具品牌。我们是积极的、有目标的、灵活的，我们有勇气面对未知和曾经获得的成功，现在我们已经开启新的征程。创新的力量和持续的研发奠定了我们是系统解决方案的提供者。
With Metabo you always make a good decision. Since productivity is the sum of mobility,safety,robustness and service, it plays acentral role for us - just as it does for you, your employees and the efficiency of your company,In a nutshell:With Metabo you are always on the safe side. In every Metabo tool there is traditional German engineering ingenuity.Since 1924 we have been developing innovative

CIDAN Machinery Sweden AB

3C6-003

Address: 瑞典 Sweden P.O.Box28
Tel: 13817191940
Email: alice.xie@cidanmachinery.com
Web: www.cidanmachinery.cn www.cidanmachinery.com

瑞典CIDAN机械，在1907年就已经开始生产制造机床,在当时以Gotends Mekaniska Verkstad AB著称。现今的CIDAN机械集团总部设在瑞典的Gotends，法定公司名称CIDAN Machinery Sweden AB,旗下现拥有Gotends、CIDAN、nulT和Forstner 四大品牌。CIDAN Machinery Sweden AB, better known under the former name Gotends Mekaniska Verkstad AB in Sweden, has been manufacturing machines since 1907. CIDAN group headquarter will be in Götene, Sweden, under the legal name of CIDAN Machinery Sweden AB. The four current brand names of Göteneds, CIDAN ,nulTand Forstner will be kept in the new group constellation.

DUPLO SEIKO CORPORATION

3C6-004

Address: 日本 Japan Wakayama-Kinokawa-shi-353 Koudai，Kinokawa-shi，Wakayama，Japan.
Tel: 0531-88032327-8018
Email: ljb@duplo-shandong.com
Web: www.duplo-seiko.co.jp

Development and sales of Digital Duplicator、Cutter、Crease、Mailing Equipment、Paper recycling equipment and other office peripheral equipments.

合济工业股份有限公司 / EVERISING MACHINE CO.

3C6-006

Address: 台湾地区 台湾-台中市南屯区精科一路1号 Taiwan Taiwan-NO. 1 Jingke 1st Road, Nantun District, Taichung 408
Tel: 0512-57665353
Email: evrs@everising.com.cn
Web: www.everising.com

合濟公司創立於1982年，為台灣地区最專業的中大型金屬帶鋸床製造廠，目前有台灣地区台中一廠及二廠，大陸昆山廠，年產量合計超過2000台以上；公司以銷售中大型鋸床為主力，銷售遍佈全球超過60個國家地區，並且在全世界40幾個國家有代理商。台灣地区分別於台北、台中、台南、高雄自己設立銷售據點，大陸地區陸續於華北、華中及華南地區設立十多處銷售及服務據點，提供全方位的鋸切技術及最完善的售前及售後服務。多年來以「顧
EVERISING has been specializing in mid to large size band saws and circular saws since 1982. Our R&D innovations have yielded constant break-through over the years. With two factories in Taichung, Taiwan Region and another in Kunshan , China , yearly output is in excess of 2000 units. In Taiwan Region, sales offices are established in Taipei , Taichung , Tainan and Kaohsiung . In China has over ten office

aquatherm GmbH

3C6-007

Address: 德国 Germany Olpe-Attendorn-Biggen 5
Tel: 52986002
Email: cherrychen@aquatherm.cc v.wang@aquatherm.cc
Web: www.aquatherm.cc

Aquatherm（德国阔盛）取自拉丁语aqua和热therm这两个词。德国阔盛成立于1973年，成立之初主要从事地板辐射采暖系统的开发、生产及安装，距今已有40余年管道生产经验.1978年,研发出专利原料fusiolenPP-R管道系统，为给水管道更安全，更健康，更环保的目标做出了杰出贡献！所以公司被授予绿色环保组织的奖项。“独具匠心”和“成为卓越的行业领导者”一直以来是德国阔盛公司的核心。
aquatherm is the world' s leading manufacturer of the plastic pipe systems. The company was founded in 1973. At that time, aquatherm was one of the first three companies on the European market to offer underfloor heating systems. In 1980 we developed the plastic pipe system Fusiotherm®. This innovation has been the basis of our continuous growth up to the present day.

德国海德莱（HYDRA）电容器公司 / HYDRA Components GmbH

3C6-008

Address: 德国 柏林-Eichborndamm 167-175 Gebäude 55, 13403 Germany Berlin-Eichborndamm 167-175 Gebäude 55, 13403
Tel: 021-56037887
Email: hydravip@126.com
Web: www.hydra-components.com

德国海德莱（HYDRA）电容器公司创建于1899年，总部位于德国柏林。HYDRA专业生产和销售电容器,在超百年的发展历程中,经历了AEG收购(1925年)和二战后(1945年)重启,1998年在捷克设立工厂。2018年在中国设立了代表处-还得来（上海）电气科技中心。
HYDRA was founded in 1899, headquartered in Berlin, Germany. HYDRA specializes in the production and sale of capacitors. In over a hundred years of development, it went through the AEG acquisition (1925) and the restart after world war ii (1945). In 1998, HYDRA established a plant in the Czech Republic. In 2018, it set up a representative office in China -HAIDEILAI.

Elpanneteknik Sweden AB

3C6-009

Address: 瑞典 Sweden Gothenburg-Lilla Bommen 1, SE-41104
Tel: +86-13816768382
Email: jeanne@elpanneteknik.com
Web: elpanneteknik.com

Elpanneteknik Sweden AB是世界尖端的浸没式高压电极锅炉的供应商，是世界上为数不多拥有高压电极锅炉制造技术的公司，其浸没式电极锅炉因为无污染、无排放、高电压、大功率、高安全性、高效率等众多优点已在中国被广泛运用于替代燃煤锅炉进行城市供暖，热电厂灵活性调峰，核电站的辅助锅炉等领域。
Elpanneteknik Sweden AB is the world leading supplier of Immersion type electrode boilers, and also one of few companies with high voltage electrode boilers manufacturing technology in the world. Its immersion type electrode boilers have been widely used in China to replace coal-fired boilers in the fields of urban heating, plant flexibility peak shaving etc.

TAM-EUROPE d.o.o.

3C7-001

Address: 斯洛文尼亚 Slovenia Maribor-Cesta K Tamu 33, 2000
Tel: 01067873943
Email: lvchao@chtcmotor.com
Web: www.tam-durabus.eu

TAM-Europe D.O.O.公司坐落于欧洲中部斯洛文尼亚马里博尔市，其品牌拥有超过70年的历史，此前是南斯拉夫最大的工厂和唯一的客车企业。TAM目前是以机场摆渡车、高端客车、新能源客车为主要产品的商用车研发和制造公司，其产品在欧洲、中东、俄罗斯、中亚等地有较高的知名度。新开发的新能源机场VIP摆渡车已推向市场。

Elkem ASA

3C7-003

Address: 挪威 Norway Oslo-Drammensveien 169
Tel: 021-54428464
Email: eileen.jiang@elkem.com
Web: www.elkem.com

Founded in 1904, Elkem is one of the world's leading suppliers of silicon-based advanced materials. Elkem is a publicly listed company on the Oslo Stock Exchange, and is headquartered in Oslo. The company has 6200 employees with27 production sites and sales offices in a total of 28 countries worldwide. In 2018 Elkem had revenues of 25.9 billion NOK.

Seage Technologies LLC

3C6-010

Address: 美国 United States of America WA 98275-Mukilteo-5912 96th St. SW
Tel: 021-55051206
Email: cloude.chen@gallopeng.com
Web:

BUSS AG

3C7-002（001）

Address: 瑞士 Switzerland HOHENRAINSTRASSE 10, 4133 PRATTELN
Tel: 41 61 825 68 76
Email: christian.hauser@busscorp.com
Web: www.busscorp.com

BUSS is a global leader in compounding systems for demanding applications. As the original manufacturer of the reciprocating Kneader technology. BUSS offers unique compounding solutions that continue to set the standard for heat or shear critical applications in the plastics, aluminum, chemical and food industries.

RedWave Labs Ltd

3C7-004

Address: 英国 United Kingdom Oxfordshire-Harwell, Oxford-173 Curie Ave
Tel: +441235838529
Email: dpermogorov@redwavelabs.com
Web:

美国维思科技有限公司 / Virtual Enterprise System Solutions Inc.

3C6-011

Address: 美国 United States of America California-San Jose-250 W Tasman Dr Suite 180
Tel: +1 202-412-7829
Email: jzyjiang@aol.com
Web: www.vess.ai

维思以企业升级转型为最终目的，结合大数据，利用人工智能、网络安全和物联网平台为企业提供解决方案和战略咨询服务。我们拥有专业化的团队，占据硅谷高科技蓬勃发展的地理优势，结合权威专家和丰富的实践经验来推动智慧城市方方面面的发展。通过利用最高端的人才，最前沿的技术，最先进的方法为客户提供全方位、多层面的优质服务，为智慧城市提供一整套的解决方案。
VESS helps companies of all sizes respond to industry transitions in order to stay competitive. We are a team of talents with extensive industry experience and top technique background. We focus on applying front-end technology to help enterprises achieve technology transformation.

KÖLLEMANN GMBH

3C7-002（002）

Address: 德国 Germany Am alten Wehr 9-12, D-53518 Adenau
Tel: +49(0)2691 308 50
Email: matthias.ginster@koellemann.de
Web: www.koellemann.de

Edwards Vacuum Ltd

3C7-005

Address: 英国 United Kingdom West Sussex-Burgess Hill -Innovation Drive
Tel: +86 021 31167034
Email: liya.ji@edwardsvacuum.com
Web:

飒特欧洲（爱尔兰）责任有限公司 / SATIR Europe (Ireland) Company Limited

3C7-006

Address: 爱尔兰 Ireland Louth-Drogheda-Marley's Business Park, Marley's Lane
Tel: +353 41 9844371
Email: enquiry@satir.com
Web: www.satir.com

SATIR Europe was founded over 11 years ago in Ireland. We are one of the world's leading thermal imaging camera's manufacturer's who focus on developing, marketing and producing our products to a high standard. SATIR cameras are used for predictive and preventive maintenance, research and development, temperature measurement.

伊斯泰克硬质合金公司 / HARTMETALL ESTECH AG

3C8-002

Address: 瑞士 卢塞恩州-希茨基希-工业路13号 Switzerland Luzern-Hitzkirch-Industriestrasse 13
Tel: 13910599633
Email: info@hartmetallag.com.cn
Web: www.estech.com.cn

伊斯泰克硬质合金公司是一家独立的硬质合金工厂，始于从 1941 年，在中国通过德州凯狮商贸有限公司开展业务。工厂位于瑞士卢塞恩希茨基希。主要产品有硬质合金圆棒、带孔的棒料、硬质合金块、板条、锯片、枪钻头、刀片等。公司不生产工具，不和客户竞争。
Hartmetall Estech AG is an independent cemented carbide factory which is stared from 1941s, sales products at CHINA through DEZHOU CRATEX TRADE CO., LTD. ESTECH' factory located at HITZKIRCH of Lucerne Switzerland. The main products is rod bars, rod bars with holes, blocks, flats, slitting saws, gun drill tips, inserts, etc. The company does not produce tooling so is not client's competitor.

Nord-Lock International AB

3C8-005

Address: 瑞典 Sweden Malmö-S:t Johannesgatan 1D 211 46
Tel: 5204 5671
Email: fred.lee@nord-lock.com
Web: www.nord-lock.com.cn

With more than 30 years of experience, the Nord-Lock Group is focused on solving the toughest bolting challenges for every industry. As a global leader in bolting solutions, Nord-Lock has decades of documented success in every major industry, including Oil & Gas, Power Generation, Railway, Mining, Steel, Shipbuilding, Construction, Manufacturing and Transportation. Our unique combination of secur

TIMESAVERS INTERNATIONAL B.V.

3C7-007

Address: 荷兰 Netherlands ZEELAND-GOES-FRUITLAAN 20-30, 4462 EP
Tel: 021-69980290
Email: info@timesavers.cn
Web: www.timesavers.com.cn

荷兰砂霸是拥有七十多年历史的宽带磨砂设备制造商，设备适用于金属、木材及其它多种工件的抛光及研磨。砂霸已向世界各地金属生产加工企业提供逾55000台设备。其万向柔性转刷设备可实现一次全方位均匀去除工件经激光切割、冲压、机加工形成的毛刺，并完成边角倒圆，还可视需要打造乱纹表面。特殊转刷设计助您轻松省时完成凹凸件、不规则件和表面覆膜涂层工件的毛刺处理。可加工材质范围广泛，涉及航空航天、餐饮、医疗等领域。
For over seventy years, Timesavers has been providing widebelt abrasive machines for metal, wood, plastics and a wide range of other materials. With unmatched service and support, over 55000 machines in the field today, and factory trained independent distributors, you can be sure that Timesavers will deliver "The finest finish in the world."

奥地利福伊特起重机有限公司 / Voith–Werke Ing. A. Fritz Voith Gesellschaft m.b.H & Co KG

3C8-003

Address: 奥地利 Austria 奥地利林兹特劳恩，Ganglgut大街13号
Tel: 0512-82072666-8198
Email: brandser@eurocrane.com.cn
Web: www.voith.at/en/company/about-us

Voithcrane于1946年成立1961年交付第一台起重机，1971年改组为目前的公司架构。该公司一直由Voith家族所有，近20年来由职业经理人管理。 该公司总部位于奥地利的林兹，专注于为客户提供定制化的特种起重机及自动化、智能化的物料搬运解决方案，主要产品为自动化起重机、冶金起重机、电磁吸盘起重机、真空吸盘起重机、堆垛起重机、抓斗起重机等。

Schenck RoTec GmbH

3C8-006

Address: 德国 Germany Landwehrstraße 55 D-64293 Darmstadt
Tel: 021-66897494
Email: wang.li@schenck.cn
Web: www.schenck-rotec.com

专业生产平衡机的申克平衡公司SCHENCK ROTEC GMBH是世界上最大的动平衡设备制造商，总部位于德国达姆施达特市，现属于德国杜尔集团。创建至今已生产平衡机有100多年的历史，向全球提供了超过60000台各类平衡机现共有1200多名员工，年销售额约2.3亿欧元，在技术、实力和市场份额方面遥遥领先。
SCHENCK ROTEC GMBH is the world's largest manufacturer of dynamic balancing equipment, headquarter located in Darmstadt, Germany, and now belongs to durr group.

株式会社栗田机械制作所 / KURITA MACHINERY MFG.Co.Ltd.,

3C8-001

Address: 日本 JAPAN-大阪市-西区境川2丁目1番44号 Japan JAPAN-OSAKA-2-1-44,SAKAIGAWA,NISHI-KU
Tel: 02162171800
Email: zhaosm11@vip.sina.com
Web: www.kurifil.co.jp

日本栗田机械制作所始建于1930年，一直以制造压滤机的专业厂家而著称。产品畅销世界各地。公司有90年的固液分离经验，长年积累的庞大经验运用在各行各业，为各行业提高工作效率，做出了卓越的贡献。我们以让用户满足为宗旨，努力成为服务社会的公司。
Since it was established in 1930,KURITA Machinery has grown and prospered in the field of filter press manufacturing. As the originator of the automated filtering system,we have supplied our unique products and techniques throughout the word.Kurita Machinery intends to continue refining its technology for the good of society and through antipollution measures,the health of the environment.

株式会社京三制作所 / Kyosan Electric Manufacturing Co., Ltd.

3C8-004

Address: 日本 神奈川县-横滨市-鹤见区平安町二丁目29番地1 Japan Kanagawa-Yokohama-2-29-1 Heian-cho, Tsurumi-ku
Tel: 010-6395-0256
Email: baoqing@kyosan.com.cn
Web: www.kyosan.co.jp

京三制作所自1917年创业以来，遵循"安全与可靠"的基础方针，作为信号系统的领军企业不断前行，目前以"铁路信号系统"、"交通管理系统"、"电力转换系统"为核心，并在 "站台安全设备"和"信息系统"等领域展开业务。
Since its foundation in 1917, Kyosan Electric Manufacturing strove as a leading manufacturer of signal systems to expand our business in the core areas of"Railway Signaling Solutions,"Traffic Management Solutions" and "Power Conversion Solutions," as well as new domains such as "Platform Safety Equipment" and "Information Systems" that we operate today.

德国ETE艾森能源技术有限公司 / Energietechnik Essen GmbH

3C8-007

Address: 德国 Germany Essen-Westendstrasse 15
Tel: 0086 21 54196923
0086 13816888178
Email: pearljingshuxu@vip.sina.com
Web: www.energietechnik-essen.de

我公司是百年以上德国老厂,前身为克虏伯锻造厂。是世界上规模最大历史最悠久的发电机护环生产商,也是世界上最强应力材料P900(X8CrMnN18-18)的工艺研发者。1975起，我公司研发了高氮钢品牌CRONIDUR30 (X30CrMoN15-1)并广泛应用于航天航空，精密仪器，轴承，医药领域，成为行业领先企业。
For over 100 years, we have been the global specialist for retaining rings in the field of energy-based mechanical engineering – a wealth of experience that has made us an international market leader. We develop and produce nitrogen-alloyed steels such as CRONIDUR® 30. Our steels are the driving force behind a variety of markets, from warehousing technology to aerospace and medical technology.

AIR0 OY

3C8-008

Address: 芬兰 Finland Otakaaris 5 02150 Espoo
Tel: 021-37031339
Email: louisa.lou@air0.fi
Web: www.air0.fi

芬兰AIR0 OY公司,成立于2014年,依托其强大的技术团队,研发并生产国际领先的室内空气净化器及相关产品,目前已频频亮相于芬兰各大公共领域及欧洲市场。(smAIRt空气净化器,不仅性能卓越,而且其独特的实木外壳,多彩的色调,个性和设计深得客户的青睐),公司坚持以客户需求为导向,致力于提供更好更安全,洁净的空气给每一位用户。
Air0 is a Finnish technology compay, specializing in high-end indoor air purification solutions for professionr use. Air0's Total Solution is a revolutionary approach to air purification, combining the best of stand-alone purifiers and centralized purification.Patented smAIRt technology guarantees extremely high clean air delivery rate even against smallest particles.

RAC ENERGY SRL

3C8-011

Address: 意大利 Italy BG-Via Arturo Toscanini, n.3, 24040 Bonate Sopra
Tel: +39 035 077 1778
Email: info@racvalves.com
Web: www.racvalves.it

RAC是一家著名的工业阀门及液位计的生产厂家,拥有六个欧洲著名的阀门及液位计品牌,超过一百年历史,其生产基地分别位于意大利贝加莫及米兰,其产品行销全世界六十多个国家,深受客户好评。
RAC is a well-known manufacturer of industrial valves and level gauges. It has six famous European valve and level gauge brands. It has more than 100 years of history and its production bases are located in Bergamo and Milan, Italy. More than 60 countries in the world, praised by customers.

株式会社凯特莱芝 / CATARISE CORPORATION

3C8-014

Address: 日本 神奈川-川崎市-川崎区南渡田町1-1 京浜大厦2F Japan Kanagawa-Kawasaki-Keihin bld. 2F, 1-1 Minamiwataridacho, Kawasaki-ku
Tel: +81-44-201-7451
Email: hayakawa.o@cata-rise.co.jp
Web: www.cata-rise.co.jp

株式会社凯特莱芝(CATARISE CORPORATION)提供光触媒服务。如果作为减少有害化学物质危害的性能材料被广泛认知,预计将有更大的需求。本公司提供的产品是面向在光触媒市场中预计最有扩大可能性的有关生活领域产品。与扩大市场的同时,通过改善环境为社会做出贡献。目前我们在中国国内有10家代理店,意识到中国市场的重要性,我们想扩展更多的代理店。
CATARISE CORPORATION provides competitive quality, performance and price in the field of photocatalytic coating liquids for the interior and the textile products. These features have allowed our photocatalysts to be applied on almost all commodities for living, such as clothing. We mainly sell products through agencies (10 Chinese companies) and are actively recruiting new sales agencies.

TOYA S.A

3C8-009

Address: 波兰 Poland WROCLAW -UL. SOLTYSOWICKA 13-15 51-168
Tel: +48 71 324 62
+48 71 324 62 91
Email: EXPORT@YATO-SH.COM
Web: www.yato.com
www.yato.pl

TOYA S.A. is one of Poland's leading distributors of industrial goods. It is a leader of the Polish hand and power tools market for both professional and DIY use.The scope of the Group's business includes product design, outsourcing of production,supervision over production quality, and distribution of products under its own brands throughout an extensive sales network all over the world.

欧勃亚园艺实业股份有限公司 / Oboya Horticulture Industries AB

3C8-012

Address: 瑞典 Sweden 哥德堡-Sweden-Snickarevägen 2,44361 Stenkullen,
Tel: 0532-88138559
Email: chunyan.ma@oboya.cc
Web: www.oboya.cc

欧勃亚园艺实业股份有限公司于2014年11月14日在瑞典斯德哥尔摩上市,证券代码 OBOYA B。2017年12月转板纳斯达克国际领先的种植业一站式平台,为设施农业种植产业提供全生命周期服务。业务遍布全球50多个国家和地区,尤其是"一带一路"两线辐射圈的国家和地区。
OBOYA Horticulture Industries AB was listed in Sweden in November 2014, Stock Code: OBOYA B. In December 2017 the company was relisted to Nasdaq First North in Stockholm.Focused on key home markets in China and Scandinavia, Oboya will be a One-Stop-Shopping Solutions Platform providing Full Life Cycle Services to modern horticultural growers.

得风 / DELFIN S.R.L

3C9-001

Address: 意大利 Italy Piemonte-Settimo Torinese (TO)-Strada della Merla, 49/a 10036
Tel: 021-51951407
Email: jingpan.yao@shannover.com
Web: www.delfinvacuums.it

Delfin 于1982年成立于意大利都灵,1991年Delfin的创始人倾注满 腔热情开始了工业吸尘器的生产。今天,Delfin已经成为工业吸尘器 行业的市场主导者之一。研发、创新和激情直接孕育了Delfin系列产品的诞生,市场独一无二。至今delfin具备十几个产品系列,标准机型100多个。
Delfin was founded in Turin, Italy, in 1982. In 1991 the passion of its founder leads to the start of the production of industrial vacuum cleaners. Today Delfin has become one of the few leading manufacturer in the industrial vacuum cleaners market.

Moog Control Hong Kong Ltd

3C8-010

Address: 香港地区 HongKong China Hong Kong -Kowloon -Unit 6, 21/F, Laws Commercial Plaza, 788 Cheung Sha Wan Road, Lai Chi Kok
Tel: 02128931689
02128931600
Email: bhe@moog.com
Web: www.moog.com

穆格股份有限公司是全球领先的精密运动控制产品和系统的设计、制造和集成商。穆格工业集团负责综合利用运动控制以及驱动/数据技术,设计和制造极其可靠的产品、解决方案和服务。我们将世界一流的技术与专家团队的咨询服务结合到一起,产品和方案广泛应用于能源、工业机器、船舶、仿真和测试等行业。我们也帮助注重性能的公司设计和开发新一代机器。
Moog Inc. is a worldwide designer, manufacturer and integrator of precision control components and systems. Moog Industrial Group designs and manufactures highly reliable products, solutions and services using motion control and power/data technologies.

小仓宝石精机工业株式会社 / OGURA JEWEL INDUSTRY CO.,LTD.

3C8-013

Address: 日本 东京-东京都大田区大森北5-7-12 Japan Tokyo- 5-7-12 omori-kita,ota-ku
Tel: 0081-3-3763-3111
Email: sales7@ogura-indus.co.jp
Web: www.ogura-indus.co.jp www.oguar-indus.co.jp

作为日本工业宝石加工业的先驱者,我司具有全球最顶尖的工业宝石加工技术。在长达125年对各种工业宝石以及高硬度脆性材料的加工,我司积累了丰富的经验。我司制作的宝石产品应用于诸多领域。如放电加工机床,半导体制造设备,分析设备,医疗机械等等。除工业宝石产品之外,我司也生产并销售磨削金刚石的砂轮。其优异的性能得到各大刀具厂商与汽车厂商的好评。
As a pioneer of processing industrial jewels, OGURA have a high level of processing technology. Since the company foundation 125 before, we also have accumulated abundant experience in processing hard brittle materials. We provide our products to various industrial fields like semiconductor-, analysis-, medical-EQP, industrial measurement, etc. We also manufacture diamond wheel grinding tools.

HOMAG Group AG

3C9-002

Address: 德国 Germany Baden-Württemberg-Freudenstadt-Homagstr. 3-5,72296 Schopfloch
Tel: +86-21-3774 7100
Email: Godspeed.Lu@homag.com
Web: www.homag.com/cn

With a global market share of over 30% and some 6,500 employees, we develop wood processing solutions around the world. We manufacture machines for furniture and component production and timber work at 14 locations.With a presence in over 100 countries and an extensive distribution network, we are your local partner. We offer highly innovative solutions, as demonstrated by over 1300 active patents

OPRA Turbines BV

3C9-003

Address: 荷兰 Netherlands Overijssel-Hengelo-Haaksbergerstraat 71
Tel: +31 625405715
Email: m.bellemo@opra.nl
Web: www.opraturbines.com

OPRA Turbines advanced turbine technology serves global markets with clean, distributed energy solutions. Setting the standard in terms of availability, reliability and low maintenance costs, OPRA continue to drive the world's energy transition.

MAUNA KEA TECHNOLOGIES

3C9-006

Address: 法国 France Enghien-MAUNA KEA TECHNOLOGIES 9 rue d Enghien – 75010 Paris France
Tel: 18721224392
Email: wutingting@shleisheng.net
Web:

Party B hereby authorizes Party A to act with respect to the matters regarding Party B's participation in the "China International Import Expo 2019" to be held in Shanghai, China. To be specific, Part Microscope reveals the essence of disease information, so that make an accurate diagnosis, France's mauna kea's technology, the company produces the Cellvizio endoscopic laser confocal microscope, optical microscope technology into the patient's body.

特瑞堡 / Trelleborg

3C9-009

Address: 瑞典 特雷勒堡 Sweden 231 22 Trelleborg Sweden
Tel: 053289650708
Email: qingdao@trelleborg.com
Web: www.trelleborg.cn/engineered-products
www.trelleborg.com/marineandinfrastructure

特瑞堡集团始创于1905年,是为最严苛的工业环境开发高性能密封、减振和防护解决方案的全球性工业集团。特瑞堡航运与基建隶属于特瑞堡集团,在全新智能的船舶和基础设施优化思路的支撑下,为公路、铁路、港口、海运码头、桥梁隧道,以及建筑物和发电厂量身定制高性能防水密封、输送及防护解决方案。我们的多学科工程师团队提供从概念设计、制造测试,到安装和售后的专业支持,充分保证并提升了用户的工作安全及成本效益。
Founded in 1905, Trelleborg is a world leader in engineered polymer solutions that seal, damp and protect critical applications in demanding environments. Our innovative engineered solutions accelerate performance for our customers in a sustainable way.

Modern Testing Services (Global) Limited

3C9-004

Address: 香港地区 HongKong China HONGKONG-KOWLOON-601-606, 701-706, 808-816, CEO TOWER 77 WING HONG STREENT CHEUNG SHA WAN
Tel: 021-23509658
Email: llin@mts-global.com
Web: www.mts-global.com

MTS是消费品行业快速,准确和具成本效益的质量保证解决方案的全球战略合作伙伴。利用我们在整个采购流程中的专业知识,可以提高产品上市速度,降低成本,并使产品更好地满足或超出客户的期望。当必须满足发货日期或损害利润时,MTS致力于通过提供全面的产品知识来帮助客户保护其品牌形象,这些知识对于及时做出重要业务决策至关重要。
Modern Testing Services is a global, strategic partner for fast, accurate, and cost effective quality assurance solutions in the consumer products industry. Utilizing our expertise throughout the sourcing process increases speed-to-market efficiency, decreases costs, and better positions your products to meet or exceed customer expectations.

Freeway International Co., Inc.

3C9-007

Address: 美国 United States of America FL-Tallahassee-1462 Constitution Place E
Tel: 13636443228
Email: freewayinc@comcast.net
Web:

IMS Messsysteme Gmbh

3C9-010

Address: 德国 Germany Heiliegenhaus-Dieselstrasse 55
Tel: +49 2056 975-0
Email: info@ims-gmbh.de
Web:

慧莱蒲茵株式会社 / ERE FA Co.,Ltd.

3C9-005

Address: 韩国 京畿道-富川市-五亭区石川路397富川技术园双龙3层303-806 ROK(Republic of Korea) Gyeonggi-do-Bucheon-si-IT303-806 Bucheon Techno Park Ssangyong 3Cha,397,Seokcheon-ro
Tel: 0315-5910109
Email: 598575039@qq.com
Web: www.erefacn.com

ERE FA公司成立于2002年,位于韩国京畿道富川市。从事钢铁、造纸、港口物流等工业领域自动化设备的系统设计与研发、控制、制作工作。在无人天车领域使用自制研发的系统与核心设备,截至2018年已成功运用在218台无人天车项目上。此外,公司拥有无人天车整体实施方案,在识别领域利用独有的3D影像技术,解决了库区内车辆管控及AI安全管控问题。
ERE FA was founded in 2002, My company is engaged in iron and steel industry, paper industry, port logistics and other industrial automation equipment system design and development, control, production. The system and core equipment independently researched and developed in the field of unmanned crane will be applied to 218 unmanned crane project by 2018.

CAE Inc.

3C9-008

Address: 加拿大 Canada Québec-Montreal-8585 Côte-de-Liesse Road, Saint-Laurent
Tel: 010-64094030
Email: winnie.wang@cae.com
Web: www.cae.com

CAE公司是为民用航空、安全防卫及医疗保健行业提供培训服务的全球领导者。CAE公司成立70年来,始终保持业界领先,并将继续凭借创新的全真模拟培训解决方案来帮助定义全球培训标准,让飞行更安全,国防战备更及时,并使患者得到更安全的治疗。
CAE is a global leader in training for the civil aviation, defence and security, and healthcare markets. Backed by a record of more than 70 years of industry firsts, we continue to help define global training standards with our innovative virtual-to-live training solutions to make flying safer, maintain defence force readiness and enhance patient safety.

銀豐株式会社 / GINHO HOLDINGS CO.,LTD

3C9-011

Address: 日本 兵库県-神户市-日本 Japan HYOGO-KOBE-3-2-3,KUMOI-DORI,CHUO-KU
Tel: 0081-78-221-2668 / 81-78-221-2668
Email: weng@ginho.co.jp
Web: www.ginho.co.jp

銀豐株式会社成立于2002年9月11日,前身是有限公司东游记,主要从事贸易与酒店经营。先后并购了4家大阪的酒店。于2015年清空了包括酒店在内的所有不动产。经过将近3年的调整,确定了公司今后发展的四大板块:1.不动产投资、中介 2.日本高精设备销售(主要销售准备出展的高能高温蒸汽垃圾处理器磁力发电机) 3.大宗商品贸易 4.金融投资服务(日本并购咨询、东证市场武士债券发行服务)。

Western High Pty Ltd

3C9-012

Address: 澳大利亚 Australia Queensland-Newstead-Suite 3, 4 Kyabra Street
Tel: +61417754277
Email: inielsen@westernhigh.com.au
Web: www.westernhigh.com.au

Western High is based in Brisbane, Australia and supported by our highly qualified multilingual Chinese partners in Shanghai.With over 30 years of experience in international trade and equipment sourcing, the team at Western High have helped dozens of businesses in the Oceania region. We support our clients by providing a high level of service; specialising in Chinese Equipment manufacture.

UNICO ASFALTOS ESPANA S.L.

3C9-015

Address: 西班牙 Spain Valencia-Sagunto-Calle Laminacion Nave 37B
Tel: 0085239908331
Email: jose@unicoasfaltos.es
Web: unicoasfaltos.es

Our product masFÁCIL is unique in its sector, with a bituminous asphalt concrete (AC16 surf S and our unique patented formula) with the peculiarity can be applied to wet roads and all temperatures (hot, warm or cold) without need for any additives or heavy machinery, offering the advantage of use in the most adverse, strong humid weather conditions, without the need for heavy machinery

Carlo Salvi S.p.A

3C9-018

Address: 意大利 Italy Milano-10-20122-Via Tommaso Salvini
Tel: +93 0341 654611
Email: carlosalvi@carlosalvi.it
Web:

LONATI S.p.A

3C9-013

Address: 意大利 布雷西亚-VIA FRANCESCO LONATI 3-25124 BRESCIA Italy VIA FRANCESCO LONATI 3-25124 BRESCIA BRECIA
Tel: 13018900261
Email: andrea.tomeazzi@lonatigroup.com
Web: www.lonati.com

意大利罗纳地(LONATI)自1945年成立以来, 开始生产棉袜机, 并于1952年拓展至 丝袜机期间, 罗纳地先后收购了不同品牌的机械制造商, 揉合他们的技术, 创新发展 。如今, 罗纳地袜机已经是全球首屈一指的品牌。他们的产品以稳定、可靠、耐用见称 , 扬名内外。宝源香港有限公司于1992年开始推广罗纳地袜机, 为中国袜业打下了殷实的基础。

A Leader in the field of circular knitting machines for hosiery. With a management capable to anticipate market trends and an ongoing professional updating LONATI S.p.A. is able to get a partnershi a partnership with its customers. The company is based on an area of 80,000 square meters ofwhich 24,500 are occupied by buildings. It is located in the San Polo area in the Italian city of Brescia.

OPTORUN CO.,LTD

3C9-016

Address: 日本 Japan Takeno Kawagoe-Saitama-ken-10-Takeno Kawagoe Saitama-ken 350-0801 Japan
Tel: 021-36161290-706
Email: dingr@optorun.sh.cn
Web: www.optorun.co.jp

Optorun Co., Ltd.'s business concept is"providing process solutions with optical thin film coatings using Opto-nanotechnologies". Working as one with our affiliates, we strive to provide products and services in the fields of optical thin film coatings and vacuum technologies that are beneficial to many customers and society as a whole.

Edward Pryor & Son Ltd

3C9-019

Address: 英国 United Kingdom Egerton Street, Sheffield, S1 4JX, UK
Tel: 025-86951888
Email: tianleixin@allmacindustri.com
Web:

Spectrum Dynamics Medical HK Limited

3C9-014

Address: 香港地区 HongKong China-九龙尖沙咀-5 Canton road suite 1729A Ocean Center Hong Kong Hong kong-Tsim Sha Tsui, Kowloon-5 Canton road suite 1729A Ocean Center
Tel: +8615201301654
Email: zhangy@spectrum-dynamics.com
Web:

德國諾貝爾軸承科技有限公司 / GERMAN NOBEL BEARING TECHNOLOGY CO., LIMITED

3C9-017

Address: 香港地区 香港湾仔骆克道301-307号 洛克中心19楼C室 Hong Kong Rm. 19C, Lockhart Ctr.,301-307 Lockhart Rd., Wan Chai, Hong Kong.
Tel: 024-88888496
Email: nobelde@163.com
Web: www.nobelbearing.com

是集设计研发、生产制造、销售配套、技术服务于一体的国际化全球化的企业集团公司。产品主要销往欧洲、北美、澳洲、中东、亚太等地区。诺贝尔始终致力于开拓和巩固在机械设备传动系统和控制系统领域的尖端科技。尤其致力于高精度、高性能、低噪音、低振动的精密轴承及数控机床轴承和新能源汽车轴承领域的研发制造。近年来诺贝尔根据各行业的特性和需求，积极开发技术和研究，不断推出创新的技术和产品。

It is an international and global enterprise group company integrating design, development, manufacturing, sales and technical services. Products are mainly exported to Europe, North America, Australia, the Middle East, Asia Pacific and other regions. Nobel is committed to developing and consolidating cutting-edge technology in the field of mechanical drive systems and control systems. In particul

德国普威特等离子真空技术有限公司/ PVT Plasma und Vakuum Technik GmbH

3C9-020

Address: 德国 黑森-本斯海姆-德国本斯海姆市鲁道夫-狄塞尔街7号 Germany Hessen-Bensheim-Rudolf-Diesel-Str. 7 D-64625 Bensheim
Tel: 0451-86786201
Email: pvthrb@pvtvacuum.com
Web: www.pvtvacuum.com www.pvtvacuum.de

德国普威特等离子真空技术有限公司是当今世界上离子和等离子真空镀膜技术的引领者。PVT公司成立于1985年，距今已有30多年的历史。总部设在德国的本斯海姆市，靠近法兰克福。PVT公司设计、制造与销售真空涂层设备，研发涂层新技术、新工艺。生产最先进的工业化生产的真空镀膜系统，专门设计用于各种刀具、模具以及磨蚀部件表面沉积高性能的耐磨、防腐、防磨蚀等硬膜，如：AlCrN, AlCrSiN, AlTiSiN, AlCrN等以及其它的膜层。

PVT Plasma und Vakuum Technik GmbH, with its world headquarter in Bensheim, near Frankfurt, Germany, is a leader in the field of ion- and plasma-assisted vacuum coating technologies since 1985. PVT designs and manufactures vacuum coating system and develops coating processes for the most complex thin film applications in field of cutting tools,dies and molds as well as other products made of st

RMtech

3C9-021

Address: 德国 Germany Carl-Benz-Strase 9-11,67454
Tel: 18601651141
Email: michelle.yao@lux-mate.net
Web:

RM科技无纺布有限公司创建于1995年，自创立起一直致力于生产高质量的机械性，热学性和化学性的针刺无纺布。其产品满足汽车，轨道交通以及船舶行业对高阻燃防火产品的严格要求，并拥有高阻燃防火方面的最新技术和实现对客户定制化需求。

RM Technological Co., Ltd. was founded in 1995. Since its inception, it has been committed to producing high quality needle punched nonwovens with mechanical, thermal and chemical properties. Its products meet the strict requirements of automotive, rail transit and shipping industries for high flame ret

Giesecke & Devrient Asia Pacific Limited

4.1A1-002

Address: 香港地区 HongKong China Hong Kong-Flat/Rm 01-02 29/F Hysan Place 500 Hennessy Road Causeway Bay
Tel: 86-21-64272880
Email: zida.di@gi-de.com
Web: www.gi-de.com

Giesecke+Devrient is a global company that offers security technologies, both in the physical and digital world. Every day, billions of people benefit from G+D innovations in their personal and business lives. With around 11,600 employees across 32 countries, we develop, manufacture, and distribute products and solutions for the safeguarding of payment processes, identities, connectivity and data.

VERDIGRIS TECHNOLOGIES, INC.

4.1A1-006

Address: 美国 United States of America CA-Moffett Field-NASA Research Park M/S 19-1077
Tel: 18621545703
Email: wei.lu@ienergycn.com
Web:

Tool Gauge

3C9-023

Address: 美国 United States of America WA-Tacoma-4315 S Adams St
Tel: +1.253.473.2740
Email: slittle@toolgauge.net jlee@toolgauge.net
Web: toolgauge www.toolgauge.net

Tool Gauge is a world-class, award-winning manufacturer of complex, high value injection-molded aircraft interior components, molded structural components, and part assemblies (small to large, 3-4-5-axis, CNC metal and plastic parts with assembly fabrication). We bring superior value to our customer including Boeing, Diehl Aircabin, Safran, Triumph, Mitsubishi Heavy Industries (MHI) and more.

YSI Incorporated

4.1A1-004

Address: 美国 United States of America OH-Yellow Springs-1725 Brannum Lane, Yellow Springs, OH 45387
Tel: 010-57852250
Email: nancy.liu@xyleminc.com
Web: www.xylemanalytics.cn

YSI为赛莱默分析仪器旗下品牌，位于俄亥俄州黄温泉市，成立于1948年。YSI致力于设计制造革新的水质、流速及流量测定传感器。此外，还从事应用于场地及实验室取样、长期监测等相关仪器的制造。YSI生命科学部提供可信赖的产品，用于临床应用、生物分析以及生物燃料的生产及研究。 YSI, with its primary location in Yellow Springs, OH was built in 1948. YSI designs and manufactures innovative water quality, water velocity, and flow measurement sensors and instrumentation for sampling and long term monitoring applications in the field and laboratory. Our Life Sciences division offers clinical applications, bioanalytical instruments, trusted in critical bioprocess monitoring, as well as biofuel production and research.

Agfa NV

4.1A1-007

Address: 比利时 Belgium Mortsel-Septestraat 27
Tel: 86 21 24122000
Email: aspac.marcom@agfa.com
Web: www.agfa.com

罗德与施瓦茨公司 / ROHDE & SCHWARZ

4.1A1-001

Address: 德国 巴伐利亚-慕尼黑-Muehldorfstrasse 15, 81671 Germany Bavaria-Munich-Muehldorfstrasse 15, 81671
Tel: 8610-64312828
Email: yaqi.zhang@rohde-schwarz.com
Web: www.rohde-schwarz.com.cn

作为一家独立公司，罗德与施瓦茨凭借行业领先的专业技术发展成为可靠的合作伙伴，塑造了通信、信息和安全的未来发展。罗德与施瓦茨为各行各业、基础设施运营商和政府机构开发、生产和销售广泛的电子产品。作为一家独立公司，罗德与施瓦茨在所有业务领域发展成为技术与市场领导者，包括无线通信和射频测试与测量、广播电视与媒体、空中交通管制和军事无线电通信、网络安全以及网络技术。

Rohde&Schwarz develops, produces and markets a wide range of electronic capital goods for industry, infrastructure operators and government customers. It's among the technology and market leaders in all of its business fields, including wireless communications and RF test & measurement, broadcast and media, air traffic control and military radiocommunications, cybersecurity and network technology.

Elitech Technology, Inc

4.1A1-005

Address: 美国 United States of America 508 TOPHAM CT, MILPITAS,CA95035-4648 Milpitas
Tel: 18721361927
Email: shiyuachi@e-elitech.com
Web: www.e-elitech.com

Elitech Technology, Inc. based in Silicon valley, California, have accumulated 20 years of R & D and manufacturing experience in the field of temperature and humidity monitoring and control of the refrigeration industry.

HELUKABEL GmbH

4.1A1-008

Address: 德国 黑明根-斯图-德国 Germany Hemmingen-Stuttgart-Dieselstr。8-12 71282
Tel: 021-58693999
Email: info@helukabel.com.cn dean.ying@helukabel.com.cn
Web: www.helukabel.com/cn/home.html

HELUKABEL®和柔电缆 是世界领先的电缆生产和销售公司，产品范围涵盖各种电线、电缆、特种电缆、媒体电缆、电缆附件、数据、网络和总线电缆以及用于机器人和操纵系统的电缆保护系统。

HELUKABEL® is today one of Germany´s leading cable companies, boasting an extensive range of cables, wires, special cables, media technology, cable accessories, as well as Data, Network & Bus Technology and cable protection systems for robotics and handling systems.

Primetals Technologies Austria GmbH

4.1A1-009

Address: 奥地利 Austria Linz-Austria-Turmstrasse 44, 4031 Linz P.O. Box
Tel: 021 61963872
Email: xiaoxiao.ma@primetals.com
Web: www.primetals.com

普锐特冶金技术有限公司总部位于英国伦敦，是一家冶金行业全球领先的工程设计、工厂建设和全周期合作伙伴。公司提供全面的技术、产品及服务，包括整合电气、自动化和环境的解决方案，涵盖了钢铁产业链从原材料到成品的每一项环节，以及适用于有色金属领域的最新轧制解决方案。普锐特冶金技术是一家由三菱重工(MHI)与西门子组建的合资企业。三菱日立制铁机械株式会社(MHMM)和西门子分别持有合资公司51%和49%的股份。

Primetals Technologies, Limited headquartered in London, United Kingdom is a worldwide leading engineering, plant-building and lifecycle services partner for the metals industry. The company offers a complete technology, product and service portfolio that includes integrated electrics, automation and environmental solutions.

CRB Antriebstechnik GmbH

4.1A1-012

Address: 德国 Germany NRW-Leverkusen-Josefstr. 10
Tel: 00492143149970
Email: cai@crbantrieb.com
Web: www.crbantrieb.com

CRB was set up in Germany since 1998 and manufature the slewing bearings, bearings, machine parts and robotics. the factory in Leverkusen owns about 9400qm ground and 4800qm manufature area. we develop used Roboter of FANUC for it's new life and construct the Automation & digital manufacturing and consulte Business between China and Germany.

株式会社 日立制作所 / Hitachi, Ltd

4.1A2-003

Address: 日本 东京都千代田区丸之内一丁目6番6号 Japan 6-6, Marunouchi 1-chome, Chiyoda-ku, Tokyo, 100-8280
Tel: 010-65399136
Email: gaoj@hitachi.cn
Web:

DAPRO CORPORATION

4.1A1-010

Address: 美国 United States of America South San Francisco-South San Francisco-223 Lawrence Avenue South San Francisco CA 94080 USA
Tel: 021-54392095
Email: marketing@dapro.com.cn
Web: www.dapro.com.cn

DAPRO Corporation公司成立于1995年，公司重点引进高品质的工业在线监控仪器仪表，特别是有关工业锅炉监控仪器，高温优化燃烧监控仪器，烟气排放在线监控仪器仪表。为中国客户提供最专业的售前售后服务，以及工业流测量技术解决方案。更致力于推动各行业超低排放改造，提高能源利用效率，节能降耗，降低整体运行成本。

DAPRO Corporation was founded in 1995. The company focuses on introducing high-quality industrial on-line monitoring instruments, especially those related to industrial boilers, high temperature combustion monitoring instruments, and flue gas emission on-line monitoring instruments.

Emerson

4.1A2-001

Address: 美国 United States of America Missouri-St. Louis-8000 West Florissant Avenue
Tel: 86-21-33387010
Email: kevin.ding@emerson.com
Web: www.emerson.cn

佳能集团 / CANON INC.

4.1A2-004

Address: 日本 东京都-京都大田区下丸子3-30-2 Japan 30-2, Shimomaruko 3-chome, Ohta-ku, Tokyo 146-8501
Tel: 010-85139490
Email: mingwen_li@canon.com.cn
Web: www.canon.com.cn www.canon.com.cn/about

佳能公司自1937年创业以来，始终秉承"共生"的企业理念，以创造世界一流产品为奋斗目标，向多元化和全球化发展。目前，佳能的事业以光学技术为核心，涵盖了影像系统产品、办公产品以及产业设备等广泛领域。位于东京的集团总部与美洲、欧洲、亚洲和大洋洲的各区域总部紧密联系，构筑了全球化与本土化有机结合的经营体制。

Canon, seeking to become a truly excellent company that is admired and respected around the world, lauched themedium-to-long-term Excellent Global Corporation Plan in 1996 and has successfully completed the first phases of this plan. In Phase V, we are implementing seven key strategies as we embrace the challenge of new growth through a grand strategic transformation.

ENGIE Deutschland GmbH

4.1A1-011

Address: 德国 Germany Aachener Str.1044,50858 Cologne, Germany
Tel: 01085327873
Email: xianhai.peng@engie.com
Web:

Heraeus Group

4.1A2-002

Address: 德国 Hanau-Heraeus Street No. 12-14 Germany Hanau-No. 12-14, Heraeus Street
Tel: 201-33575261
Email: kevin.chen@heraeus.com
Web: www.heraeus.com

A globally leading technology group, Heraeus is headquartered in Hanau, Germany. Founded in 1851, it is a family-owned portfolio company which traces its roots back to a pharmacy opened by the family in 1660. Today, Heraeus combines businesses in the environmental, energy, electronics, health, mobility and industrial applications sectors.

Dell Inc;

4.1A2-005

Address: 美国 德州-奥斯汀-奥斯汀 United States of America State of Texas-Austin-Austin
Tel: 01058261440
Email: xiaoning_jin@dell.com
Web: delltechnologies.com

TOSHIBA

4.1A3-001

Address: 日本 Japan Tokyo-1-1 Shibaura 1-Chome, Minato-Ku
Tel: 010-85316888
Email: zhangxia@toshiba.com.cn
Web: www.toshiba.co.jp worldwide/index.html

株式会社不二越 / NACHI-FUJIKOSHI CORP.

4.1B1-001

Address: 日本 东京-都港区东新桥1-9-2 汐留住友大楼17F Japan Tokyo 105-0021-Shiodome Sumitomo Bldg.17F,1-9-2 Higashi-Shinbashi, Minato-ku
Tel: 021-69152200
Email: nschp-inq-rb@nachi.com.cn
Web: www.nachi.com.cn www.nachi-fujikoshi.co.jp

那智不二越(NACHI)成立于1928年，以在机械加工事业，工业机器人事业、功能零部件事业，材料事业的四大事业方面所积累的技术为基础，充分发挥综合机械制造商的优势，为制造业领域的发展作出了卓越贡献。通过不断丰富精度高、功能强、可靠性优异的各系列产品，并提供技术工程服务，努力打造全世界所喜爱的NACHI品牌。

NACHI-FUJIKOSHI was founded in Toyama,Japan in 1928. Through complex and linked Nachi business:「Machining Business」with machine tools and the like;「Robot Business」with industrial robots;「Functional Components Business」with bearings, hydraulic equipment and the like;「Materials Business」with materials and heat treatment, NACHI "Contributes to the development of the world of product manufacture."

江森自控 / Johnson Controls International Plc.

4.1B1-004

Address: 美国 威斯康辛州-密尔沃基市-绿色海湾大街5757号 United States of America Wisconsin 53201-Milwaukee-5757 N. Green Bay Ave. P.O. Box 591
Tel: 021 2285 6425 +86 21 2285 6425
Email: leon.li@jci.com
Web: www.johnsoncontrols.com

江森自控是全球领导企业，致力于创造一个安全、舒适和可持续发展的世界。我们的105000名员工倾力打造智慧建筑、高效能源解决方案和集成的基础设施配套，在全球150个国家积极实践建设智慧城市和社区的承诺。

Johnson Controls is a global leader creating a safe, comfortable and sustainable world. Our 105,000 employees create intelligent buildings, efficient energy solutions, and integrated infrastructure that work seamlessly together to deliver on the promise of smart cities and communities in 150 countries.

富士胶片株式会社 / Fujifilm Corporation

4.1A3-002

Address: 日本 东京-東京都港区赤坂9-7-3 Japan Japan-Tokyo-7-3, Akasaka 9-chome, Minato-ku
Tel: 021-50106000-159
Email: shengyin.liu@fujifilm.com
Web: www.fujifilm.com

富士胶片集团成立于1934年，总部位于日本东京，现年销售额约220亿美元，营业利润约19亿美元，全球联结子公司279家，员工7.2万余名，重点业务涵盖高性能材料、医疗健康、电子影像、光学镜头、印艺系统、文件处理六大领域，运用自主研发的光线控制、材料控制、图像信息处理和细胞处理技术等尖端核心技术，不断推出更前沿、更环保的高性能材料。

Fujifilm Group was founded in 1934 and is headquartered in Japan. It has annual sales of approximately $22 billion, 279 global subsidiaries and over 72,000 employees. The key business includes six fields such as healthcare, highly functional materials, digital imaging, optical devices, graphic systems, and document solution.

爱斯佩克株式会社 / ESPEC Crop.

4.1B1-002

Address: 日本 大阪-北区天神桥三丁目5番6号 Japan Osaka-3-5-6, Tenjinbashi, Kita-ku
Tel: (+86 21) 5103667
Email: lujun@espec.cn
Web: www.espec.co.jp

爱斯佩克集团成立于1947年，从日本到世界，70余年来致力于环境可靠性试验仪器的研发、制造和销售，铸就了品质卓越、技术精良的品牌形象。爱斯佩克集团的环境试验仪器，可以准确可靠地再现温度、湿度及气压等各种气候环境，用于评估产成品和零部件在各种气候环境下的可靠性，提供各类环境设备、在线检测设备、新能源用设备、汽车整车用设备、植物生产系统等，为客户建立世界水平的可靠性评估体系提供最佳方案。

Established in 1947, Especk Group has devoted more than 70 years to R&D, manufacture and sales of environmental reliability testing instruments from Japan to the world, creating a brand image of excellent quality and excellent technology. The environmental test instrument of Espec Group can accurately and reliably reproduce various climatic environments, such as temperature, humidity and pressure.

三菱电机株式会社 / Mitsubishi Electric Corporation

4.1B2-001

Address: 日本 东京-都千代田区丸之内2-7-3 Japan TOKYO-Chiyoda Ku-Marunouchi
Tel: 021-52082030-131
Email: lubeiyu@china.meap.com
Web: www.mitsubishielectric.co.jp

三菱电机拥有近百年的发展历史，在通过保证品质回馈社会，奉献社会的经营理念下，作为环保先进性企业始终坚持开发、制作、销售值得广大用户信赖的产品和系统。三菱电机集团带来的四大解决方案更是企业多年发展过程中培养，积累的技术力，综合力的充分体现。品质生活、智能制造、睿捷出行、智慧城市四大解决方案，从家电、工业自动化、交通、电梯楼宇等方面着手、旨为人们的生活更加便捷，贡献于社会。

Mitsubishi Electric is one of the world's leading names in the manufacture and sales of electrical and electronic products and systems used in a broad range of fields and applications.As a global, leading green company, we're applying our technologies to contribute to society and daily life around the world.

株式会社安川电机 / YASKAWA Electric Corporation

4.1A3-003

Address: 日本 Yahatanishi-ku-北九州市-北九州市八幡西区黒崎城石2番1号 Japan Yahatanishi-ku-Kitakyushu-2-1 Kurosakishiroishi, Yahatanishi-ku, Kitakyushu 806-0004 Japan
Tel: 53852200
Email: miwa.takuya@yaskawa.com.cn
Web: www.yaskawa.com.cn

安川电机(中国)有限公司成立于1999年4月，主要负责安川品牌的机器人、伺服电机、控制器、变频器等机电一体化产品在中国国内的销售；智能工厂整体解决方案的提供；以及相关业务的售后服务及技术咨询等。此次展出了小型机器人MOTOMINI、多功能通用型机器人GP系列、小型控制柜YRC1000MICRO以及变频器产品GA700和CH700。适用于在3C市场中研磨、组装、搬运、检测等方面的应用。

YASKAWA ELECTRIC, since its establishment in 1915, has always been the leading business of age by transforming itself from "YASKAWA as a motor manufacturer", "YASKAWA as an automation company" to "YASKAWA as a mechatronics company", based on its management philosophy of "contributing to the evolution of society through the performance of its business." We are committed to push the further evolutio

Schneider Electric / Schneider Electric

4.1B1-003

Address: 法国 France Hauts de Seine-RUEIL MALMAISON-RUEIL MALMAISON (HIVE), 35 rue Joseph Monier
Tel: 021-60657552
Email: fangling-jimmy.zhao@se.com
Web:

通用电气 / General Electric

4.1B2-002

Address: 美国 United States of America Boston
Tel: +86 021 38773089
Email: yidan.wu@ge.com
Web:

Asea Brown Boveri Ltd

4.1B3-001

Address: 瑞典 Sweden Affolternstrasse 44
Tel: 01064236688
Email: may-shuping.lan@cn.abb.com
Web: new.abb.com/cn/ www.abb.com

ABB is a pioneering technology leader with a comprehensive offering for digital industries. With a history of innovation spanning more than 130 years, ABB is today a leader in digital industries with four customer-focused, globally leading businesses: Electrification, Industrial Automation, Motion, and Robotics & Discrete Automation, supported by its common ABB Ability™ digital platform.

Honeywell International Inc

4.1B3-002

Address: 美国 United States of America NC-Charlotte-300 S. Tryon St, Suite 500 / 600
Tel: +862180389131 +862180389131
Email: Robert.Xu@Honeywell.com
Web: honeywell.com

Honeywell is a Fortune 500 company that delivers hi-tech solutions ranging from aerospace; control technologies for buildings and industry; performance materials; and as well as internet of things. All Honeywell businesses are represented in China, with its AP HQ in Shanghai. It has over 50 wholly owned enterprises and JVs in over 30 cities across the country, including 20+ manufacturing sites.

陶氏公司 / DOW

4.1B3-003

Address: 美国 密歇根州-米德兰-陶氏公司 United States of America Michigan-Midland-Global Dow Center
Tel: +86 10 85279110 +86 10-85279110
Email: yqin@dow.com
Web: www.dow.com

作为世界领先的材料科学公司，陶氏公司为包装、基础设施、消费者护理等高增长市场的客户提供品类广泛的、基于科技的差异化产品和解决方案。
As the leading materials science company in the world, Dow delivers a broad range of differentiated science-based products and solutions for our customers in high-growth segments, such as packaging, infrastructure and consumer care.

拉法基豪瑞 / LafargeHolcim

4.1B3-004

Address: 法国 France 6300 Zug-Grafenauweg 10-Holcim Group Services Ltd
Tel: 18876416625
Email: chun-qing.wang@lafargeholcim.com
Web: www.lafargeholcim.com

拉法基豪瑞集团是全球建材行业的领军企业，为客户提供丰富的建筑材料及施工方案，其业务覆盖水泥、骨料、预拌混凝土和创新解决方案及产品（预制件、沥青、砂浆等），可用于经济适用房、小型本地项目和基础设施项目。
LafargeHolcim is the leading global building materials and solutions company serving masons, builders, architects and engineers all over the world. Our operations produce cement, aggregates and ready-mix concrete which are used in building projects ranging from affordable housing and small, local projects to the biggest, most technically and architecturally challenging infrastructure projects.

杜邦公司 / DuPont

4.1B3-005

Address: 美国 United States of America Delaware-Wilmington-Chestnut Run
Tel: 02120589010
Email: jessica.xu@dupont.com
Web: www.dupont.com

杜邦公司提供以科技为基础的材料、原料和解决方案，致力于成为全球创新推动者之一，为各行各业和人们的日常生活带来革新。我们的员工运用多样化的科学技术和专业经验，协助客户推进他们的创意，在电子、交通、建筑、水处理、健康和保健、食品和工作防护等关键市场提供必要的创新。
DuPont is a global innovation leader with technology-based materials, ingredients and solutions that help transform industries and everyday life. Our employees apply diverse science and expertise to help customers advance their best ideas and deliver essential innovations in key markets including electronics, transportation, construction, water, health and wellness, food, and worker safety.

Signify / Signify NV

4.1B4-001

Address: 荷兰 Netherlands Eindhoven-5656 AE Eindhoven-High Tech Campus 48
Tel: Mobile: +86 13501225 +86 21 3414 8152
Email: christopher.wu@signify.com yiming.shou@signify.com
Web: www.signify.com/zh-cn

Signify (Euronext: LIGHT) is the world leader in lighting for professionals and consumers and lighting for the Internet of Things. Our Philips products, Interact connected lighting systems and data-enabled services, deliver business value and transform life in homes, buildings and public spaces. We unlock the extraordinary potential of light for brighter lives and a better world.

Ingersoll Rand

4.1B4-002（001）

Address: 美国 United States of America North Carolina-Davidson-Suite D, 800 Beaty Street
Tel: 021-22216000
Email: june.luo@irco.com
Web: company.ingersollrand.com

英格索兰(Ingersoll Rand，纽约证券交易所代码：IR)通过创造舒适、可持续发展及高效的环境来全面改善生活质量。我们的员工和旗下品牌：Club Car®、英格索兰(Ingersoll Rand®)、冷王(Thermo King®)和特灵(Trane®)共同致力于改善民用住宅和楼宇建筑的空气品质及舒适度，运输和保护食品及其他易腐品安全，并提高工业领域的生产率和效率。
Ingersoll Rand advances the quality of life by creating comfortable, sustainable and efficient environments. Our people and our family of brands — including Club Car®, Ingersoll Rand®, Thermo King® and Trane®—work together to enhance the quality and comfort of air in homes and buildings, transport and protect food and perishables, and increase industrial productivity and efficiency.

英格索兰 / Ingersoll Rand

4.1B4-002（002）

Address: 美国 United States of America 800-E Beaty Street, Davidson, NC
Tel: 021-22215063
Email: Lizzy.Fan@irco.com
Web: www.irco.com.cn

英格索兰(Ingersoll Rand，纽约证券交易所代码：IR)通过创造舒适、可持续发展及高效的环境来全面改善生活质量。我们的员工和旗下品牌：Club Car®、英格索兰(Ingersoll Rand®)、冷王(Thermo King®)和特灵(Trane®)共同致力于改善民用住宅和楼宇建筑的空气品质及舒适度，运输和保护食品及其他易腐品安全，并提高工业领域的生产率和效率。作为年销售额逾150亿美。
Ingersoll Rand(NYSE:IR) advances the quality of life by creating comfortable, sustainable and efficient environments. Our people and our family of brands — including Club Car®, Ingersoll Rand®, Thermo King® and Trane®—work together to enhance the quality and comfort of air in homes and buildings, transport and protect food and perishables, and increase industrial productivity and efficiency.

MagnaDrive Coprporation / MagnaDrive Corporation

4.1B4-003

Address: 美国 WA-Woodinville-14660 NE North Woodinville Way United States of America WA 98072-Woodinville-14660 NE North Woodinville Way, Suite 100
Tel: +1 (425) 463-4731
Email: gharmon2490@gmail.com gharmon@magnadrive.com
Web: www.magnadrive.com

MagnaDrive couplings and Speed Drives replace the physical connection between motor and load with a gap of air. This air gap eliminates harmful vibration, wear and tear, enhances energy efficiency, increases motor life and protects equipment from overload damage. Some of the features and benefits of this technology include: MagnaDrive's revolutionary disconnected torque-transfer technology.

日本康肯工程技术邮箱公司 / Kanken Techno Co.,LTD

4.1B4-004

Address: 日本 京都长岗京市神足太田30-2 Japan 30-2 Ota Kotari, Nagaokakyo, Kyoto, Japan
Tel: 021-61253711/12
Email: s-matsushima@kanken-techno.co.jp
Web: www.kanken-techno.co.jp/i/index.html

Kanken致力于工厂排放有害气体处理设备的研发、设计、制造、销售及服务。主要产品有KPL系列，VOC系列等。
Kanken Technohas always been concentrating on developing and manufacturing equipment to abate hazardous gases resulting from LSI,LCD,LED and PV industries, as well as greenhouse gases and VOC emissions.The main products are KPL series, VOC series etc.

诺基亚 / NOKIA

4.1B4-005

Address: 芬兰 Finland Karaportti 3, 02610 Espoo, FINLAND
Tel: 50554550
Email: wenqi.lin@nokia-sbell.com
Web: www.nokia.com

诺基亚是创新互联世界核心技术的全球领导者。凭借诺基亚贝尔实验室的研究与创新，诺基亚利用产业最全面的端到端产品、服务和授权平台，服务于通信服务提供商、政府部门、大型企业和消费者。诺基亚恪守最高商业道德标准，坚持诚信经营，以高品质的技术创新服务社会。我们致力于通过打造5G与物联网基础设施来改善人类体验。
We create the technology to connect the world. We develop and deliver the industry's only end-to-end portfolio of network equipment, software, services and licensing that is available globally. Our customers include communications service providers whose combined networks support 6.1 billion subscriptions, and enterprises that use our network portfolio to increase productivity and enrich lives.

欧姆龙株式会社 / OMRON Corporation

4.1B5-001

Address: 日本 京都府-京都市-下京区塩小路通堀川東入 Japan Kyoto-Kyoto-hiokoji Horikawa, Shimogyo-ku
Tel: 021-58881666
Email: ciie2019@gc.omron.com
Web: www.omron.com.cn

创立于1933年的欧姆龙集团是全球知名的自动化控制及电子设备制造厂商，掌握着世界领先的传感与控制核心技术。通过不断创造新的社会需求，欧姆龙集团已在全球拥有超过35,000名员工，营业额达8,595亿日元。产品涉及工业自动化控制系统、电子元器件、汽车电子、社会系统、健康医疗设备等广泛领域，品种多达数十万种。

Watergen

4.1B5-002

Address: 以色列 Israel Petach Tikva-Granit 2
Tel: +972-3-9416861
Email: shlomith@watergen.com
Web: www.watergen.com

Founded in 2009, Watergen has devoted its innovative technology towards solving the world's water crisis under the leadership of its president, Dr. Michael Mirilashvili. Watergen provides a game-changing water-from-air solution based on its proprietary patented GENius technology that uses humidity in the air to create clean and fresh drinking water to people everywhere.

Clean Water Technology, Inc.

4.1B6-001

Address: 美国 United States of America CA 90061-Los Angeles-151 W. 135th Street
Tel: 021-69756937
Email: colin@cleanwatertech.cn
Web: www.cleanwatertechnology.com

Clean Water Technology, Inc.（CWT）是一家全球范围内提供污水处理解决方案的公司，专注于从事撬装集成式处理系统.作为废水处理技术创新者，CWT 的产品以高效率、可持续性、易操作性和灵活性涵盖水和废水处理的整个领域.
Clean Water Technology, Inc. (CWT), a global provider of water and wastewater treatment solutions, specializes in skid-mounted and packaged treatment systems. An innovator in wastewater technology, CWT's products cover the entire realm of water and wastewater treatment with the highest degree of efficiency and sustainability as well as easy operability and flexibility.

Famed ywiec Sp. z o.o.

4.1B6-002

Address: 波兰 Poland ywiec-Fabryczna 1 str.
Tel: +48698614383
Email: m.babiuch@famed.com.pl
Web: www.famed.com.pl

Famed ywiec is a leading European manufacturer of high quality medical equipment. In over 70 years we have supplied medical facilities with thousands of top-quality operating tables, hospital beds, treatment chairs and other equipment.

億達動力科技有限公司 / E-Tech Dynamic Technology Co.Ltd.

4.1B6-003

Address: 香港地区 香港新界白石角香港科學園二期東尚湖樓3樓312室內 Hong Kong Unit 312, 3/F, Lakeside 1, Phase 2, Hong Kong Science Park, Pak Shek Kok, New Territories, Hong Kong
Tel: +852 2117 1337
Email: eric@et-dt.com
Web:

億達是一家研發創新科技的公司，主要業務是電動貨車的研發，同时也在不断开拓海外创新科技與醫療設備產品。
Our corporation was established in 2014 and has a long-term ambitious goal. We hope to tailor make the required electric vehicles through market latitude and back-end demand. Considering the market demand, we will establish a large customer group, inciting the traditional automotive industry business model, and creating a new "Internet+" business system.

DISCO Corporation

4.1C1-001

Address: 日本 Japan Tokyo-13-11 Omori-Kita 2-chome, Ota-ku, Tokyo 143-8580 Japan
Tel: 021-50278018
Email: fiona_fang@discosha.com Ohayomomo@me.com
Web: www.disco.co.jp/eg/index.html

冈谷钢机株式会社 / OKAYA & CO.,LTD.

4.1C1-002

Address: 日本 爱知县-名古屋市-中区荣二丁目4番18号 Japan Aichi-Nagoya-4-18,Sakae 2-chome,Naka-ku
Tel: 0081+3-3214-8721
Email: kojimasy@okaya.co.jp
Web: www.okaya.co.jp

创立1669年(宽文9年)设立1937年(昭和12年)　注册资金91亿28百万日元业务内容钢铁、特殊钢、非铁金属、电机及电子元件、化工产品、机械及工具、管道住房设备、建筑相关、食品等的国内销售、进出口（包括三国之间的交易），正通过冈谷钢机集团的全球网络多方面展开。
Engages in the Japan-based sale, exporting, and importing (including three-country transactions) of products in a multifaceted manner via the global network of the Okaya Group. These products include iron and steel, special steel, non-ferrous metals, electrical and electronic parts, chemical products, machinery and tools, piping and housing equipment, construction-related items, and food products.

YANMAR CO.,LTD

4.1C1-003

Address: 日本 Japan OSAKA,-CHAYAMACHI,KITA-KU-YANMAR FLYING-Y BUILDING1-32
Tel: 021-23120610
Email: ting_xu@yanmar.com
Web: www.yanmar.com

EnerSys Delaware Inc.

4.1C1-006

Address: 美国 United States of America PA 19605-Reading-P.O. Box 14145 2366 Bernville Road
Tel: 13321181620
Email: Allen.huhe@enersys.com.cn
Web: www.enersys.com

美国艾诺斯(EnerSys)集团具备一百多年的电池制造经验和技术，总部位于美国宾夕法尼亚州雷丁市,在瑞士和新加坡分别设有欧洲及亚洲地区总部。艾诺斯集团在全球拥有完善的生产、销售和服务网络，拥有30多个制造及组装工厂，在全球100多个国家为超过10000多个行业用户提供工业用储能解决方案的设计、制造、安装和维护服务。
EnerSys is the global leader in stored energy solutions for industrial applications. We manufacture and distribute reserve power and motive power batteries, battery chargers, power equipment, battery accessories and outdoor equipment enclosure solutions to customers worldwide.

KOHLER Co.

4.1C2-003

Address: 美国 United States of America Wisconsin-Kohler-444 Highland Drive
Tel: 021 26062962
Email: angeline.zhang@kohler.com.cn
Web:

科勒，美国厨卫品牌。创立于1873年的美国科勒(Kohler)公司是迄今美国最庞大的家族企业之一，总部位于威斯康辛州。其业务和企业遍布各地，涉足美国、加拿大、澳大利亚、中国、德国、印度、泰国等，业务包含厨卫、家具及内部装饰系列、备用发电机及动力系统，以及酒店和世界级高尔夫球场。
Founded in 1873 and headquartered in Kohler, Wisconsin, Kohler Co. is one of America's oldest and largest privately held companies comprised of nearly 37,000 associates. With more than 50 manufacturing locations worldwide, Kohler is a global leader in the design, innovation and manufacture of kitchen and bath products; engines and power systems; luxury cabinetry and tile

伯特利工业设备有限公司 / Birtley Industrial Equipment Corporation

4.1C1-004

Address: 美国 肯塔基州-莱克星顿市-创新路2333号 United States of America KY40511-Lexington-2333 Innovation Drive
Tel: 0533-2151751
+18597211740
Email: xie_chunbing@borun.com.cn
xie_chunbing@borunc.com.cn
Web: www.birtley.com.cn

美国伯特利是目前美国少数专注于清洁技术工艺与装备研究的公司之一。核心装备为热等离子体技术及装备，主营业务包括化工、矿业、市政等行业的固体与液体废物的处置与资源化利用，包括高盐废水、等离子气化、干化、脱水、破碎和筛分设备制造以及工艺系统集成。同时，2016年全球清洁技术峰会中，伯特利公司的工业废水与工业废渣处置系统同时入选"2016全球清洁技术峰"百项优秀清洁技术。

Leonardo S.p.A.

4.1C2-001

Address: 意大利 Italy Roma-Piazza Monte Grappa, 4-00195 Roma
Tel: (+86) 021-68818837
Email: caoting@helibuy.com.cn
Web:

福禄克测试仪器(上海)有限公司 / Fluke Corporation

4.1C2-005

Address: 美国 华盛顿-埃弗里德-6920 Seaway Blvd United States of America Washington-Everett-6920 Seaway Blvd
Tel: 13520722520
Email: qianqian.liu@fluke.com
Web: www.fluke.com.cn

福禄克公司成立于1948年，是世界电子测试工具的佼佼者，多年来，创造和发展了一个特定的技术市场，为各个工业领域提供了优质的测量和检测故障产品。福禄克的用户涵盖面广，包括技术人员、工程师、计量人员等等，他们利用福禄克的测试工具进行工业用电、电器设备和过程校准的安装、故障诊断和管理，并以此控制质量。
Founded in 1948, Fluke Corporation is the world leader in compact, professional electronic test tools and software for measuring and condition monitoring. Fluke customers are technicians, engineers, electricians, maintenance managers, and metrologists who install, troubleshoot, and maintain industrial, electrical, and electronic equipment and calibration processes.

KROHNE

4.1C1-005

Address: 德国 Germany Duisburg-Ludwig-Krohne-Str.5
Tel: 021-33397233
Email: k.wu@krohne.com
Web: www.krohnechina.com

KROHNE ranks among the world's leading companies involved in the development and production of innovative and reliable process measuring technology, providing solutions for all sectors around the globe. Besides, KROHNE also provides commission, calibration and maintenance services. KROHNE was founded in 1921 in Germany and has 17 production facilities and owns 45 companies and joint ventures.

CHAMPION POWER EQUIPMENT, INC

4.1C2-002

Address: 美国 United States of America California-Santa Fe Springs-12039 Smith Ave
Tel: 0571-86036151
Email: fisher@zjcpeauto.com
Web: www.championpowerequipment.com

Creaform Inc.

4.1C2-006

Address: 加拿大 Canada QC-Lévis-4700 rue de la Pascaline
Tel: 021-60905288
Email: vivian.wang@ametek.com
Web: www.creaform3d.com

总部位于加拿大魁北克省莱维斯市，Creaform开发、制造并销售3D便携式及自动化测量技术产品，专门从事工程服务。公司提供创新应用解决方案，如3D扫描、逆向工程、质量控制、无损检测、产品开发和数值模拟 (FEA/CFD)。公司的产品和服务面向各大行业，例如汽车、航空航天、消费品、重工业、医疗保健、制造业、石油与天然气、发电业以及研究与教育。
Creaform, as a part of Ametek Inc., has its headquater in Levis, Canada. It develops, manufactures, and sells 3D portable and automated measurement technologies and specializes in engineering services. The company offers innovative solutions for applications such as 3D scanning, reverse engineering, quality control, non-destructive testing, product development, and numerical simulation (FEA/CFD).

波音公司 / The Boeing Company

4.1C3-001

Address: 美国 伊利诺伊州-芝加哥-100 North Riverside, Chicago, Illinois 60606 United States of America Illinois -Chicago-100 North Riverside, Chicago, Illinois 60606
Tel: 206.766.1116
Email: robert.c.bernicchi@boeing.com
Web: www.boeing.com

波音公司是全球最大的航空航天业公司。波音与中国的合作已长达47年。自1972年以来，波音一直是服务于中国民航运输业发展的忠实合作伙伴，支持中国建立并发展安全、高效、盈利的航空系统，以匹配中国经济快速增长的步伐。波音持续拓展与中国坚实的、创新的合作伙伴关系，涵盖飞机制造与运营的全生命周期，包括零部件与组件的生产、飞机完工和交付、飞机改装与维修以及航空服务等。
Boeing has a long-standing partnership with China spanning more than 47 years. In 1972, the historical visit by President Richard Nixon to China led to the introduction of Boeing aircraft to this market. Today, Boeing jets are the mainstay of China's air travel and cargo system. China has a component role on every current Boeing commercial airplane model—the 737, 747, 767, 777 and 787 Dreamliner.

Olivotto Glass Technologies S.p.A.

4.1C3-004

Address: 意大利 Italy Torino-Avgliana-Viale Gandhi 22
Tel: 0119343511
Email: fabrizio.bonsignore@olivotto.it
Web: www.olivotto.it

We develop, design and manufacture machineries and services for hollow glass. Last entry: complete plants for the production of Glass Wool and glassware automatic packaging line.The Excellence in Pharma Packaging, thanks to our Tubing Lines for Neutral Glass Tube production.

KION Group AG

4.1C4-001 (002)

Address: 德国 Germany Frankfurt am Main-Frankfurt am Main-Thea-Rasche-Strasse 8
Tel: 0592-5533215
0086-592-5533215
Email: wenwu.li@linde-china.com
Web: www.kiongroup.com

The KION is a global leader in industrial trucks, related services and supply chain solutions. Across more than 100 countries worldwide, the KION Group's logistics solutions optimise the flow of material and information within factories, warehouses and distribution centres.

Quest Aircaft Company

4.1C3-002

Address: 美国 United States of America Idaho-Sandpoint-1200 Turbine Drive
Tel: 15957808536 / 400-004-8528
Email: ywx@sv-aircraft.com
Web: questaircraft.com

Quest Aircraft Company was founded in the Pacific Northwest with a mission — to design and produce the next generation of short takeoff and landing aircraft capable of bringing services and heavy supplies to the most remote regions on the planet. Quest introduced its first aircraft, the Kodiak 100, in 2007.

RODMAN POLYSHIPS S.A.U

4.1C3-005

Address: 香港地区 HongKong China SHEUNG WAN-7/F KIN ON COMM BLDG 49-51 JERVOIS ST
Tel: 0086-021-64913300
Email: info@orpc.com.cn
Web:

法拉帝集团 / FERRETTI SPA

4.1C4-001 (003)

Address: 意大利 Italy FC-Forli-Via Ansaldo 5/7
Tel: 021-63735258
Email: infoapac@ferrettigroup.com
Web: www.ferrettigroup.com

法拉帝FSD公务舰艇部隶属意大利法拉帝集团，专业从事各类高标准公务应用舰艇的设计、生产、销售和服务。在意大利乃至全球多个国家，法拉帝公务舰艇部都作为重要伙伴，为海军、海警、边防等组织或机构提供着重要支持。凭借法拉帝集团强大的设计能力、长久的品质追求和精湛的造船工艺，公务舰艇部可以为客户提供多品类专业船艇解决方案。
Ferretti Security Division is the Ferretti Group business unit specializing in the design, production and sale of state-of-the-art naval platforms for security applications. FSD is a key player supporting navies, coastguards, police, and patrol forces around the globe, offering professional vessels made of hybrid glass and carbon fibres.

三菱综合材料株式会社 / Mitsubishi Materials Corporation

4.1C3-003

Address: 日本 东京都-千代田区-丸之内3-2-3 Japan Tokyo-Chiyoda-ku-3-2-3, Marunouchi
Tel: 021-6289-6333
+86-(0)21-6289-6333
Email: rjzhang@mmc.sh.cn
Web: www.mmc.co.jp/corporate/zh/
www.mmc.co.jp/corporate/en

三菱综合材料集团作为一家多元化的材料生产商，竭诚为全世界提供不可或缺的基础材料，继而"造福人类、造福社会、造福地球"。
As a diversified materials manufacturer, the Mitsubishi Materials Group has strived to work "For People, Society and the Earth" through the supply of basic materials indispensable to the world.

Linde Hydraulics GmbH&Co.KG

4.1C4-001 (001)

Address: 德国 Germany Bayern-63741 Aschaffenburg-Wailandtstrasse 13
Tel: +86-536-5075293
Email: zhaoc@weichai.com
Web: www.linde-hydraulics.com

Linde Hydraulics which was founded in 1904, is based in Aschaffenburg, Germany.We are represented in more than 50 countries by a strong network of around 80 sales and service partners.Our product range comprises hydraulic pumps and motors, valves, electronic controls and peripheral devices.

Power Solutions International Inc.

4.1C4-001 (004)

Address: 美国 United States of America IL 60191-Wood Dale-201 Mittel Drive
Tel: 0536-8273850
Email: wuhl@weichai.com
Web: www.psiengines.com

Power Solutions International (PSI) 是一家领先的清洁发动机技术制造商和工业和公路动力解决方案供应商。PSI为工业，建筑，农业和公路市场的OEM提供动力总成解决方案，并提供排量从0.97升到22升全系列的多种燃料、低排放发动机。
Power Solutions International (PSI) is a leading cleantech manufacturer and supplier of industrial and on-road engine and power solutions. PSI provides integrated, turnkey power solutions to original equipment manufacturers in the industrial, construction, agricultural, and on-road markets and offers a complete line of fuel-flexible, low-emission engines ranging from .97 liters to 22 liters

Dematic

4.1C4-001（005）

Address: 美国 United States of America Atlanta, GA 30326 -3550 Lenox Road NE-Three Alliance Center
Tel: +86 21 60862898
Email: joyce.xu@dematic.com
Web: www.dematic.cn

Dematic is a leading supplier of integrated automated technology, software and services to optimize the supply chain. Dematic employs over 7,000 skilled logistics professionals to serve its customers globally, with engineering centers and manufacturing facilities located around the world.

AVANCIS GmbH

4.1C4-003（001）

Address: 德国 Germany Solarstraße-Torgau-3,04860
Tel: 010-68139387
Email: zxw@cnbm.com.cn
Web: www.avancis.de/en/company

AVANCIS GmbH is driving the shift to a global energy supply from renewable energy sources through innovation, globalization and the latest CIGS technology. German manufacturer of thin-film solar panels for aesthetic solar solutions. SKALA - premium solar module for architectural building projects

envitec-k UG

4.1C5-003

Address: 德国 Germany NRW-Duesseldorf-Dreischeibenhaus 1
Tel: 004921188250305
Email: info@envitec-k.com
Web:

Envitec-k limited is a German project develop & an equipment suppling company-in the field of environmental technologies. The company was founded to provide the best available solutions to many waste management challenges and other environmental related projects. Envitec-k limited has his headquarter in Duesseldorf/Germany. In addition, the company has its own production facility in Haining/China.

博杜安国际发动机有限公司 / SOCIETE INTERNATIONAL DES MOTEURS BAUDOUIN

4.1C4-001（006）

Address: 法国 Bouches-du-Rhône-Cassis-Technoparc du Brégadan France Bouches-du-Rhone-Cassis-Technoparc du Bregadan
Tel: +33 631138118
Email: steven.wang@baudouin.com
Web: www.baudouin.com

法国博杜安国际发动机公司成立于1918年，是法国一家具有百余年历史的最大的船用发动机及动力系统供应商，主要从事发动机及船舶动力系统制造与销售，主打产品为M 系列（包括6、8 及12 缸M26.2；6及12缸M26.3；6及12缸M33）及W系列船用发动机，以及包括齿轮箱、船轴、螺旋桨在内的全套船舶推进系统；2017年新推出了17-1900千伏安的发电单机业务。
Founded in 1918, Baudouin international engine company of France is the largest Marine engine and power system supplier in France with a history of more than 100 years,it is mainly engaged in engine and ship power system manufacturing and sales，the main products are M series and W series Marine engines, as well as a full set of ship propulsion system including gear box, ship shaft and propeller.

德国新格拉斯科技集团 / SINGULUS TECHNOLOGIES AG

4.1C4-003（002）

Address: 德国 Germany Kahl am Main-Hanauer Landstrasse 103
Tel: 61073997
Email: xiaowei.lu@singulus.cn
Web: www.singulus.de

安百拓香港有限公司 / Epiroc Hongkong Limited

4.1C5-004

Address: 香港地区 香港-新界沙田鄉-事會路138號新城市中央廣場第二座1601室 Hong Kong Hongkong-Shatin, N.T.-Unit 1601, Tower 2, Grand Central Plaza, 138 Shatin Rural Committee Road
Tel: 010-58706300
Email: caroline.he@epiroc.com
Web: www.epiroc.com

安百拓是全球领先的采矿与基础建设领域的生产力供应商。安百拓拥有前沿的技术，专注于研发并生产创新、安全且可持续利用的凿岩钻机、岩石开挖和建筑设备及工具，并且能够提供世界一流的服务及自动化和互操作性解决方案。安百拓总部位于瑞典斯德哥尔摩，2018年收入达380亿瑞典克朗。安百拓拥有14,000多名富有热情的员工，能够为150多个国家的客户提供支持与合作。
Epiroc is a leading global productivity partner for the mining and infrastructure industries. With cutting-edge technology, Epiroc develops and produces innovative, safe and sustainable drill rigs, rock excavation and construction equipment and tools. The company also provides world-class service and solutions for automation and interoperability. Epiroc is based in Stockholm, Sweden.

Jungheinrich AG

4.1C4-002

Address: 德国 Germany Hamburg-Hamburg-Friedrich-Ebert-Damm 129
Tel: 02153295072
Email: wenyan.bao@jungheinrich.cn
Web:

斯蒂雅阁能源服务有限公司 / STEAG Energy Services GmbH

4.1C5-002

Address: 德国 Germany Essen-RÜttenscheider Strasse 1-3 45128 Essen Germany
Tel: +86 (021) 68182708
Email: zhihong.yi@wanchenghb.com
Web:

中菲行空运（香港）有限公司 / DIMERCO AIR FORWARDERS (H.K.) LIMITED

4.1C6-001

Address: 香港地区 HongKong China FLAT/RM A&B BLK B 18/F BILLION CENTRE 1 WANG KWONG ROAD KOWLOON BAY KL
Tel: +86-21-51336752
Email: Michelle_Fu@dimerco.com
Web: www.dimerco.com

中菲行放眼国际、掌握趋势，在全球有超过150个服务网点，覆盖亚洲、北美、欧洲、澳洲等17个国际和地区。中菲行通过策略联盟，整合上中下游供应链，提供客户从发货装箱、运输、卸货，乃至仓储的一站式门到门运输服务。
Dimerco Express Group holds global view and foresees market trend, and has developed a global network to operate over 150 business locations in 17 countries in Asia, Australia, North America and Europe, along with more than 190 strategic partner agents in rest of the world. We provide comprehensive logistics services to our customers through strategic alliance with air and ocean carriers, etc.

迅达管理有限公司 / Schindler Management Ltd.

4.1C6-002

Address: 瑞士 Switzerland Luzern-Ebikon-Zugerstrasse 13
Tel: +86 21 67098335
Email: Jerry.shao@schindler.com
Web: www.schindler.com

迅达集团成立于1874年，是全球领先的电梯、自动扶梯和相关服务供应商。迅达集团创造新的系统和解决方案，使世界上的建筑和城市更安全、更高效、更可持续、更舒适，迅达将成为您的首选。
Founded in Switzerland in 1874, the Schindler Group is a leading global provider of elevators, escalators and related services. To create new systems and solutions to make the world' s buildings and cities safer, more efficient, more sustainable, more comfortable every day, and to be Your First Choice.

爱立信有限公司 / Ericsson AB

4.1C6-005

Address: 瑞典 斯德哥尔摩-希斯塔-Torshamnsgatan 21 Sweden Stockholm-Kista-Torshamnsgatan 21
Tel: 010-84769000
Email: kimm.diao@ericsson.com
Web:

宝尔捷自动化集团 / Broetje-Automation GmbH

4.1C7-002

Address: 德国 Germany Germany-26180 Rastede-Am Autobahnkreuz 14
Tel: 02162193350
Email: lingxiao.feng@broetje-automation.com
Web: www.broetje-automation.de

宝尔捷自动化的产品涵盖了航空行业整个相关工艺、生产和自动化专业技术。我们对于复合材料加工技术用来减轻飞机重量，就像我们对于机器人系统一样的熟悉。这就是我们怎样建立适用于所有飞机机型持续高效生产和交钥匙生产解决方案的宗旨："携手谱写 取胜之道"。
Broetje-Automation is a leading expert in the aerospace industry and realizes advanced solutions for aircraft assembly since 1979. The company is a member of Shanghai Electric Group.

東京産業株式会社 / TOKYO SANGYO CO.,LTD.

4.1C6-003

Address: 日本 東京都千代田区大手町2丁目2番1号Japan SHIN-OTEMACHI BLDG.2-1,OTEMACHI 2-CHOME CHIYODA-KU,TOKYO 100-0004,JAPAN
Tel: 62351333
021-62351333
Email: shi@tscom.com.cn
Web: www.tscom.co.jp

公司自1947年（昭和22年）创办以来，作为设备综合商社始终以『信赖』与『贡献』作为公司理念开展活动。具体而言，就是进行与客户联系密切的营业活动，把握客户的需求，迅速地提供问题解决方案和最适合的商品从而赢得客户的信赖，实现企业对社会的贡献。这样我们得以迎来公司成立70周年纪念日，为此，我们对于广大客户及各协作单位的支持表示深深的感谢。

德国西克公司 / SICK AG

4.1C6-006

Address: 德国 沃迪科驰市-德国沃迪科驰市欧文西克大街1号 Germany Waldkirch-Erwin-Sick-Street 1, 79183 Waldkirch
Tel: 010-62406092-633
Email: tian.huang@sickmaihak.com.cn
Web: www.sick.com

SICK（西克）公司是全球领先的的传感器以及传感器解决方案的生产商，是工业自动化领域的技术及市场领导者之一.SICK公司于1946年由公司创始人欧文.西克博士（Dr. Erwin Sick）在德国创立，经过70余年的发展，目前已成为一家拥有9000余名员工，营收数十亿欧元，在88个国家和地区拥有分支机构的全球性企业公司还拥有2300多项专利和约40000种产品，在工厂自动化，物流自动化和过程自动化三个领域拥有卓越的知名度和良好的口碑。
Founded in 1946, the company now has more than 80 subsidiaries and equity investments as well as numerous agencies around the globe. SICK achieved Group sales of about EUR 1.6 bn. in the 2018 fiscal year with almost 10,000 employees worldwide. SICK is one of the leading manufacturers which provides sensors and application that create the basis for controlling processes securely and efficiently

Kinshofer GmbH

4.1C7-003

Address: 德国 Germany Waakirchen-Hauptstr. 76
Tel: 0577-25885886
Email: sherry@ATCChina.cn
johnhu@rcmpc.com
Web: www.kinshofer.com

The KINSHOFER GmbH,founded in 1971, is one of the leading manufacturers of attachments for loader cranes and hydraulic excavators, as well as for rotators, tilt rotators and rotary actuators.

Toyota Tsusho Corporation

4.1C6-004

Address: 日本 Japan Tokyo -3-13, Konan 2-chome, Minato-ku,
Tel: 81-3-4306-3021
Email: nobuaki_sugiura@toyota-tsusho.com
Web: www.toyota-tsusho.com/english

Toyota Tsusho, the trading arms of the Toyota Group, oparates in 90 nations.We handle a vast range of produnts and services, including automobiles, infrastracture,development, chemicals, and foodstuff.

T&I 电气有限公司 / T&I Electric GmbH

4.1C7-001

Address: 德国 黑森州-法兰克福-Hanauer Landstr. 126-128 Germany Hessen-Frankfurt-Hanauer Landstr. 126-128
Tel: +86 571 86530557
Email: lmp2@xianhengguoji.com
Web:

经营范围包括电气自动化、材料检测、环境检测、实验室仪器、通用仪表类仪器；在电力、铁路、能源、建筑行业的测试仪器和施工工具等，以及相关产品的技术咨询和服务。
Business scope includes electronic and automatic instruments, laboratory equipment and multiple devices, such as materials testing and environmental testing equipment in the electrical, rail, engineering and construction sectors, as well as providing technology support and consulting services

* The deadline for information submission is 24:00, September 20. All information shall be provided and filled in by the exhibitors and the operating agencies. The Organizers bear no liability for any errors or mistakes in the information.

* 信息截止到北京时间9月20日24:00，所有信息均为参展商及组展机构自行提供及填报。若有错误，承办单位概不负责。

装备展区

EQUIPMENT

3/4.1馆 Hall / 北广场 North Square

科技生活展区
SCI-TECH LIFE

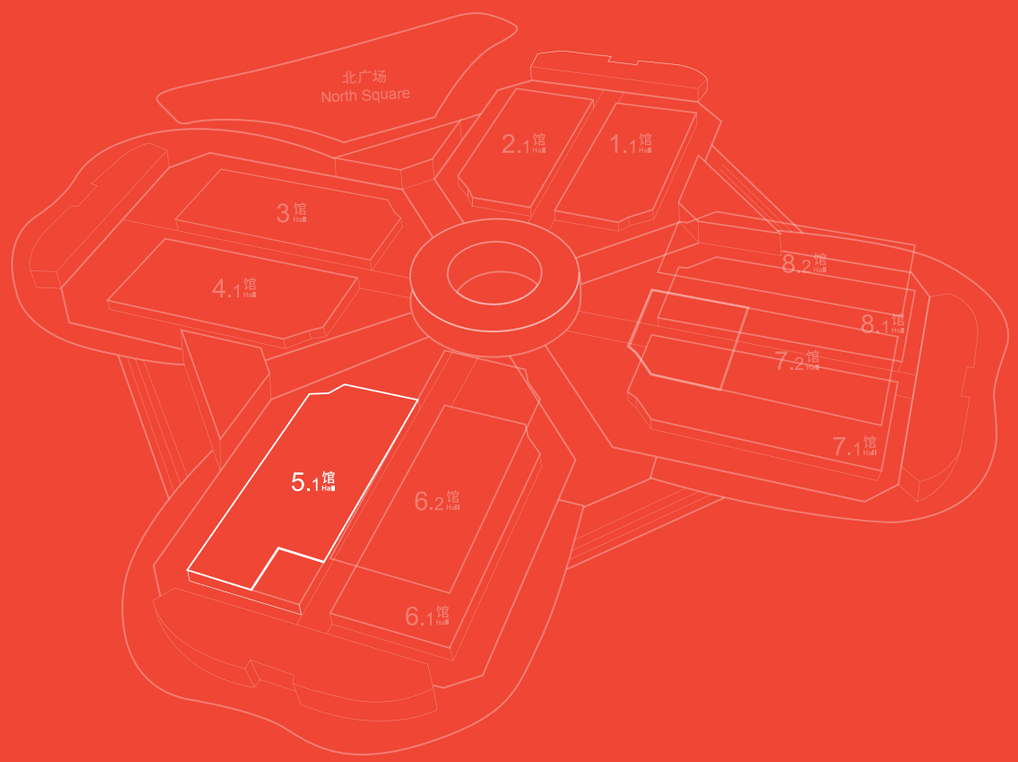

5.1馆 Hall

羽苏有限公司 / ELOZO OY

5.1A0-01

Address: 芬兰 瓦萨-Tervajoki-Loukontie 8 66440 Finland Vaasa-Tervajoki-Loukontie 8 66440
Tel: +86(010)84286900
Email: li.ziruo@elozo.cn
Web: elozo.works

Elozo，羽苏品牌，隶属于享誉全球的芬兰HTT集团，通过高科技专利技术，致力于各类活性氧除菌设备的设计、研 发、生产。Elozo除菌设备利用活性氧，强效氧化分解、杀灭、去除由各类污染源产生且附着在物品表面的异味及有害微粒。
在满足居家生活的需求同时，也广泛应用于各个政府职能部门，国防安保，能源教育，医疗旅游，餐饮娱乐等行业。
Elozo活氧除菌设备，强效杀灭、去除附着在物品表面的异味及有害微粒。
Elozo is a Finnish Cleantec brand owned by HTT-Group; in research, development, production and sales of active oxygen equipment. Elozo is widely used in most of Europe for: theatres, fire, public security, laboratories, armed forces, kindergartens, hospitals, hotels as well as sport venues. Elozo is an essential and irreplaceable for precision sterillisation.

宏迎科技有限公司 / Sbarco Technology Co., Ltd.

5.1A0-04

Address: 台湾地区 新北市中和区23556立德街115号4楼 Taiwan Region 4F, No. 115, Lide St., Jhong-He dist., New Taipei City, 23556, Taiwan
Tel: 886232343098
Email: arnaud_yang@sbarcotech.com
Web: www.sbarcotech.com

宏迎科技(SBARCO)成立于2009 年，是一支在条码业界多年经验，所组成的专业研发团队。我们秉持着创新、认真、严谨的态度设计硬体、机构和软体。更以真诚的心来顷听客户的需求，并实时反应以解决您的问题。
身为一个设计和制造者，宏迎将持续提供优良的产品给所有的合作伙伴。如同我们的高品质承诺，是您唯一可以依靠的伙伴。
Sbarco Technology was founded on 2009 by a team with years of experience in the barcode field. With the technical background of experienced and professional R&D team, innovative design on hardware, mechanical, software and firmware is our strength core. We could reflect and resolve rapidly the requirement from the customers.

NICE S.P.A

5.1A0-02

Address: 意大利 VIA CALLALTA -ORERZO (TV)-1 CAP 31046 Italy ORERZO (TV) VIA CALLALTA 1 CAP 31046
Tel: +86 21 6089 0008
Email: cindy.qiao@niceforyou.com.cn
Web: www.niceforyou.com

Nice于二十世纪九十年代早期成立于意大利Oderzo(TV)，Nice设计、制造和销售适用于多个领域的家居自动化系统,将技术创新和设计完美结合。集团20多年的快速发展，成功融合多个世界尖端品牌。更多信息，欢迎访问www.niceforyou.com。

纽媛丝智能科技有限公司 / NuEyes Technologies, Inc.

5.1A0-05

Address: 美国 United States of America California-New Port Beach-120 Newport Center Drive, Ste.232 92660
Tel: 0518-85413525
Email: bes_trade@126.com
Web: www.nueyes.com

NuEyes was founded by two U.S. veterans. Our glasses and software have been modified to assist people with visual impairments and to provide a platform for further feature development.
We want to give the visually impaired the opportunity to have a normal life and partake in everyday tasks without their vision disabling them.

TEYI MEDICAL TECHNOLOGY CORP.

5.1A1-02

Address: 美国 加利福利亚-戴维斯市-美国加利福利亚戴维斯市222A萨杰路215 United States of America California-Davis-215 SAGE ST APT 222A DAVIS CA 95616
Tel: 0051-63852155
Email: teyitek@gmail.com
Web: www.teyimedical.com

TEYI MEDICAL TECHNOLOGY CORP.是一家以解决亚健康和慢性病为战略和产品导向，专注于特医产品、航空旅游保健用品的科技创新型公司，主推产品NAPHUBS，是一款健康能量短时休息舱，主要应用于机场、商场、园区、景区、写字楼、高速公路服务区等，为用户提供临时小憩、放松身心、私密办公、补充能量、减压充电、健康理疗、户外露营、休闲娱乐、宝妈哺乳等服务空间。
The company is an Internet + technology enterprise dedicated to solving chronic diseases in the field of big health. Its product-the NAPHUBS, health and energy rest cabin, is useful for short-term rest in transportation service centers, shopping malls, enterprise parks and other scenarios.

DUST-TRAP DISTRIBUTIONS CORP

5.1A0-03

Address: 加拿大 Canada ON-TORONTO-5 HILLSDALE AVENUE, EAST
Tel: 1 416 481-7341
Email: nelsonhulli@yahoo.com
Web: www.dust-trap.com

DUST-TRAP DISTRIBUTIONS has grown to establish itself as a manufacturer and distributor of home care products,vacuum cleaners,parts & accessories, janitorial supplies , medical supplies and specialty items. We designed series of central vacuum systems under our registered CANALUX brand that have all the power, suction, and warranty you'll ever need for need for your size of home and lifestyle.

KINGSTRONIC HONGKONG LTD

5.1A1-01

Address: 香港地区 HongKong Region, China HK-WANCHAI-8/F 53 LOCKHART RD
Tel: 86-21-64278640-101
Email: info@kingstronic.com
Web: www.jj1997.com

KINGSTRONIC is the leading supplier specializing in pipe inspection system for more than 20 years. Our products lines include pipe inspection camera, pipe inspection robot, manhole camera, chimney camera, borehole camera, air duct inspection/cleaning robot, pipe locator，USR system and so on.

宝联通绿能科技股份有限公司 / PROLINK MICROSYSTEMS CORP.

5.1A1-03

Address: 台湾地区 台北市-内湖区阳光街349号6楼 Taiwan Region, Taipei -6F., No.349, Yangguang St., Neihu Dist.
Tel: +886-2-26591588
Email: selina@namliong.com.tw
Web: www.prolink.com.tw

成立于1989年，以多媒体产品经营，2000年股票公开上柜，2010年成立LED单位，自创品牌La Rose玫瑰之光。2014年进军太阳能光电、智能型管理系统(RFID)及3D PRINTER等产业。旗下H&H为健康科技用品的自有品牌，为健康快乐代名词，发展能量辅具、寝具，研发水平律动、3D运动及高速震动健康科技床，代替运动及有效帮助睡眠。
PROLINK MICROSYSTEMS CORP. was founded in 1989 and specialized in multimedia & LED lighting innovation. PROLINK operates private brands in Solar photovoltaic energy EQPT., RFID, 3D Printer, and Great Health industries(H&H's Electric HSV+WBPA Exercise Bed new released).

勝得菜國際股份有限公司 / Sandalphon International

5.1A1-04

Address: 台湾地区 -台南市-莊敬路136巷13號 Taiwan Region-Tainan-No. 13, Lane 136, Zhuangjing Road
Tel: +886-6-2093126
Email: shawnyu@sandalphon.com.tw
Web: sandalphon.com.tw

睡眠撲滿是由勝得菜國際博士團隊專注多年研發出獲得專利的獨家低頻SFT晶片，開啟後晶片即產出一個模擬創造2×2公尺的良好自然頻率磁場，降低周遭高頻電波對人體的影響，如同處在大自然的場域中，使身體自然放鬆、腦波放慢，主動協助深睡期延長，提升睡眠品質。
SleepBank is a patented and exclusive SFT (Sleep Frequency Technology) chip researched and developed by the Ph.D. team. The chip generates a 2m×2m natural frequency magnetic field that reduces the influence of high-frequency radio waves. SleepBank slows down your brain wave to improve your sleep quality.

Famic Technologies Inc

5.1A1-06

Address: 加拿大 Canada Quebec-Montreal-9999 Cavendish Blvd Suite 350,
Tel: +1 514-748-8050x260
Email: wwang@famictech.com
Web: www.famictech.com

Famic Technologies提供高端软件解决方案。我们的CAD软件和仿真软件，包括软件咨询服务，全世界闻名。在所有产品中，发密科Automation Studio™在全世界处于领先地位，界面语言有12种，如需了解更多信息，请访问我们的网站：www.famictech.com。
Famic Technologies provides high-quality software solutions. Our CAD and simulation software as well as our consulting services in software engineering are renowned worldwide. Among our products, Automation Studio™ is leading worldwide and available in 12 languages. For more information please visit our Website: www.famictech.com.

Maple Armor Fire Alarm Device Co., LTD

5.1A1-06

Address: 加拿大 Canada Quebec-Brossard-8866 Boulevard du Quartier
Tel: +1 514 998 2819
Email: skydethomas@gmail.com
Web: maplearmor.com

美安消防器材于2011年在加拿大魁北克蒙特利尔成立。公司致力于设计，生产可定位消防系统。具有领先优势的研发团队专注于开发创新产品。我们相信全世界的商业用户都可以从我们先进的设计，和基于UL/ULC最新标准生产的高质量产品中获益。
Maple Armor designs and manufactures addressable fire alarm systems. Our industry leading R&D teams focus on developing products that are built to innovate and last. We understand that our products represent an opportunity for commercial clients around the world to benefit from market leading design, performance, and quality, produced in accordance with the latest UL/ULC standards.

VAT IT (Hong Kong) Limited

5.1A1-05

Address: 香港地区 HongKong Region, China UNIT A, 17/F CENTRE MARK II 305-313 QUEEN'S ROAD CENTRAL HK
Tel: 86 21-62736837-817
Email: summer.guo@vatit.cn
Web: www.vatit.com

VAT IT Group是全球最大的退税服务公司。
我们为客户提供简便的检录流程，量身定制的服务和行业首创的技术，使您的退税收益实现最大化。
我们可为您提供全面的端到端国际增值税退税解决方案，包括与境外和境内商务差旅相关的费用，运输和A/P费用，以及航空、会议展览和纯旅游行业的专业增值税退税服务。
VAT Cloud:
由我们总部卢森堡以及处理中心-南非约翰内斯堡的51为技术骨干组成的团队研
VAT IT GROUP
We're the biggest VAT reclaim firm on the planet. Our industry-first technology, tailor-made services and simple sign-on process maximizes your VAT Refunds.
We offer full, end-to-end international VAT recovery solutions, from expenses related to foreign and domestic business travel, shipping and A/P expenses, as well as specialized tax recovery services for the aviation, MICE, TOUR.

Bio-K+ Plus

5.1A1-06

Address: 加拿大 Canada Quebec-Laval-495 Boulevard Armand - Frappier
Tel: +1 514 612 0828
Email: richard.zhu@me-associates.com
Web:

Bio-K+®是来自加拿大的著名益生菌品牌，立足于加拿大魁北克，业务覆盖北美市场。Bio-K+®专注于益生菌的研发生产，产品从天然食品连锁商店扩展到知名超市、药房和医院，在北美医院和药房广泛使用。Bio-K+®的专利技术在全球益生菌行业中名列前茅并获得加拿大卫生部官方认证，是北美执业医生及药剂师专业推荐的首选。ME Associates 是Bio-K+授权在中国/香港地区的独家代理商。
Bio-K+ International Inc. is a Canadian biotech corporation, it specializes in the research, manufacturing of Bio-K+® probiotic. The company has quickly expanded businesses from Québec to international network of pharmacies, grocery stores and hospitals, with amazing results in fighting against intestinal and infectious diseases. The business in China is represented by Me-Associates.

BoreA Canada

5.1A1-06

Address: 加拿大 Canada Quebec-Boisbriand-3177, rue Beausejour
Tel:
Email: vega@boreacanada.com
Web: boreacanada.com

BoreA Canada 公司秉承传统，运用可持续的创新提取工艺，萃取有机精油、纯露和其它高质量提取物。植物采集地远离人类居住开发区，主要源自分布在广袤领土上的公共地域，并获得政府长期担保。保护环境对我们至关重要！
BoreA Canada produces organic essential oils, hydrosols and other high quality extracts through its traditional and innovative extraction processes which are based on sustainability. Plants are harvested far from human habitation and development, coming mainly from public lands covering vast territories with long-term government guarantees. Protecting the environment is important to us!

庞巴迪娱乐动力产品 / BOMBARDIER PRODUITS RÉCRÉATIFS

5.1A1-06

Address: 加拿大 Canada Québec -Valcourt-726, rue St-Joseph
Tel: 862100000000 / 862131076130
Email: amanda.cui@brp.com
Web: www.brp.com

BRP（庞巴迪娱乐产品公司）是一家加拿大公司，是动力运动车辆和推进系统领域的全球领导者，拥有超过75年的独创性和密集的消费者关注。BRP的行业领先和独特产品组合包括Ski-Doo和Lynx雪地摩托车，Sea-Doo船只，Can-Am和越野车，Alumacraft船，Evinrude和Rotax船用推进系统以及用于卡丁车的Rotax发动机，“三轮摩托车和休闲飞机。
BRP is a world leader in the design, development, manufacture, distribution and marketing of motorized recreational vehicles. BRP products are sold in more than 105 countries. We have manufacturing operations in five countries in Canada, the United States, Mexico, Finland and Austria. In our portfolio, we have Ski-Doo and Lynx snowmobiles, Sea-Doo watercraft, all-terrain vehicles.

Industrie Orkan Inc.

5.1A1-06

Address: 加拿大 魁北克-蒙特利尔-3140 Rue Star Saint-Hubert (Québec) J3Y 3W6 Canada Quebec-Montreal-3140 Rue Star, Saint-Hubert, J3Y 3W6
Tel: 4000053353
Email: liuhao@orkan.com.cn
Web: www.orkan.com.cn

一家专注于提供空气净化滤芯，哮喘及过敏治疗治疗，医疗空气净化改善系统的加拿大研发制造厂商。致力于研发军用及民用HEPA滤芯、新风净化设备、医疗空气除菌消毒产品、TVOC处理产品、空调产品等一系列完善配套的室内空气质量改善设备。公司产品用于非典及埃博拉病毒防治，在加拿大魁北克省的市场份额占到90%以上，营销网络遍布美国、中国、法国等多个国家和地区，市场份额逐年稳步增长。
A Canadian R&D manufacturer specializing in providing HEPA filters, asthma & allergy treatment equipment and medical air purification systems. Orkan's products have been used for the prevention and treatment of SARS and Ebola virus. The market share in Quebec, Canada accounts for more than 90%, and is steadily increasing year by year, spreading throughout the United States, China, France, etc.

BrainCo.Inc

5.1A2-03

Address: 美国 United States of America Somerville-120 Beacon St #300-120 Beacon St #300, Somerville, MA 02143, USA
Tel: 0571-86167660
Email: di.zhang@brainco.cn
Web: www.brainco.cn

BrainCo于2015年初由哈佛大学创新实验室孵化，是全球领先的非侵入式脑机接口技术方案供应商，是世界十大脑机接口公司之一。BrainCo团队核心成员拥有哈佛大学、MIT、NASA等知名机构的博士研究工作经历，曾在《elife》《科学》杂志等顶级期刊发表五十余篇论文。已得到Boston Angel Club、中国电子、鼎晖投资、光大控股、朗盛资本、腾讯联合创始人的投资。目前在波士顿、深圳、北京、杭州等地设有办公室。

ABACUS BUSINESS CAPITAL, INC.

5.1A3-02

Address: 美国 United States of America CA 91748-738 EPPERSON DRIVE, CITY OF INDUSTRY, CA 91748
Tel: 15902151191
Email: wuhy@shanghaijucheng.com
Web:

美国博宝特机器人公司 / BOBOT ROBOTICS INC.

5.1A2-01

Address: 美国 特拉华州-苏塞克斯郡刘易斯市-滨海公路16192号 United States of America Delaware-Lewes, Sussex-16192 Coastal Highway street
Tel: +86 0552-3386111
Email: 99759199@qq.com
Web: www.bobotrobotic.com

Bobot Robotics Inc. established in 2011, is a professional manufacturer engaged in the research, development, production, sale and service of robot vacuum cleaner, window cleaning robot, electric spin mop and so on, our faith is providing excellent cleaning robot and making the world clean. We are located in Delaware, with convenient transportation and beautiful environment.

太子企業集團/萬榮行銷股份有限公司

5.1A2-04

Address: 台湾地区 Taiwan Region, China 台北市-台北市大安區敦化南路二段39號15樓
Tel: 886227007618
Email: hsieh4292@gmail.com
Web: www.aut021.com.tw

太子企业集团(Prince Group Auto21) 创立于1965年，万荣行销公司是太子企业集团子公司，协助开发及促销其关系企业之产品。目前事业已发展涵盖之智能产业如：人机介面、生医科技、智能载具等；以及车辆事业、产业车辆、房地产、金融保险服务等多角化的综合型企业。太子企业集团是MIT全球250家的ILP会员之一，共同投入创新科技与智能产业，创造21世纪产业成长与新价值。(第二届展品：智能手势、智能醫美、智能工廠、智能物流等)。

Aetho

5.1A3-03

Address: 美国 United States of America DE-Dover-8 The Green STE A
Tel: +1 (215) 821-7290
Email: h@aetho.co
Web: timewethrive.com

Thrive是新一代的会议App/软件及服务（SaaS，一种通过Internet提供软件的模式，厂商将应用软件统一部署在自己的服务器上，客户可以根据自己实际需求，通过互联网向厂商定购所需的应用软件服务，按定购的服务多少和时间长短向厂商支付费用，并通过互联网获得厂商提供的服务）平台，通过Thrive，与会者可以以虚拟现实的方式参加会议，更加自然地进行交流与合作。
Thrive is a next generation conferencing App/SaaS platform for remote participants to communicate and collaborate much more naturally. Our solution reduces business travel costs dramatically by bringing people together into a virtual space to work effectively, whether it is for use cases such as product prototyping, remote technical support, training, telemedicine, ecommerce or customer service.

KURSEL LIMITED

5.1A2-02

Address: 英国 United Kingdom East Sussex-Leonards-on-sea -Napier Road, Castleham Ind. Est. St. Leonards-on-Sea, East Sussex
Tel: 02168815196
Email: nickshi@kursel.com nickshi@kursel.ltd
Web: www.focus-sb.co.uk

Focus SB are a luxury wiring accessories manufacturer based in Hastings in Sussex where we have our three manufacturing facilities and head offices. And we have been established for 40+ years in the UK at the same time, all of our products are 100% manufactured and shipped from these facilities. Our bespoke wiring accessories range aimed at the high end residential, high end commercial and luxury.

AGC Inc.

5.1A3-01

Address: 日本 Japan Tokyo-Chiyoda-ku-1-5-1, Marunouchi
Tel: 02153830808
Email: ping-dong@agc.com
Web: www.agc.com

好樣科技有限公司 / HOBOT Technology

5.1A3-04

Address: 台湾地区 新竹縣竹北市高鐵九路59號 Taiwan Region-Hsinchu County-30274, No. 59, Gaotie 9 Rd., Zhupei City
Tel: +88636676699
Email: gina.lan@hobot.com.tw
Web: hobottechnology

好樣科技於2010年由趙志謀先生成立，主打HOBOT玻妞品牌，將高科技產業的技術能力帶入家用機械人所屬的「民生科技」領域。主要產品為玻妞擦窗機器人與雷姬掃拖地機器人，從材料的選用、結構設計、程式撰寫到外觀設計，全都經歷無數次的試驗，最終將完美產品呈現在消費者眼前。
旗下產品目前已行銷至全球三十多國，註冊多國專利，並且獲得許多獎項的肯定，好樣團隊將不斷自我鞭策，持續推出更貼近消費者需求的產品。
HOBOT Technology Inc. was founded by Mr. George Chao in 2010. Focusing at developing the Window-Cleaning Robots “HOBOT” in the early stage, in 2017, HOBOT Technology entered the sweeper robot market with its “LEGEE-668 Vacuum-Mop 4 in 1 Robot.” Thanks to multi-nation patents and awards won, HOBOT products are now available in more than 30 countries and districts.

Oben Inc.

5.1A3-05

Address: 美国 United States of America California-Pasadena-130 W Union St
Tel: +8619802103928
Email: tiffany@obencn.com
Web: www.oben.com

ObEN是一家致力于打造个性化人工智能技术PAI（Personal Artificial Intelligence）的人工智能公司，希望以此改变消费者与数字世界互动的方式。2014年创立于加州Pasadena，ObEN的技术让用户能够创建属于自己的智能3D形象PAI，PAI的长相、声音、性格都与用户本人相似，并部署在Project PAI 区块链上。目前，公司投资方包括腾讯、软银基金、K11。
ObEN is an artificial intelligence company that is building a decentralized AI platform for Personal AI (PAI), intelligent 3D avatars that look, sound, and behave like the individual user, deployed on the Project PAI blockchain. Founded in 2014, ObEN is a Tencent, Softbank Ventures and K11 portfolio company.

Microsoft Co.,Ltd.

5.1A3-06

Address: 美国 United States of America WA-Redmond-15700 NE 39th St Redmond
Tel: 86-10-59178700
Email: amy.li@microsoft.com
Web: www.software.com

微软作为全球领先的软件、服务、设备和解决方案供应商，自1975年成立以来，一直致力于帮助个人和企业用户全面发挥科技潜能。四十年来，微软始终引领技术创新与变革，其卓越的软件、设备和服务能够帮助用户提升在生活和工作的方方面面，使数以亿计的用户真正受益于科技。微软公司总部位于美国华盛顿州雷德蒙德市，在全世界190个国家和地区建立分支机构，拥有超过131,300名员工。

Smart Skyland Industrial Co.,Limited

5.1A4-01

Address: 香港地区 湾仔中环广场3806室 Hong Kong Region, Room 3806, Central Plaza, Wanchai, Hong Kong
Tel: （+86）021-39882552
Email: xulian.wu@wengold.net
Web: www.wengold.net

本集团大陆的科技板块，专注图像呈现处理、虚拟/增强现实、物联网人工智能的高科技前沿公司，为全球客户提供具有行业和专业深度的技术服务及行业解决方案。是思科、英特尔等高科技公司的长期战略合作伙伴；是IEEE会员，拥有参与国际标准知道的参与权和国际话语权。
We are focusing on image rendering, virtual/augmented reality, IOT /w AI, to provide global customers with industry and professional depth of technical services. We are going to keep long-term strategic with biotechnology, medical , high-end equipment, chips,materials, retail and education. As a member of IEEE, We did participate in the standards related to both digital twin and AR/VR.

曼汉科技有限公司 / MINHAND TECHNOLOGY LTD

5.1A4-01

Address: 英国 United Kingdom Manchester-Manchester-MINHAND EDUCATION GROUP LIMITED 53 Fountain Street, Manchester, M2 2AN
Tel: 17621391260
Email: yu.qiao@minhandgroup.com
Web: minhand

EYEXPO TECHNOLOGY CORP.

5.1A4-01

Address: 加拿大 Canada BC-VANCOUVER-618-1030 WEST GEORGIA ST.
Tel: 021-24150697
Email: jie.sun@eyexpo.co
Web: www.eyexpo.com

宏達國際電子(香港)有限公司 / HTC HK, Limited

5.1A4-01

Address: 香港地区 九龍-長沙灣-長沙灣道909號11 樓04-05室 Hong Kong Region, Kowloon-Cheung Sha Wan-Unit Nos. 04-05, 11th Floor, 909 Cheung Sha Wan Road
Tel: 13917031757
Email: Jeffrey_Zhang@htc.com
Web: www.vive.com/cn

Facebook Singapore Pte Ltd

5.1A4-02

Address: 美国 United States of America 9 Straits View, Level 29, Marina One Singapore 018937
Tel: + 65 9233 3060
Email: cindychen1@fb.com
Web:

Micro Crystal AG

5.1A5-01

Address: 瑞士 Switzerland Solothurn-2540 Grenchen-Muehlestrasse 14
Tel: (+86) 21-2412 5280
Email: sherry.zheng@cn.swatchgroup.com
Web: www.microcrystal.com

Micro Crystal AG, company of the Swatch Group Inc. Switzerland, founded 1978 in Grenchen, Switzerland, leading manufacturer of Miniature Quartz Crystals (30 kHz to 250 MHz), Real Time Clocks, Oscillators, OCXOs for the world's leading manufacturers of IoT, wearable, automotive, industrial, medical applications.

Renata SA

5.1A5-01

Address: 瑞士 Switzerland Basel County-4452 Itingen-Kreuzenstrasse 30
Tel: +86 (138) 2653 5045
Email: Andy.Gan@cn.swatchgroup.com
Web: www.renata.com

Renata SA, Swiss Company, leading global manufacturer and supplier of industrial batteries for watches and OEM electronic industry, offers a wide range of battery technologies: lithium primary and rechargeable, mercury-free silver oxide and zinc-air button cells, battery holders and thin film battery for smart labels, cards, wearable appl.

EM Microelectronic

5.1A5-01

Address: 瑞士 Switzerland Marin,-2074,-Rue des Sors 3,
Tel: +86 156 2607 4775
Email: YawPeng.NG@hk.swatchgroup.com
Web: www.emmicroelectronic.com

EM Microelectronic (EM) is a semiconductor manufacturer specialized in the design & production of ultra-low power, integrated circuits (IC) for battery- & field-powered applications in various markets.
EM have more than 40 years' experience in the design & manufacturing of IC processing analog & digital signals simultaneously.
EM specialized in customizing IC & modules for specific needs.

SAP

5.1A5-04

Address: 德国 Germany SAP SE, Dietmar-Hopp-Allee 16, 69190 Walldorf
Tel: 010-65898406
Email: chloe.jiang@sap.com
Web: www.sap.com/china

丹麦丹拿 / DYNAUDIO A/S

5.1A6-03

Address: 丹麦 skanderborg-skanderborg-斯坎纳堡 8660 Denmark skanderborg-skanderborg-Skanderborg 8660
Tel: 53555166
Email: aarya@dynaudio.com
Web: www.dynaudio.com.cn

自从1977年在丹麦创立以来，丹拿音响始终致力于研发、设计、生产和创造举世闻名的扬声器。我们为全世界众多的家庭用户、汽车用户和专业录音室带来卓越的产品和音质。丹拿音响自始至终不曾改变的理念是：忠实呈现原音，聆听艺术家的创作初衷。
Since 1977, Dynaudio has been devoted to the development,production and creation of world-famous speakers. We bring excellent products and sound quality to home users, car users and professional recording studios around the world. Dynaudio's idea is to present the original sound faithfully and listen to the artist's original intention.

Qualcomm

5.1A5-02

Address: 美国 United States of America CA-San Diego-5775 Morehouse Drive
Tel: +86-10-57760780
Email: xiaolong@qti.qualcomm.com
Web:

Steinway & Sons

5.1A6-01

Address: 德国 Germany Hamburg-Hamburg-Rondenbarg 10
Tel: 021-58663256
Email: DavidYu@steinway.com.cn
Web: www.steinway.com.cn

自1853年创立以来，施坦威始终致力于制造世界上最好的钢琴,无论音色,触感,设计美学还是收藏价值，其顶尖的手工技艺和永不妥协的制作标准，成就了每一台施坦威钢琴的卓越地位。凭借其力求完美的不断创新，施坦威钢琴始终是90%以上专业钢琴家的首选，得到全球无数音乐家、专业人士及音乐爱好者的青睐。
Since 1853, Steinway pianos have set an uncompromising standard for sound, touch, beauty, and investment value. Because of a dedication to continuous improvement, today's Steinway remains the choice of 9 out of 10 concert artists, and it is the preferred

Sound United, LLC

5.1A6-04

Address: 美国 United States of America One Viper Way Vista CA 92081 United States
Tel: 021-62485151
Email: Cuiting.Zhu@soundunited.com
Web: www.soundunited.com
www.denon.com.cn
www.marantz.com.cn.

Enterprise size, business content, market occupancy etc.
Sound United Group owns several international high-end audio visual brands,such as Denon, Marantz,Polk Audio,Definitive Technology, HEOS and CLASSE, Our products include AV receivers,HiFi audio, soundbars, wireless multi-room music systems, bluetooth speakers and headphones.

英飞凌科技股份有限公司 / Infineon Technologies AG

5.1A5-03

Address: 德国 慕尼黑-Neubiberg-Am Campeon 1-15, 85579 Neubiberg Germany Munich-Neubiberg-Am Campeon 1-15, 85579
Tel: 18916935296
Email: Chongjie.Zhang@infineon.com
Web: www.infineon.com

Infineon Technologies AG is a world leader in semiconductor solutions that make life easier, safer and greener. Microelectronics from Infineon is the key to a better future. Infineon is listed on the Frankfurt Stock Exchange (ticker symbol: IFX) and in the USA on the over-the-counter market OTCQX International Premier (ticker symbol: IFNNY).

西蒙集团 / Simon

5.1A6-02

Address: 西班牙 巴塞罗那-巴塞罗那-巴塞罗那 Spain Barcelona-Barcelona-Barcelona
Tel: 021-38555220
Email: Bob.jiang@simon.com.cn
Web: lighting.simon.com.cn

西蒙电气由阿尔杜罗·西蒙（Arturo Simon）创始于1916 年，最初的工厂位于西班牙加泰罗尼亚州的奥罗特(OLOT)。1972年，西蒙集团总部搬至享有“欧洲之花”美誉的巴塞罗那。
西蒙电气专业生产Simon品牌开关、插座、灯具、家居智能产品。西蒙电气一直致力于产品的不断创新，拥有大量工业知识产权，先后获得了“西班牙皇家杰出企业奖”、“西班牙产品设计大奖”等诸多荣誉。
Simon was established by Arturo Simon in 1916. Simon mainly specializes in producing switches, sockets, lighting and home smart systems. Always dedicated to product innovation, Simon has developed many products with intellectual property rights and won many honors, such as Spanish Royal Outstanding Enterprise and Spain's national Product Design Award.

福维克国际施特莱克公司 / Vorwerk International Strecker&CO

5.1A6-05

Address: 瑞士 瑞士弗赖恩巴赫Wollerau街11A Switzerland Schwyz Wolleraustrasse 11A
Tel: 8023-1088 extn. 8502
Email: miko.mei@vorwerk.cn
Web: www.vorwerk.com.cn

Vorwerk has been a family-owned company since its foundation in 1883.
Vorwerk stands for the direct route to the customer, a consistent commitment to service, and outstanding quality.
Sales in 2017: 2.9 billion euros, Business volume 2017: 3.7 billion euros, of which 2.3 billion euros came from direct sales
Vorwerk has 645,461 people around the world, of whom about 60,000 are independents.

康宁公司 / Corning Incorporated

5.1A7-01

Address: 美国 United States of America New York-Corning-One Riverfront Plaza
Tel: (86 21) 2215-2888
Email: xiez3@corning.com
Web: www.corning.com

康宁公司成立于1851年，总部位于美国纽约州康宁市。超过168年来，康宁凭借在特殊玻璃、陶瓷、光学物理领域的精湛专业知识，开发出众多创造了新行业并改变人类生活的产品和工艺。康宁公司2018年全年的核心销售额达到114亿美元，2019年美国财富500强排名第279位。
Corning Incorporated was founded in 1851, with its headquarters in Corning, New York, USA. For more than 168 years, Corning has applied its expertise in specialty glass, ceramics, and optical physics to develop products and processes that have created new industries and transformed people's lives. In 2018, the company's core sales exceeded $11.4 billion, ranked 279 in 2019 Fortune 500.

NOVISSA SWITZERLAND AG

5.1A7-02

Address: 瑞士 Switzerland SUTZ-2572 SUTZ-SCHULSTRASSE 1A
Tel: 13901180902 / 13720016242
Email: info@novissa.cn
Web: www.novissa.cn

NOVIS总部设立在瑞士SUTZ，著名钟表谷腹地。坐落于风景优美的比尔湖畔，与欧米茄、劳力士等众多名表厂比邻而居，被秀丽的钟表谷怀抱其中。同时NOVIS总部与瑞士联邦唯一 一所体育学院 ——瑞士联邦体育学院遥首相望。NOVIS凭借得天独厚的地理位置，把天然与纯粹融入到产品的研发中，将自然界凝聚的力量与精密工程相结合，激励着整个团队不断进取。NOVIS将永远秉承自然、健康的生活方式，研发出更高品质的厨房用具。

美乐家咖啡有限公司 / Melitta Group Management GmbH & Co. KG

5.1A7-03

Address: 德国 Germany Minden-Marienstraße 88, 32425
Tel: 021 6882 7522-8013 / 021-6882 7522-8013
Email: vivian.wen@melitta.cn
Web: www.melitta.de

德国美乐家咖啡创立于德国，一直以来我们致力于让咖啡爱好者随时随地轻松享受一杯好咖啡。1908年，公司创始人Melitta Bentz发明了滤纸滤杯，开创了现代手冲咖啡文化。之后111年里，我们不断创新，自主研发了全自动咖啡机、滴滤式咖啡机、咖啡豆、咖啡粉、商用机，成为为数不多提供全套解决方案的咖啡专家。
Melitta is a Germany coffee brand providing best experience for coffee lovers on every occasion. In 1908, Melitta Bentz invented filtercones and filter paper. Since then, we continually produce high quality products such as coffee machines, filter coffee makers, coffee beans, etc, becoming the one of the experts who offer a complete bean-to-cup solution for customers and consumers.

SIUS AG

5.1A7-05

Address: 瑞士 Zurich-Effretikon-Im Langhag 1 Switzerland 苏黎世-Effretikon-Im Langhag 1
Tel: 861085898677
Email: zjj@holybrother.com
Web:

The world's leading producer of electronic scoring systems for sport, military and police. For more than 50 years the name SIUS stands for quality in the world of international shooting sports.
SIUS是全球军事、警用及体育用电子报靶系统领先品牌。SIUS产品性能稳定，质量可靠，在五十多年的国际射击赛事中一如既往的提供着优质的服务和保障。

Naneon USA

5.1A7-06

Address: 美国 United States of America CA90040-Los Angeles-3364 Garfield Ave
Tel: 0755-82312389
Email: kim@nanoflowx.com
Web: www.nanoflowx.com

Advanced nano-coating specialist for the Electronics, Motorsports and Industrial Coating. Headquartered in Los Angeles,CA.Conducted 5 years of R&D,developed proprietary nano-coating formulas for the Electronics, Motorsports and Industrial Coating.Launched products in 2015,continuously improving our current product line and developing new products to introduce to the market.

DAESUNG MAREF CO.,LTD.

5.1A7-07

Address: 韩国 ROK(Republic of Korea) 298-24, Gongdan-Ro, Gunpo-Si, Gyeonghi-Do
Tel: 0755-83934040 / 82-70-7813-7357
Email: hujiatuan@sayesmed.com china@dsmaref.com
Web: www.sayesmed.com www.dsmaref.com

BNRMAX CO.,LTD

5.1A7-08

Address: 韩国 ROK(Republic of Korea) Seoul-Guro-gu-#1011, 271, Digital Valley 3
Tel: +82-2-2025-2036
Email: bnrmax@hanmail.net
Web: www.bnrmax.com

RayForce, R-510 needs NO batteries or any electric power.
It is charged by Solar Cell, even by Fluorescent lamps.
It irradiates Infrared Ray collected by the solar cell through the Infrared Diode, and also irradiates Magnetism of 1000 Gauss through 4 magnetic pins.

CLAIR, Inc.

5.1A7-08

Address: 韩国 ROK(Republic of Korea) Seoul-Secho-gu-2F, 148 Gangnam-daero
Tel: 02-581-2918
Email: hyjang@clair.kr
Web: www.myclair.com

Established in year 2014, The Clair, our office and factory are in Korea and we are dedicated to providing the most effective air purifiers. Unlike other large air purifiers, Clair is compact and suitable for your private area. It features its attractive and sophisticated design, which makes itself even closer to you.

VICTORIA PRODUCTIONS INC.

5.1A7-08

Address: 韩国 ROK(Republic of Korea) Gyeonggi-do-Munbal-ro-4th FL, 214-12
Tel: +82-31-955-7298
Email: Vproduction5@naver.com
Web: www.vproductions.net

Starting from New York, We've worked to expand the horizon of augmented reality and 3D technologies. Victoria Productions improves any exisiting content's value by introducing AR technology to traditional forms of content.

IZON

5.1A7-08

Address: 韩国 ROK(Republic of Korea) , Gyeonggi-do-Seongnam-si-107 Dunchon-daero, #701 Kumho Bldg, Jungwon-gu,
Tel: +82-1566-7348
Email: Jang5254@naver.com
Web: www.vision365.kr

IZON, the manufacturing and developing of Eye Exercises Wearable, established to Help to maintain and improve eyesight through eye exercise and measures the strabismus.
Eye Exercises Wearable(Eyesight Recovery Apparatus) is invented to measures the strabismus and help the eye for improving or maintaining eyesight and massaging around the eye to rest from fatigue of the eye for health of the eye.

Beyond Limit

5.1A7-08

Address: 韩国 ROK(Republic of Korea) Gyeongsangbuk-do-Gyeongsan-si-B9104B, 201, Daegudae-ro, jinlyang-eub
Tel: 82-2-6964-8297
Email: jhyoon@beyondlimit.co.kr
Web: beyondlimit2.gabia.io

Beyond Limit Co., Ltd. was established in 2015 We are currently developing a puzzle for children using augmented reality. We plan to export our products to Southeast Asian countries such as Vietnam, Indonesia starting from Japan market.

NLJI Co.,Ltd

5.1A7-08

Address: 韩国 ROK(Republic of Korea) Seoul-B105 Changui-guan, KonKuk University, 120 Neungdong-ro, Gwangjin-gu
Tel: +70 4246 2347
Email: airtory@naver.com
Web: www.airtory.kr

On fine dust days, 44 percent of mothers in Korea cancel their appointments to go out. But mothers are forced to go to a hospital or a mart with their babies. In this situation, a rechargeable air purifier 'airtory', which is attached to the stroller, is required. In addition, 'airtory' is portable, so you can use it in a car or a crib or whatever space your baby is in.

Pixelro

5.1A7-08

Address: 韩国 ROK(Republic of Korea) Gyeonggi-do-Uiwang-si-Room 724, Building A, 40, Imi-ro
Tel: 82-31-8069-8835
Email: kyoyaida@pixelro.com
Web: pixelro.com

PixelRo, a startup company that was spun off from Samsung Electronics on November 1, 2017, is developing a smartphone film and mobile application that makes it easier to manage a user's perspective.
With this technology, we will continue to work on research and manufacturing so that the people with the know can see a brighter world.

Illuvation Co., Ltd.

5.1A7-08

Address: 韩国 ROK(Republic of Korea) Jeollabuk-do-Jeonju-si-3rd floor 227, Andeogwon-ro, Deokjin-gu
Tel: +82-63-717-2226
Email: aullee@illuvation.kr
Web: www.illuvation.kr

Illuvation Co., Ltd is specialized total solution provider for pig farming. Illuvation is has developed 'Viiew', next generation smart pig scale. It is kind of ICT device weighing pig without contact. Taking photo a pig using palm sized smart device, weight of the pig is figured out no longer than 10 seconds and displayed on monitor.

Creative Bomb

5.1A7-08

Address: 韩国 ROK(Republic of Korea), Seoul-Jung-gu-40, Cheonggyecheon-ro
Tel: 010-6623-2033
Email: creativebomb@naver.com
Web: www.creativebomb.net

Creative Bomb produces preschool children's education contents using the character of 'Boto the Pink Dolphin' which is developed by our own. Our goal is to create educational content that takes into consideration educational factors and fun factors so that our children living in the 4th Industrial Revolution era can enjoy various IT contents suitable for development stage with cute characters.

UWICOM

5.1A7-08

Address: 韩国 ROK(Republic of Korea) Gyeonggi-do-Suwon-si-Industry University Cooperation Foundation, 703, 154-42, GwangKyosan-ro, Yeongtong-gu
Tel: +82-10-7350-4428
Email: jaehoonlink@gmail.com
Web: www.uwicom.com

"YOUR WISH IS MY COMMAND"
This is the line that Genie, the fairy of Aladdin Lamp, told Aladdin that he can do everything what he want. We've been studying the relationship between sound and ears for our customers. Someone's wish to hear and communicate better is the reason why we act. 『GENIESORI will give you great happiness in daily life.』

Altoran Research

5.1A7-08

Address: 韩国 ROK(Republic of Korea) Dejeon-Yuseonggu-D205 Daedeok Bizcenter 17 Techno 4ro
Tel: 070-4171-7496
Email: choibb08@naver.com
Web: altoranlab.com

Altora Research Institute was established in 2012 as a technology commercialization compay. For continued technology development and commercialization, the company released "Healthy drinks for intermediate function improvement," "Super food for antioxidants." and "Smart Air Pollution Alert."

KITA China Desk

5.1A7-08

Address: 韩国 ROK(Republic of Korea) Gangnan-Gu-Yeongdong-daero-3th FL, Trade Tower, 511
Tel: 02-6000-7607
Email: chinadesk@kita.net
Web: okfta.kita.net

As a one-stop support center for utilizing Korea-China FTA, experts from FTA and export-related organizations will participate and act as a window for utilizing the Korea-China FTA

DREAM AIR CO., LTD.

5.1A7-08

Address: 韩国 ROK(Republic of Korea) Gyeonggi-do-Seongnam-si-Suite 713, Hyundai I-Valley 31, Galmachi-ro 244 beon-gil, Jungwon-gu
Tel: 82-10-2739-9962
Email: noskkorea@naver.com
Web: www.nosk.com

DREAM AIR Company is the manufacturer and exporter of the world famous NOSK brand products. DREAM AIR is specialized in Healthcare products which include the Nosk Nasal Filter, Nosk Snoring(Nasal Dilator). NOSK Nasal Filter effectively block pollen, dust, allergens and airborne particles in our living environment for your clean breath.

SUHYUNTECH CO.,LTD.

5.1A7-08

Address: 韩国 ROK(Republic of Korea) Gyeonggi-do-Suwon-si-154-42, Gwanggyosan-ro, Yeongtong-gu,
Tel: +82 10 2585 3752
Email: suhyuntech@gmail.com
Web: www.alltalklab.com

We are venture company that develops a smart earplug earphone that enables easy conversation with the people around the earplug when the earplug is worn at the place where the noise is generated.

WIS

5.1A7-08

Address: 韩国 ROK(Republic of Korea) Korea-Jeollabuk-do-Howondae 3-gil, Impi-myeon
Tel: 063-451-0608
Email: ecowis01@naver.com
Web: ecowis.co.kr

Automatic extinguishing ashtray-- Smokcatch is equipped with a motion sensor in a mechanical ashtray with excellent automatic extinguishing function. The sensor captures the user approach and the system turns to Ready Mode in advance. Once the cigarette butt is detected, the roller compresses/ extinguishes it, thereby reducing waste volume before it enters Off Mode for itself.

SketchOn Inc.

5.1A7-08

Address: 韩国 ROK(Republic of Korea Gyeonggi-do-Suwon-si-Room 85313, SKK Univ., 2066 Seobu-ro, Jangan-gu
Tel: +82-31-299-6818
Email: luke@sketchon.me
Web: www.sketchon.me

SketchOn is a tech startup that specializes in printing solutions. SketchOn is a producer of software and hardware for Prinker - a new self-expression solution that allows to easily, quickly and safely apply any image user wants.

Lincsolution

5.1A7-08

Address: 韩国 ROK(Republic of Korea) Gyeonggi-do-Siheung-si-376, Mayu-ro
Tel: 010-5633-0566
Email: Choi@lincsolution.com
Web: www.lincsolution.com

Novelworks Co.,Ltd.

5.1A7-08

Address: 韩国 ROK(Republic of Korea) Seoul-Geumcheon-gu-B-1001, 70 Doosan-ro
Tel: +82-2-2169-2289
Email: jamesj@novel-works.com
Web: www.novel-works.com

We, Novelworks research ways to protect children from germs and harmful substances and, to offer them a healthier environment. We develop and offer eco-friendly air purifiers and toy sterilizers.
We will continue our research and development to offer you the best designs and UV LED solution for sterilization.

Lifecore Instrument Inc.

5.1A7-08

Address: 韩国 ROK(Republic of Korea) Gyeonggi-do-Gwangmyeong-si-A-1001, 60 Haan-ro
Tel: +82-2-6205-0683
Email: Lifecore11@gmail.com
Web: www.lifecoreworld.com

Lifecore Is water Ionizer specialized manufacturer based in Korea.
Having 12 patents related water electrolysis, water purification in home and industrial area.
Exporting to 22 countries in the world including USA,Germany,Italy,Singapore aand other countries.

APC Tech Co., Ltd

5.1A7-08

Address: 韩国 ROK(Republic of Korea) Chungcheongbuk-do-Chungju-si-32, Judeongnonggong-gil, Judeok-eup
Tel: +82 (0)2 6959 4250
Email: kslee@apctec.co.kr
Web: www.apctec.co.kr

APC Tech Co., Ltd. is expanding its field of business from Photocatalyst Technology and automation equipment systems to various engineering industries including computerized control systems and communication network services, based on its accumulated experiences and skills and continuous research and development.

VUiDEA, INC.

5.1A7-08

Address: 韩国 ROK(Republic of Korea) Seoul-702ho, 37, Maebongsan-ro, Mapo-gu
Tel: 82-2-2038-8377
Email: hkim8043@naver.com
Web: colorpopup.com

Since its inception, VUiDEA.inc has consistently research on mobile algorithms / technology development, practice on educational engineering and theory systematically. Due to it, in 2014, we developed world's best augmented reality technology converged with coloring using crayon and colored pencils, "Color PopUp". We have filed a patent application for " Color PopUp".

KITTEN PLANET CO., LTD.

5.1A7-08

Address: 韩国 ROK(Republic of Korea) Gyeonggi-do -Seongnam-si -P812 Daewangpangyo-ro 815 Bundang-gu
Tel: 070-8672-7553
Email: sales@kittenpla.net
Web: www.kittenpla.net

KITTEN PLANET CO., LTD.
KITTEN PLANET is a digital dental care startup and aim to be dental care platform.
At first we make services "BRUSH MONSTER" to help kids learn brushing their teeth, let alone to do so properly.

JAVA GROUP INC

5.1A8-01

Address: 美国 United States of America 加州-ONTARIO-2311 E LOCUST CT,ONTARIO CA 91761 USA
Tel: 86 571 88757955
Email: shanzhe@wsdcoffeemachine.com
Web: www.wsdcoffeemachine.com

JAVA GROUP是集研发、生产、销售、服务为一体的国际性咖啡机制造企业。我公司生产的"JAVA"系列咖啡机销至欧美、中东、东南亚等50多个国家和地区，并为2016 G20杭州峰会，2017 金砖国家领导人厦门会晤、2018上合组织青岛峰会等重大国际盛事提供服务，得到了国内外客户的广泛认可！
JAVA Group is a company dedicated to the design, manufacturer, sale and service of coffee machines. The company concentrates on producing espresso coffee machines for home, office and commercial use under the brand"JAVA". With over 12 years' experience and great effort, JAVA espresso coffee machines are sold all over the world.

Simfer Ic ve Dis Ticaret A.S

5.1A8-02

Address: 土耳其 Turkey Istanbul-Esenler-Tekstilkent Koza Plaza, B Blok No:708, Kat:6 34235
Tel: 00902124382638
Email: nuray.tomacoglu@simferexport.com
Web: www.simferexport.com

Simfer is one of the leading Turkish manufacturer of home appliances with exporting to more than 150 countries and is placed in top 500 industrial corporations in Turkey with a 6 million unit annual production capacity.
Delivering highly functional and purposefully design products, Simfer aims to touch the heart of every home. Simfer belives that the heart of any home is its kitchen.

安姆科 / Amcor Singapore Private Ltd.

5.1A8-03

Address: 瑞士 Switzerland Thurgauerstrasse 34 CH-8050, Zürich, Switzerland
Tel: 18616879978
Email: jessica.chen@amcor.com
Web: www.amcor.com

Amcor是全球最大的消费品包装公司，产品涉及食品、饮料、医药、医疗器械、家庭与个人护理用品、功能性薄膜等行业，为客户提供创新的包装产品和包装解决方案。
Amcor is a global leader in developing and producing responsible packaging for food, beverage, pharmaceutical, medical, home- and personal-care, and other products.

SIGMA

5.1A8-04

Address: 日本 Japan 神奈川县-川崎市-神奈川县川崎市麻生区栗木2-4-16
Tel: 021-62331086
Email: zhang.renjun@sigma-photo.com.cn
Web:

适马的企业理念是一切技术、知识、经验和智慧的总和。从事产品开发、设计、加工的技术人员。负责产品从质检到包装、发货全过程的质量、后勤人员还有那些将产品升华为商品的销售人员。员工各司其职，而他们对产品倾注的热情饱合在每一款适马产品之中。

Heritage Security Products Inc

5.1A8-05

Address: 美国 United States of America 1900 Empire Blvd # 231 Webester, NY 14580
Tel: 5857730295
Email: secretary02@safewellgroup.com
Web:

Tech(Macau) Limited

5.1B0-02

Address: 澳门地区 Macao China Avenida da Amizade,No.197-223,Salas C-D Edif. San Kin Yip Commercial Center, 15 Andar, Macau
Tel: (+853) 2878 7317
Email: sylviatsan@hk1180.com
Web:

TPI CORPORATION

5.1A8-06

Address: 美国 United States of America 田纳西州-State of Tennessee 312 Rosa L. Parks AVE, 6th FL Nashville, TN 37243-1102
Tel: 021-69927908
Email: xiaoshao45@126.com
Web:

美国TPI公司创建于1921年，80多年来专门从事智控供暖系统（利用电能）的研究和制造，并拥有多种电热供暖设备的技术专利，已成为当代同类设备的制造规范，为众多的电热设备生产厂所利用。Markel智控供暖系统是由电散热器及智能温控装置组成，目前，产品涵盖了工业及家用电力供暖设备、通风及空气过滤、智能温度控测和控制设备，是当前美国生产电暖设备规模最大、制造历史最悠久的公司。

天生亮企業有限公司 / TIAN SHENG LIANQ INDUSTRY CO.,LTD

5.1B0-01

Address: 台湾地区 新北市-林口區-忠孝路504巷21號 Taiwan Region, New Taipei City 244- Linkou Dist.,-No.21, Ln. 504, Zhongxiao Rd.,
Tel: 886+226087111
Email: a2601.b5028@msa.hinet.net
Web: www.homelife.com.tw

台湾葡吉园国际企业有限公司 / PU CHI YUAN PTE. LTD.

5.1B0-03

Address: 台湾地区 Taiwan Region, China 新北市-新北市板桥区中正路275巷18号
Tel: 0229666636
Email: 3511687868@qq.com
Web:

IZENCO.,LTD

5.1B0-06

Address: 韩国 韩国京畿道金浦市月串面古墓里3-12 ROK(Republic of Korea) Korea gyeonggi province, gyeonggi province, gyeonggi province, Korea
Tel: 021-54223100
Email: 1956045686@qq.com
Web: www.bidetchina.com

IZEN与韩国三星，KELIM等企业合作供货，在行业内首次获得医疗器械证书，全球认可的质量，面向36个国家进行出口。
IZEN has cooperated with samsung, KELIM and other enterprises in South Korea to supply products. It has obtained the medical device certificate for the first time in the industry, and the quality recognized globally. It is exported to 36 countries.

富士工业株式会社 / FUJI INDUSTRIAL CO.,LTD.

5.1B1-02

Address: 日本 神奈川县-相模原市-中央区渊野边2-1-9 Japan Kanagawa-ken-Sagamihara-shi-2-1-9 Fuchinobe, Chuo-ku
Tel: +86(0)21-3251-7269
Email: l-jiang@fujioh.cn
Web: www.fujioh.com（日文）；www.fujioh.cn（中文）www.fujioh.com（japanese）；www.fujioh.cn（chinese）

富士工业株式会社创建于1941年，制造以吸油烟机为代表的厨房电器。公司始终秉持着严格的质量要求，占有日本家用吸油烟机市场的重要份额。
Fuji Industrial is a Japanese company with a history dating as far back as 1941. Our cooker hoods and other products have long been popular in Japan, where we have a leading share of the household cooker hood market.

澳大利亚智能穿戴健康产业有限公司

5.1B0-04

Address: 澳大利亚 Australia NSW-Hurstville-Level 1,213Forest Rd
Tel: 0426288567
Email: 1976798093@qq.com
Web: www.auchris.com

澳大利亚智能穿戴健康产业公司坚持“智能化+产业化+品牌化”发展理念，是一家集自主研发、设计生产、销售服务为一体的全球智能高新企业。总部位于澳大利亚悉尼，下设AUChris国际品牌，研发产品有：恒温加热、运动监测、保健理疗、防晒散热四大系列。特别在首届中国进出口博览会深全球受展商青睐，央视、腾讯、世界科技网等媒体报道。

Electro Cirkel Retail B.V.

5.1B0-07

Address: 荷兰 Netherlands Rotterdam-Lyonstraat 29, 3047AJ
Tel: +86 572-8289782
Email: l.Zhou@electrocirkel-china.com
Web:

Creators of Ambiance.
CALEX is a Dutch professional lighting brand which start from 1970. CALEX, Creators of Ambiance.

YOSHIKAWA CORPORATION

5.1B1-03

Address: 日本 Japan NIIGATA-NISHIKANBARA-GUN-NO.635-3, OHDO, YAHIKO,
Tel: 81-256-91-2222
Email: r-kato@yoshikawa-group.co.jp
Web: www.yoshikawa-group.co.jp/kitchen

YOSHIKAWA CORPORATION是以做家庭用品为主来设计、开发、销售的提案型创造企业。敏感的观察时代的流行及需求变化，进行市场分析，开发出让顾客满意的商品，并将这些商品送到顾客的手上。我司技术与燕三条的产业技术互相融合，运用有传统及历史基础的技术来制成金属加工商品，我们相信能以过去的信赖和实际功绩来继续建立和发展，及了解顾客需求。

GRAND FRONTIER ENTERPRISE SDN BHD

5.1B0-05

Address: 马来西亚 Malaysia Kuala Lumpur-Cheras-D'Alamanda-Block D-06-05, Pudu Impian IV, Jalan Pudu Ulu,
Tel: +603-27713945
Email: grandfren@gmail.com
Web:

"新潮流古董型熨斗
- 本体以最高级曲面印刷处理
- 底座以最高级钛合金处理
- 不变形，不褪色，耐用20年"

林内株式会社 / Rinnai

5.1B1-01

Address: 日本 国爱知县-名古屋市-中川区福住町2-26 Japan Guoaichi County-Nagoya City-Fujuding 2-26, Zhongchuan District
Tel: 020-38217976
Email: maggie@gzrinnai.com.cn
Web: www.gzrinnai.com.cn

日本林内株式会社成立于1920年，拥有百年历史，是日本国内燃气具生产企业中最强大的集团公司之一。在日本拥有13个工厂外，还在世界各国拥有30多家生产或销售公司，林内集团每年销售超过1500万台。本次博览会上将会展出林内集团在世界各国生产制造的高端家用厨房电器、商用厨房设备；家用、商用热水器和热水系统，也会有新产品在本次博览会上进行首发仪式。
Founded in 1920, Japan Linnei Co., Ltd. has a history of 100 years. It is one of the most powerful group companies in domestic gas appliance manufacturing enterprises in Japan. In addition to 13 factories in Japan, there are more than 30 production or sales companies in the world. Linnei Group sells more than 15 million units annually.

Vogel's Products BV

5.1B1-04

Address: 荷兰 Netherlands Noord-Brabant-DB Eindhoven-Hondsruglann 93
Tel: 18936899637
Email: d.zhou@vogels.com
Web: www.vogels.com

荷兰品牌，46年致力于研发、设计及制造美学及功能性兼备的视频/音频及多媒体支架类产品，欧洲行业领军者。

AMERICA COOK CORP

5.1B1-05

Address: 美国 United States of America RIVERSIDE CA92505-4533LANDEEN CT
Tel: 13516941111
Email: brand@amercook.us
Web: www.amercook.us

位于加州的美国库克公司是一家成功的拉丁美洲公司。阿米尔是其名下品牌。自成立以来，阿米尔一直致力于为消费者提供高品质、高价格的具有艺术设计的厨房用具。
设计能充分照顾到广泛的品味，生活方式和预算，且易于使用和照顾的产品，让客户高兴。
阿米尔专注于厨具的不同领域:炊具、酒具、餐具等。
America Cook Corporation, located in California, is a successful Latin American company.
Since its inception, Amercook has been committed to providing and manufacturing high-quality and good price with artistic design kitchen utensils for consumers.
Designed to comfortably fit a wide range of tastes, lifestyles and budgets with easy to use and care for products that delight the customer.

Vaillant Group Heating, Cooling and Environmental Technology Co., Ltd.

5.1B2-01

Address: 德国 Germany Remscheid-Berghause Str.40
Tel: 60287992
Email: Danting.Gu@vaillant-group.com
Web:

Founded in Remscheid in 1874, the Vaillant Group today supplies innovative hot water, room heating and cooling solutions to countries all over the world. Our company develops high-efficiency products that save energy, conserve resources and enhance people's quality of living.

Metz Consumer Electronics GmbH

5.1B2-04

Address: 德国 Germany Freistaat Bayern-Zirndorf-Ohmstraße 55-90513
Tel: 16675579406
Email: wangjunxiang@skyworh.com
Web: www.metz-ce.de

美兹（METZ），成立于1938年，是德国电视机品牌。主要经营业务是电视机、闪光灯等消费类电子产品。美兹于1955年开始设计生产电视机，1967开始生产color TV，2012年开始生产Smart TV。

SCHOTT

5.1B1-06

Address: 德国 Germany RLP-Mainz-Hattenbergstr. 10
Tel: +862133678000126
Email: sandy.wang@schott.com
Web: schott.com

肖特是一家在特种玻璃和微晶玻璃行业领先的跨国高科技集团公司。凭借130多年来所累积的经验以及在研发、材料和技术领域的杰出能力，我们可为客户提供一系列广泛的高品质产品和解决方案。肖特是众多行业的创新引擎，包括家用电器、医药、电子、光学，汽车及航空行业等。

德国伯爵公司 / August Brötje GmbH

5.1B2-02

Address: 德国 下薩克森州-拉斯特德-奥古斯特伯爵大街17号 Germany Rastede-August-Brötje-Straße 17
Tel: +86 10 65888700
Email: weiming.zheng@bdrthermeachina.com
Web: www.broetje.de

德国伯爵在供暖技术领域拥有100年的丰富经验。公司历史中烙下了创新型和高品质产品的深深烙印。这些成果基于供暖技术的知识储备和非同寻常的工作效率。德国伯爵在公司历史上开发了燃气、燃油、固体材料供暖系统和太阳能设备的诸多新技术和新产品。通过这些面向未来的研发产品，特别是燃烧值技术领域的研发产品，为公司不断带来新的动力并取得了巨大的成功。
BRÖTJE is a member of the BDR Thermea Group, one of the world's leading manufacturers of heating technology. By working closely with BDR Thermea throughout Europe, BRÖTJE will continue to be able to innovate, launching new products in the heating technology market in the future.

SAMSUNG

5.1B3-01

Address: 韩国 ROK(Republic of Korea) Gyeonggi-do, -Suwon-si-Samsung-ro 129, Yeongtong-gu
Tel: 010-65668100
Email: rui.bian@samsung.com
Web: www.samsung.com/cn

创办于1938年的三星，涉及电子、金融、重工等众多领域，旗下的三星电子、三星物产、三星生命等均进入世界500强。
三星于1992年中韩建交伊始正式进入中国。截止2018年，共投资中国26家生产工厂、7大研发中心等100余家分支机构，员工总数达8.5万名，其中研发人员5千余人。

Miji GmbH

5.1B1-07

Address: 德国 Germany Miji GMBH Westerwaldstraße 8 35781 Weiburg Geramny
Tel: 021-51692010
Email: ping.song@miji.com.cn wenbing.zhou@miji.com.cn
Web: www.miji.com.cn

Miji GmbH, developing,manufacturing and selling premium kitchen appliances to iddle-class and upper-middle-class customers, its products mainly are Hobs and Stoves (including radiant stoves and induction stoves), core brands are "Miji Design", "Miji Home" and "Miji Pro".

ZOJIRUSHI CORPORATION

5.1B2-03

Address: 日本 Japan OSAKA-20-5,TENMA 1-CHOME,KITA-KU,
Tel: 8621-61907755
Email: sunheng@zoshanghai.com.cn
Web: zojirushi-china.com

象印品牌的历史可以追溯到1918年制造的第一个玻璃内胆真空保温瓶。
在多年的不懈钻研努力下，象印已经成为家用电器（如真空保温瓶和电饭煲）的顶级制造商，并一直致力于利用最新的技术，创造出一系列不断发展的前沿产品，使生活更加舒适和方便。
The history of the Zojirushi mark goes back to a glass-lined vacuum bottle manufactured in 1918. In the years since then, Zojirushi has become a top manufacturer of house hold items such as vacuum bottles and electric rice cookers, and is always trying to leverage the latest technologies to create a constant stream of leading-edge products that make life more comfortable and convenient.

株式会社理光 / RICOH COMPANY, LTD.

5.1B3-02

Address: 日本 东京-东京-大田区中马边1-3-6 Japan Tokyo-Tokyo-1-3 6, Nakamagome Ohta-ku
Tel: 021-52380222*8237
Email: sarahwang@rcn.ricoh.com
Web: www.ricoh.com

理光集团，总部位于日本东京，在全球200多个国家和地区开展业务。2019财年总销售额约为181亿美金。在过去80多年的历程中，理光始终保持创新，并引领着文档管理,IT服务,智能通讯,商业和工业印刷,数码相机和工业系统等领域的发展。
Headquartered in Tokyo,Ricoh Group operates in approximately 200 countries and regions. In the financial year 2019, Ricoh had worldwide sales of 18.1 billion USD. For more than 80 years, Ricoh has been driving innovation and is a leading provider of document management solutions, IT services, communications services, commercial and industrial printing, digital cameras, and industrial systems.

Foxconn Singapore Pte Ltd

5.1B3-03

Address: 台湾地区 Taiwan Region, China-XINBEI-No. 2 Freedom Street, Tucheng District
Tel: 13622350448
Email: fang.cai@foxconn.com
Web: www..foxconn.com.cn

Foxconn Technology Group is a high-tech enterprise specializing in the research and manufacture of 3C products such as computers, communications, consumer electronics, etc. It is widely involved in the development and application of digital content, automotive components, access, cloud computing services and new energy and new materials.

博西家用电器集团 / BSH Hausgeraete GmbH

5.1B4-03

Address: 德国 拜仁-慕尼黑-卡尔维利街 34号 Germany Bayern-Munich-Carl-Wery-Str. 34
Tel: 025-87762653
Email: yang.yangyan3@bshg.com
Web: www.bsh-group.com

博西家用电器集团(简称:博西家电)是欧洲知名的家电产品制造商,也是全球家电行业的领导者之一。博西家电旗下拥有13个品牌,满足消费者的不同需求。经过50多年的发展,博西家电已由一家德国本土公司壮大成为全球第二大家电制造商。博西家电始终坚持以消费者为中心的发展战略,紧紧围绕提升消费者生活品质的原则来开展各项业务。

BSH Hausgeräte GmbH is a well-known manufacturer of home appliances in Europe and one of the leading companies in the sector worldwide. With a portfolio of 13 brands, BSH covers a wide range of consumer needs. Over its 50-year history, the company has grown from a German exporter into the world's second-largest home appliance manufacturer.

LAURASTAR SA

5.1B5-03

Address: 瑞士 Switzerland Châtel-St-Denis-Laurastar Consumer Service Route de Pra de Plan 18 1618
Tel: 0755-23604860
Email: laurastarchina@dingxintech.com
Web: www.laurastar.cn

在全球,深受达官贵人、演艺明星、商务精英、名人名流所青睐的LAURASTAR于1980年在瑞士创立。39年专注于熨烫技术的研发与创新,是服装熨烫护理系统的开拓者,更享有“百年瑞士八大发明之一”的美誉,荣获多项全球技术发明专利,代表着世界熨烫行业的发展方向,是生活品质的象征。

Laurastar was founded by people who loved beautiful fabrics in 1980. Their passion led them to create a unique world bringing together beauty and Swiss technology to enhance your clothes and your appearance. With one objective: to make them accessible to all.

Laurastar are well-received over forty countries, making the company a global leader in professional ironing systems for domestic use.

Panasonic Corporation

5.1B4-01

Address: 日本 大阪府-门真市-〒571-8501 大阪府门真市大字门真1006番地 Japan Osaka -Kadoma-1006, Oaza Kadoma, Kadoma-shi, Osaka 571-8501, Japan
Tel: 010-65626100
Email: lihuilian@cn.panasonic.com
Web: panasonic.cn

松下电器产业株式会社成立于1918年从事零部件、家用电器、FA设备、通信设备以及住宅相关设备等的生产、销售、售后服务。

Comprehensive electronics manufacturer: production, sales, and services for products ranging from electronic components to home electronic equipment, electrical appliances, factory automation (FA) equipment, information/communications equipment, and housing equipment.

SMEG S.P.A

5.1B5-01

Address: 意大利 Italy VIA LEONARDO DA VINCI, 4 42016 GUASTALLA (RE) ITALY
Tel: +86 10 84405535
Email: umekozhao@yeah.net
Web:

阿尔弗雷德·卡赫欧洲两合公司 / Alfred Karcher SE & Co. KG

5.1B5-04

Address: 德国 巴登-符腾堡州-斯图加特/温嫩登-阿尔弗雷德卡赫街28-40号 Germany Baden-Württemberg-Stuttgart/Winnenden-Karcher Street 28-40 71364
Tel: 02150768077 / +862150768077
Email: lingrong.kong@karcher.cn
Web: www.karcher.cn

德国卡赫1935年诞生于德国温嫩登,是全球最大的清洁设备和清洁解决方案提供商之一。84年来,凭借创新超前的研发体系、臻至完美的品质理念,卡赫已为全球数百万追求专业高效的企业用户提供持续可靠的清洁保障,同时更成为世界数十亿热爱生活、追求品质的家庭所信赖的清洁伙伴。

Alfred Kärcher GmbH & Co. KG was born at Winnenden, Germany in 1935, is one of the largest cleaning equipment and solution providers in the world. In the past 84 years, with its innovative R&D system and perfect quality concept, Kärcher has provided continuous and reliable cleaning protection for millions of professional and efficient corporate users around the world.

通用家电 / GE Appliances

5.1B4-02

Address: 美国 United States of America Kentucky-Louisville-Appliances park
Tel: 18053289660
Email: zhanww@haier.com
Web: www.geappliances.cn

美国通用家电(GE Appliances),源自美国通用电气公司(GE),前身可追溯至爱迪生创建的爱迪生电灯公司。一百多年来,美国通用家电致力于改变人们的生活方式,以无数个“第一次”的发明,满足用户多样化的生活需求,使人们的生活变得更加现代化、智能化。

GE Appliances, originating from General Electric more than 100 years ago, has electrified and modernized life with the invention of countless industry firsts that have changed the way people live and how they experience home.

阿奇力克 / ARCELIK AS

5.1B5-02

Address: 土耳其 伊斯坦布尔-Karaagac Caddesi No.2-6 Turkey Istanbul-Karaagac Caddesi No.2-6
Tel: 021 62674461-477247
Email: owen_liang@beko.com
Web:

阿奇力克隶属世界五百强考奇集团旗下,拥有三万多名员工在全球建有18个生产基地和34家子公司。旗下11个国际家电品牌,产品和服务遍及145个国家和地区。

Arçelik A. . offers products and services around the world with its 30,000 employees, 18 different production facilities in 7 countries, its 34 sales and marketing companies in 32 countries all over the world and its 11 brands serving products and services in more than 145 countries.

株式会社浅川高洁 / Asakawa Qualiness Co., Ltd.

5.1B6-01

Address: 日本 九州-福岡市-福岡県糟屋郡粕屋町大字2530番地1 Japan Kyusyu-Fukuoka-1-2530Etsuji, Kasuyagun Kasuyamachi
Tel: ＋81926269899
Email: wison999@hotmail.com
Web: qualiness.co.jp

株式会社浅川高洁是一家专注于光触媒产品研究、开发、生产,光触媒喷涂施工及其他环保,保洁产品销售的科技企业,研发基地设立于日本九州,商品广至日本全国各地,家喻户晓。公司技术和研发实力雄厚,被业内专家誉为“有实力且良心,有机会打造成上市公司之一”。

Asakawa Gaojie Co., Ltd. is a scientific and technological enterprise focusing on the research, development and production of photocatalyst products, photocatalyst spraying construction and other environmental protection, cleaning products sales.

Japan maeda bisiness co.,ltd

5.1B6-02

Address: 日本 Japan nagoya3-7-9 japan
Tel: 021-33531880
Email: 15601804523@163.com
Web:

Our company is a trading company,which is engaged in import and export technology and products.

Marvelous Inc.

5.1B6-05

Address: 日本 Japan Tokyo-SHinagawa Seaside East Tower,4-12-8,Higashi-Shinagawa,Shinagawa-ku,
Tel: +81.3.5769.7450
Email: yamazakim@marv.jp
Web: www.marv.jp

BLENDTEC INC.

5.1B6-08

Address: 美国 United States of America Utah-Orem-1206 S.1680 W.
Tel: +86 10 84405535
Email: umekozhao@yeah.net
Web:

Fakir Elektrikli Ev Aletleri Dis Tic. AS (Fakir Hausgeräte GmbH)

5.1B6-10

Address: 德国 Germany 34303 Istanbul-Basin Ekspres Yolu No. 39
Tel: +497042.912187
Email: andrea.mayer@fakir.de
Web: www.fakir.deandwww.fakir.com.tr

Fakir is specialized in manufacturing equipment for household appliances and industrial floor care since more than 85 years. Fakir defines itself through development – construction – design – production. Quality makes no compromises which is why Fakir still produces in Germany and Turkey.

有限会社 田中印刷所

5.1B6-03

Address: 日本 Japan 滋贺-彦根-1042-1 小泉町
Tel: +81-749-22-0362
Email: yuichi@tanakaprint.co.jp
Web: www.tanakaprint.co.jp

日本有名古城的彦根城附近企业。主要开发,设计,生产背投式立体屏幕方式虚拟主持人。

Bushiroad

5.1B6-06

Address: 日本 Japan 2F Sumitomo Nakanosakaue Bldg., 1-38-1 Chuo, Nakano-ku, Tokyo
Tel: +81-3-4500-4852
Email: mou@bushiroad.com
Web: bushiroad.com

思博迪电器(香港)有限公司 / SUBADA ELECTRIC APPLIANCE (HONGKONG) CO., LIMITED

5.1B6-09

Address: 香港地区 九龙旺角花园街2-16号好景商业中心2709室 Hong Kong ROOM 09 27/F HO KING COMMERCIAL CENTRE 2-16 FA YUEN STREET MONGKOK KL
Tel: 00852-65776568
Email: sales@subadahk.com
Web: www.subadahk.com

Kitnod New Material Technology Co,Limited

5.1C0-01

Address: 香港地区 荃湾横龙街43-47号利达工业大厦11楼1108室 Hong Kong Region, Room 1108, 11/F Lucida Industrial Building 43-47 Wang Lung Street, Tsuen Wan, Hong Kong
Tel: 8615710782001
Email: danny@jetchampfilt
Web:

西哲株式会社 / Sezze Company Limited

5.1B6-04

Address: 日本 大阪-高槻市-三島江 Japan Osaka-Takatsuki-Mishima E28-2
Tel: +85251232346
Email: sezzejp@163.com
Web:

Sezze株式会社西哲,总部位于大阪西区立壳墟,成立时间 2005年,主要经营家庭电器,公司以人为本的设计理念和风格,多年来赢得各大日本及海外的客户信赖。

日本株式会社西哲,是一家专门开发和销售自主品牌“sezze”的日本中小家电企业,与日本近数百家的客户有良好的合作关系,如世界第二大的电器销售商山田电器、年销售额过千亿日元位居全日本前列的Cainz、上新电机、Beisia、Amazon等都是其长期客户。公司近年在海外成立各大区域事业部,包括亚洲区香港西哲株式会社、中国大陆区深圳前海西哲智能科技有限公司。

认知应用工程有限公司 / ACE Applied Cognitive Engineering Ltd.

5.1B6-07

Address: 以色列 Israel Tel Aviv-Hod Hasharon-5 Habanai St.
Tel: 021-63303602
Email: danny@intelligym.com
byronma@jusstech.com
Web:

ACE通过提高球员的大脑技能来提高运动成绩。我们使用由NASA, DARPA和以色列空军科学证明的基于计算机的训练技术。我们的训练平台IntelliGym已经证明可以将实际现场球员的表现提高20-30%。超过50,000名付费用户从专业人员到10岁儿童一直采用该计划。

ACE improves athletic performance by boosting players' brain skills. We use computer-based training technology that is scientifically proven by NASA, DARPA and the Israeli Air Force. Our training platform, the IntelliGym, has shown to improve actual on-field players' performance by 20-30%. Over 50,000 paying users have adopted the program all the way from professionals to 10 year olds.

驊盛車用電子股份有限公司 / Wieson Automotive (Taiwan) Co., LTD.

5.1C0-02

Address: 台湾地区 汐止區-新北市-大同路一段276-1號7樓 Taiwan Region, New Taipei City-Xizhi Dist.-7F., No.276-1, Sec. 1, Datong Rd.
Tel: 886-2-2647-3055
Email: sales_auto@wieson.com
Web: www.wieson-auto.com

驊盛車電團隊,二十年來專注在六個車電解決方案,包括車用連接器解決方案、車用線束解決方案、ADAS 週邊感測連接解決方案、車載天線系統解決方案、車載資料傳輸/充電解決方案、車載資通訊/ADAS解決方案,目前已經為15家國內外OE車廠提供服務,向全球國際Tri1 車電大廠提供 OEM/ODM服務。

Wieson Automotive had been dedicating on manufacturing and developing in 6 major solutions for over 20 years - Automotive Connector Solution, Automotive Wire Harness Solution, ADAS Interconnect Solution, Automotive Antenna Solution, Automotive data comm./ Charging Solution.

淞丰行

5.1C0-03

Address: 台湾地区 Taiwan Region, China 苗栗市-360苗栗县苗栗市县府路100号
Tel: 037-559890
Email: 3511687868@qq.com
Web:

Ferlab Sdn Bhd

5.1C0-04

Address: 马来西亚 吉隆坡-吉隆坡-10-2 Jalan Damai Perdana 1/8A bANDAR damai Perdana, 56000 Cheras, Kuala Lumpur. Malaysia Kuala Lumpur-Kuala Lumpur-10-2 Jalan Damai Perdana 1/8A bANDAR damai Perdana, 56000 Cheras, Kuala Lumpur.
Tel: +60124100541
Email: richard.ben@gmail.com
Web:

VESTEL TRADE CO

5.1C1-01

Address: 土耳其 Turkey Manisa-Organize Sanayi Bolgesi
Tel: +90 534 517 30 55
Email: vdt-marketing@zorlu.com
Web:

Istanbul Chemicals and Chemical Product Exporters Association (IKMIB)

5.1C1-01

Address: 土耳其 Turkey stanbul-Sanayi Cad. Cobancesme Mevkii Dı Ticaret Kompleksi No:3 A Blok Yenibosna/ Bahcelievler
Tel: +902124540000
Email: seyma.inam@immib.org.tr
Web: www.ikmib.org.tr

Istanbul Chemicals and Chemical Products Exporters' Association (IKMIB) is a professional establishment which deals with all of the export activities of its members. The main aim of the Association is to increase the export volume of Turkish Chemicals and Chemical Products Sector. IKMIB bolsters its members in the national and international level via different activities.

Active Lifestyle

5.1C1-02

Address: 新加坡 Singapore 9 LUCKY RISE SINGAPORE (467516)
Tel: 012-63543488
Email: zoe@active.cn
Web: www.active.cn

As our name implies, Active Lifestyle's mission is to provide, enhance and encourage people of all ages to be physically active and fit throughout life. Established since 1995 in Singapore, we specialize in the supply of fitness & gym equipment.

太乙堂(新加坡)有限公司 / TAI YI TANG PTE LTD

5.1C1-02

Address: 新加坡 Singapore 50 BUKIT BATOK ST 23 #03-19
Tel: +6563333339
Email: CRYSTAL@TAIYITANG.COM.SG
Web: www.taiyitang.com.sg

太乙堂(新加坡)有限公司是在新加坡注册成立的制造公司。太乙堂以优质中草药为原料，利用精油提取珍贵活性成分，形成油、香脂、乳液、凝胶、乳脂等原材料，进而制成太乙堂系列中草药膏。太乙堂以尖端科技对中草药秘方进行现代演绎，缔造和谐、平衡、全面的理疗产品。疼痛和不适正逐步侵蚀现代人的生活，市场从未如此渴求有效的理疗产品。
Tai Yi Tang Pte Ltd is a 2nd generation manufacturing company based in the Republic of Singapore. Our company produces a range of Herbal Medicated Ointment and Balm. We infused high-quality Traditional Chinese Medicine in essential oil and extracts precious active ingredients. Our unique formulations create harmonious, balanced and well-rounded therapeutic properties.

EUBIQ HOLDINGS PTE LTD

5.1C1-02

Address: 新加坡 Singapore-9 JOO KOON CRESCENT SINGAPORE 629025
Tel: +65 63729393 / +86 07563293448
Email: JOZUAPUNG@EUBIQ.COM yewjinfoong@qq.com
Web: www.eubiq.com

Eubiq was founded in 2000 with the vision of becoming the world leader in the new generation of power outlet system. Eubiq invented and patented the GSS power outlet system in 2000. This track-based and ultra-flexible system was awarded worldwide patents since 2003. Headquarters in Singapore

Alteco Chemical Pte Ltd

5.1C1-02

Address: 新加坡 Singapore 639084-19 Tuas Avenue 11
Tel: 65-68620377
Email: sales@alteco.com.sg
Web: www.alteco.com.sg

We are the manufacturer of “ALTECO” brand adhesive, sealant, paint marker products. We produce a wide range of super glue, epoxy, industrial glue, RTV silicone gasket maker, silicone sealant, paint marker and etc. ALTECO CHEMICAL PTE LTD is a member of ALTECO GROUP OF COMPANIES, JAPAN, one of the foremost cyanoacrylate adhesive (commonly known as Super Glue) manufacturers in the world.

Suntar Technology Investment Pte Ltd

5.1C1-02

Address: 新加坡 Singapore 10 Ang Mo Kio Street 65 Techpoint #06-10 Singapore 569059
Tel: 13915563564 / 13918555584
Email: jiayang.zhu@siyuanwater.org yiko.cao@siyuanwater.org
Web: www.suntar.com

Suntar Technology Investment Pte Ltd国际知名的膜技术应用解决方案提供商，以纳滤、超滤、生物膜反应器等各类膜技术的开发与应用为核心，致力于清洁生产、循环经济、水质净化和节能环保等领域。核心业务为工业生产过程中的分离纯化，工业废水处理和中水回用、市政污水处理等领域的膜法水处理以及民用净水机的开发、生产和销售。
新加坡三达国际集团(简称“三达集团”)是一家全球领先的以膜技术开发与应用为核心的高科技投资与运营企业，在海内外投资的全资和控股子公司超过50家，其投资领域涉及膜技术与水处理、食品与生物医药、林产资源与化工三大板块。

维和私人有限公司 / Wei Her Pte Ltd

5.1C1-02

Address: 新加坡 Singapore 349561-Singapore-53 Genting Lane
Tel: 65-67433191
Email: export@weiher.com.sg
Web: www.weiher.com.sg

DIRECT FACTORY PRICES –Wei Her Pte Ltd was established in 1979. With 40 years of experience in the hair and beauty industry, we are the market leaders in manufacturing result proven, safe and effective hair grower tonics, skin serums, ampoules and medicated oils. Our factory is GMP certified by the Health Sciences Authority of Singapore.

OSIM International Pte Ltd

5.1C1-02

Address: 新加坡 Singapore Singapore-65 Ubi Ave 1, OSIM Headquarters
Tel: +65-63182764
Email: alantan@osim.com.sg
Web: www.osim.com

Established in 1980, OSIM is a global leader in branded healthy lifestyle products, focusing on consumers' well-being. Its core business comes under 4 categories – Relax & Relief, Tone & Shape, Clean & Purify, Check & Measure. Each category carries the theme of well-being, lifestyle & positive attitude. Together, they reflect OSIM's holistic & integrated approach to a healthy lifestyle.

Ugel Cosmetics Pte Ltd

5.1C1-02

Address: 新加坡 Singapore Singapore-53 Genting Lane, Singapore 349561
Tel: 6567433191
Email: grace.ling@ugel.com.sg
Web:

MANUFACTURE & WHOLESALES OF COSMETICS AND TOILETRIES

Pearlie White Pte Ltd

5.1C1-02

Address: 新加坡 Singapore-7030 Ang Mo Kio Ave 5, #06-36/39 Northstar @ AMK
Tel: 6288 2277 ext 200
Email: leeleequek@corlison.com
Web: www.pearliewhite.com

As a home-grown brand, Pearlie White is proud to be the only oral care brand that manufactures in Singapore for toothpastes and mouth rinses. With over 60 oral care products in the range, Pearlie White caters to oral care needs as diverse as teeth whitening, tooth sensitivity and gum care for all ages.

Vino Fontaine Pte.Ltd

5.1C1-02

Address: 新加坡 Singapore 7 Temasek Boulevard #12-02C, Suntec Tower One
Tel: 18616826005
Email: echo@santus.wine
Web: www.santus.wine

Santus is singapore based comapany dealing with premium wine dispenser. SANTUS ,desinged by French team, keeps an opened bottle of wine preserved and fresh for 2 weeks. This gives the consumer the freedom to drink at their pace, and opens up a whole new market for businesses to take advantage of to enhance their service.

BLUM & CO PTE LTD

5.1C1-02

Address: 新加坡 Singapore -77 KAKI BUKIT INDUSTRIAL TERRACE SINGAPORE 416157
Tel: (+65) 6358 2127
Email: lucas@blumnco.com
Web: www.blumnco.com

BLUM是力量与美丽的语言。从一个优雅的生活开始，绽放微妙的采光。精心为现代东方女性设计制作，每一件BLUM单品，充分体现品牌的经典剪裁与现代风格；适合她在生活里所扮演的每个角色，她所寻找的所有难忘经历。BLUM散发着芳香女人味，总是让人耳目一新。因为对BLUM女性而言，不只是她穿什么，而是她在述说一个怎样的故事。
Established 27 years ago, Blum & Co is an admired brand created for professional women. Made with quality fabrics, each cut and trim is executed to our exacting standards with Asian proportions in mind to produce a well-made professional statement, inspired culturally with a confident femininity. Beyond a label, we believe that our business and deeds can influence positive change in the world.

丰源(渔具)私人有限公司 / HONG GUAN (TACKLE) PRIVATE LIMITED

5.1C1-02

Address: 新加坡 乌美街3段33号8楼51室 (Vertex Tower A) Singapore 33 Ubi Ave 3 #08-51(Vertex Tower A)
Tel: (65) 6742 2678 / (65)6742 2678
Email: sales@pioneertackle.com
Web: www.pioneertackle.com

丰源渔具公司成立于1942年，总部位于新加坡，始于五金、捕鱼网零售。1997年创立自有品牌PIONEER，挎型进军国际渔具市场，专业从事渔具产品研发生产和经营销售。分公司位于马来西亚，泰国及印尼，庞大的研发实力及产品阵容覆盖整个亚洲及全球二十多个国家且持续成长中。PIONEER秉持着自主研究、自发创新的宗旨，以满足不同市场需求为己任，向全世界渔具经销领域之领导者迈进。
Hong Guan (Tackle) was established in 1942,Our proprietary brand – "Pioneer Tackle" was launched in 1997 headquartered in Singapore and subsidiaries in Malaysia and Thailand. Our distribution and export network covers more than 28 countries cruising towards the South East Asian market leader in fishing tackle distribution.

Foh Foh Co Pte Ltd / Foh Foh Co Pte Ltd和和商业私人有限公司

5.1C1-02

Address: 新加坡 Singapore 2 Pandan Avenue, Foh Foh Building
Tel: +65 62782188
Email: andrew@fohfoh.com
Web: www.fohfoh.com

Foh Foh Corporation was established in 1970. ALGO brand has been founded since 1990s, specializing in plastic houseware & kitchenware such as jumbo stockers, wagons, shoe racks, bathroom racks and many other storage solution products. Designed and manufactured in Singapore using pure plastic resin, toxins-free & highly durable. Our export market includes Asia, Middle East, Europe, USA, etc.

Singapore Business Federation

5.1C1-02

Address: 新加坡 Singapore Singapore-Singapore-160 Robinson Road #06-01 SBF Center Singapore 068914
Tel: +6568276881
Email: jiawei.wong@sbf.org.sg
Web: www.sbf.org.sg

As the apex business chamber, SBF champions the interests of the business community in Singapore in trade, investment and industrial relations. SBF not only acts as the bridge between businesses and government to create a conducive business environment; But also represents the business community in bilateral, regional and multilateral fora for the purpose of trade expansion and business networking

威润科技股份有限公司 / ATrack Technology Inc.

5.1C1-03

Address: 台湾地区 台北市-内湖区内湖路一段120巷13号8楼 Taiwan Region, Taipei City-8F., No. 13, Ln. 120, Sec. 1, Neihu Rd., Neihu Dist.
Tel: +886-2-2797-5852
Email: sales@atrack.com.tw
Web: atrack.com.tw

威润科技是由一群专精在卫星定位智能车载终端(GPS Tracker)系统设计、研发与製造超过15年的团队在2010年所成立，成立仅5年即挂牌上市，是台湾地区唯一挂牌上市且荣获国家指标性奖项「磐石奖」的卫星定位监控器製造商。威润集团多元佈局，除了智能车载终端、智能车载资通系统盒(车载T-BOX)的设计与开发外，更积极佈局智慧医疗及生技版图。
ATrack(TPEX: 6465) is a world-class telematics company in the fleet and asset management market place and is one of the 500 fastest growing companies in Asia recognized by Deloitte. Besides GPS trackers designing and manufacturing, ATrack has also extended the operations to smart healthcare and biomedical science.

旧金山湾区委员会 / Bay Area Council

5.1C2-01

Address: 美国 加州-旧金山-萨克拉门托大街353号10楼 United States of America California-San Francisco-353 Sacramento St., 10th Floor
Tel: 17621807666
Email: khuang@bayareacouncil.org
Web: www.bayareacouncil.org

旧金山湾区委员会(Bay Area Council)成立于1945年，是一家服务于湾区九个郡县、由商界赞助的政策倡导机构。湾区委员会有来自包括旧金山市与硅谷等地三百多家国际知名大型企业的支持，并由他们的首席执行官或高层管理人员出任湾区委员会委员，共同致力于该区域的经济发展、商业繁荣及民生质量的改善。
The Bay Area Council is a business-sponsored public policy advocacy organization for the nine-county Bay Area founded in 1945. Over 300 of the largest enterprises in the region support the Council by offering their CEOs and top executives to represent their companies to shape the future, jointly advocating for a strong economy, a vital environment, and a better quality of life for everyone.

Aussie Qphoenix International Trading

5.1C2-04

Address: 澳大利亚 昆士兰-昆士兰-48 Station road indooroopilly QLD Australia Queensland-Queensland-48 Station road indooroopilly QLD
Tel: 61402159026
Email: info.aqptrading@gmail.com
Web:

威刚科技股份有限公司 / ADATA Technology Co., Ltd

5.1C1-04

Address: 台湾地区 中和區-新北市 Taiwan Region, ADATA Technology Co., Ltd. Address: 2F., No.258, Liancheng Rd., Zhonghe Dist., New Taipei City 235, Taiwan (R.O.C.)
Tel: +886-2-8228-0886
Email: shuyu_lin@adata.com
Web: www.adata.com

ADATA Technology is the world's second largest vendor of DRAM memory modules, ranks among the top 20 international brands from Taiwan, and holds over 500 memory-related patents. ADATA's main product lines include memory modules, USB flash drives, memory cards, solid state drives, and portable hard drives.

陆易斯通国际生态城市开发集团有限公司 / Luistone International Eco-city Development Holdings Limited

5.1C2-02

Address: 美国 洛杉矶奥林匹克大厦西11845室 United States of America 11845 W.01ympic Blvd,Suite 900 LosAngeles
Tel: 028-85512531
Email: lstone@vip.sina.com
Web: www.usalst.com

木兰网(香港)互联网技术有限公司 / MULANNET (HONGKONG) INTERNET TECHNOLOGY CO., LIMITED

5.1C2-05

Address: 香港地区 HONGKONG Region.-MONGKOK,KL-RM 1005,10/F,HO KING COMMERCIAL CENTRE,2-16 FA YUEN STREET
Tel: 0755-86955020
Email: fanghui@mulanmall.com
Web: www.mulanmall.com

木兰网，全球化人文垂直家具新零售平台。我们致力于传播中华传统文化、东西方文化及现代文明的融合发展，注重中国方案与文化科技价值的弘扬，构建互联网技术与家具家居行业的深度融合及线上全场景智慧赋能，旨在创造美好生活，发现世界之美，追求“人文木兰网”优秀价值品鉴，秉持奋斗者精神，见证伟大时代多元文明交流互信的历史和未来，绽放卓越绿色、智慧协同、互联共享的平台魅力。

Arzum Elektrikli Ev Aletleri San ve Tic A.S

5.1C1-01

Address: 土耳其 Turkey Istanbul-Flatofis, Otakcilar Cad. No.78 K:1 Eyup
Tel: +902124678080
Email: gokhan.yildiz@arzum.com
Web:

Arzum is a leading brand of small household appliances market in Turkey since its establishment in 1950s. Its product range consists of 250 different products in 6 product categories. All of Arzum's products are sold with 3 year warranty in all over the world. Arzum's international operations include an extensive distributorship network in 35 countries in 5 continents.

Tiful Holdings Co.Limited

5.1C2-03

Address: 香港地区 香港-香港-香港九龙长沙湾永康街63号29楼13室 Hong Kong Region-Room 13, 29th Floor, 63 Yongkang Street, Cheung Sha Wan, Kowloon, Hong Kong
Tel: 13502277714
Email: 435305@qq.com
Web:

COLORBO INC

5.1C2-06

Address: 美国 United States of America California-Ontario-1150S Milliken Ave,#1063
Tel: +86 21 52911076
Email: sherry@colorbo.com
Web: www.colorbo.com

澳洲维斯特尔集团有限公司 / Australia Vister Group Limited.

5.1C2-08

Address: 香港地区 香港九龙旺角亚皆老街109号皆旺商业大厦27楼5室 Hong Kong Region, FLAT/RM5 27/F RICHMOND COMM BLDG 109 ARGYLE STREET MONGKOK HONGKONG
Tel: +852 82266113
Email: aiforuhk@outlook.com
Web: www.aiforumall.com

公司研发、设计、生产的产品有：
1：智能家居、智能家电、建筑节能、机器人、可穿戴设备、运动科技、智能终端
2：其他有：教育、金融、文化、国际贸易、综合服务、装饰新材料等
The company is from Hong Kong. The products of R&D, design and production are as follows:
1：Smart Home, Smart Home Appliances, Building Energy Conservation, Robot, Wearable Equipment, Sports Technology, Smart Terminal
2：Education, Finance, Culture, International Trade, Integrated Services, etc

Exxon Mobil Corp.

5.1C3-01

Address: 美国 United States of America Texas-Irving-5959 Las Colinas Boulevard
Tel: 86 21 34116290
Email: joy.y.zhou@exxonmobil.com
Web: corporate.exxonmobil.com

埃克森美孚公司是全球知名的油气上市公司，总部位于美国得克萨斯州爱文市。
埃克森美孚拥有行业领先的资源储量，是全球最大的一体化炼油商和润滑油基础油生产商之一，以及石油产品和成品润滑油的主要销售商；埃克森美孚化工公司是全球最大的化工公司之一。埃克森美孚见证了世界油气行业的发展，其历史可追溯到约翰 洛克菲勒1882年创建的标准石油公司，至今已跨越了135年的历程。

MULTIPURE INTERNATIONAL

5.1C3-05

Address: 美国 United States of America NV-Las Vegas-7251 Cathedral Rock Drive
Tel: 020-39959898
Email: guoxy@reehill.com
Web:

アンデス電気株式会社

5.1C3-08

Address: 日本 Japan 青森県八戸市桔梗の工業団地1丁目3-1
Tel: 0366809071
Email: g_li@andes.co.jp
Web: www.andes.co.jp

设计生产贩卖和空气净化器相关产品

台湾苏德宝(集团)有限公司 / TAIWAN SUDEBAO(GROUP)CO.LIMITED

5.1C3-09

Address: 香港地区 HongKong Region, China FLAT/RM A11.9F SILVEROORP INT'L TOWER 707-713 NATHAN RD MONGKOK KLN HONG KONG
Tel: 0085227935512
Email: 251193687@qq.com
Web:

Hans Sasserath GmbH & Co. KG

5.1C3-02

Address: 德国 Germany 科申布罗赫-米伦大街62号
Tel: 021-63760637
Email: donald.tang@dongli-gp.com
Web: www.syr-china.de

SYR品牌创立于1939年，是欧洲高端过滤装置和控制阀品牌，隶属于德国Hans Sasserath GmbH & Co. KG，总部位于德国Korschenbroich。
1980年起，公司进入水处理设备领域，在前置过滤品类上前后研发推出DruFi、JetFi、PurFi、ComFi、KlaFi等技术。至今水处理设备已覆盖前置过滤、末端净水、中央净水、中央软水、防漏保护和暖通水净化产品品类。
1998年德国Hans Sasserath GmbH & Co. KG与东利科技（上海）有限公司达成战略合作协议，进入中国市场。2014年又在上海自贸区成立中德合资的汉斯希尔贸易（上海）有限公司，成为该品牌在全球的第六个分支机构。2017年中文商标“汉斯希尔”成为上海市著名商标。2018年SYR品牌入华20周年庆，同年参加首届中国国际进口博览会。2019年SYR品牌成立80周年庆。

senwater systems, LLC.

5.1C3-06

Address: 美国 United States of America Ohio 44114-Cleveland-Twentieth Floor, 1300 East Ninth Street
Tel: 4001801568
Email: s2@senwater.com
Web: www.senwaterllc.com

Based more than 25 years experience, Senwater team work with the best partners to develope best products: pre-filter, media filter, softener systems, drinking water filter and RO systems. All of our water systems assembled and tested in the USA.

3M公司 / 3M Company

5.1C4-01

Address: 美国 圣保罗明尼苏达55144-1000 United States of America 3M Center, St. Paul, MN 55144-1000
Tel: 22103264
Email: sguo1@mmm.com
Web: www.3m.com.cn

3M公司创建于1902年，全球总部位于美国明苏达州的圣保罗市。100多年以来，3M开发了近七万种产品，从家庭用品到医疗产品，从运输、建筑到商业、教育和电子、通信等各个领域。
3M中国于1984年11月在中国注册成立，是在深圳经济特区外成立的中国第一家外商独资企业。截止目前，建立了9个生产基地、26个办事处、4个技术中心和2个研发中心，员工超过8,200人。

Sykon Gmbh & Co. KG

5.1C3-03

Address: 德国 北莱茵-威斯特法伦州-巴特恩豪森-Industriestrasse 10, 32278, Kirchlengern Germany North Rhine-Westphalia-Bad Oeynhausen-Industriestrasse 10, 32278, Kirchlengern
Tel: +8615021280828 / +86 15021280828
Email: zjc@ccmm11.com
Web: www.sykon.de

Sykon创立于1969年，是德国排名前十的铝合金门窗幕墙系统公司。公司拥有广泛的铝系统产品系列，用于建筑外壳，如幕墙、倾斜/转动窗户、滑梯和升降/滑梯门以及入户门和阳光房。该公司总部设在德国基伦根，设有设计中心，并拥有自己的仓库、工程和车间，为全球客户提供服务。
Sykon is one of the top 10 German players in the area of Aluminum doors, windows and facades. The company was founded in 1969 and has a wide-ranging portfolio of Aluminum systems for the building envelpope like curtain wall, tilt/turn windows, slide and lift/slide doors as well as entrance doors and winter gardens. The company has their headquarters with design center in Kirchlengern, Germany.

MDL environment science & technology Germany GmbH

5.1C3-07

Address: 德国 Germany North Rhine Westphalia-Dusseldorf-40239, Düsseldord,DE
Tel: 13819814489
Email: 646650927@qq.com
Web: www.madelon.com

Madelon German Environmental Technology Co.,Ltd.is located in Germany,North Rhine Westphalia,Dusseldorf,is a professional R&D,production and sales of building ventilation equipment of high-tech enterprises.German business association men\mbers,"Madelon"German well-konwn trademarks.The German Madelon over the years has been to improve the indoor air quality as the mission of enterprise development.

Ingka Services AB

5.1C4-02

Address: 瑞典 Sweden S-215 86 MALMÖ-Älmhultsgatan 2
Tel: 021-2412 4999
Email: jennie.zhang2@ikea.com
Web:

Home legend, LLC

5.1C4-03

Address: 美国 United States of America ADAIRSVILLE-100 EAGLE PARKWAY-GA 30103
Tel: +86(021)68553266
Email: hongxue@powerdekor.com.cn
Web:

De' Longhi Appliances S.r.l.

5.1C5-01

Address: 意大利 Italy Via L. Seitz, 47, 31100 Treviso
Tel: 23562070
Email: yingbin.wang@delonghigroup.com
Web: www.delonghigroup.com

De'Longhi Group is the global leader in Espresso Coffee, Food Preparation and Comfort categories. The Group has 3 main Global brands, Delonghi, Kenwood and Braun, and is passionate about making the heart of every home fun, creative and comfortable.

Tuya Global Inc

5.1C4-04

Address: 美国 United States of America California-Pasadena-177 E Colorado Blvd, 2nd Floor, Pasadena, CA 91105
Tel: 400-881-8611
Email: mzk@xingtupr.com
Web: en.tuya.com

涂鸦信息技术有限公司(以下简称涂鸦或涂鸦智能)成立于2014年，创始成员均为阿里巴巴、海尔、百度的资深管理层，拥有多年的互联网云计算、智能硬件的开发和设计能力。涂鸦智能目前已完成C轮投资，估值超百亿人民币，为AI领域的独角兽企业。Tuya Global inc comprises embedded network modules to make lighting and switches, sensors and plugs, or cameras and appliances seamlessly connect to the IoT, tailored app development, and the world's fastest cloud service spanning every continent.

Nuc Electronics Co.,Ltd

5.1C6-01

Address: 韩国 ROK(Republic of Korea) deagu-bukgu-280 NOwonro
Tel: 021-54338355-701
Email: ning@nuc.co.kr
Web: www.nucdq.com www.nuc.co.kr

韩国(株)NUC电子是专业的厨房小家电企业，自1978年以来，NUC电子已经生产出了原汁机、破壁机、发酵机等60余种健康产品，并为全球60多个国家和地区的消费者，带去了品质生活和健康生活的理念，深受各国消费者的信赖。

Bluewater Sweden AB

5.1C4-06

Address: 瑞典 Sweden Engelbrektsgatan 14 114 32 Stockholm
Tel: +86 021-6126 6210
Email: laurence.dai@bluewatergroup.com
Web: cn.bluewatergroup.com

* The deadline for information submission is 24:00, September 20. All information shall be provided and filled in by the exhibitors and the operating agencies. The Organizers bear no liability for any errors or mistakes in the information.

* 信息截止到北京时间9月20日24:00，所有信息均为参展商及组展机构自行提供及填报。若有错误，承办单位概不负责。

科技生活展区
SCI-TECH LIFE
5.1 馆 Hall

品质生活展区
LIFESTYLES

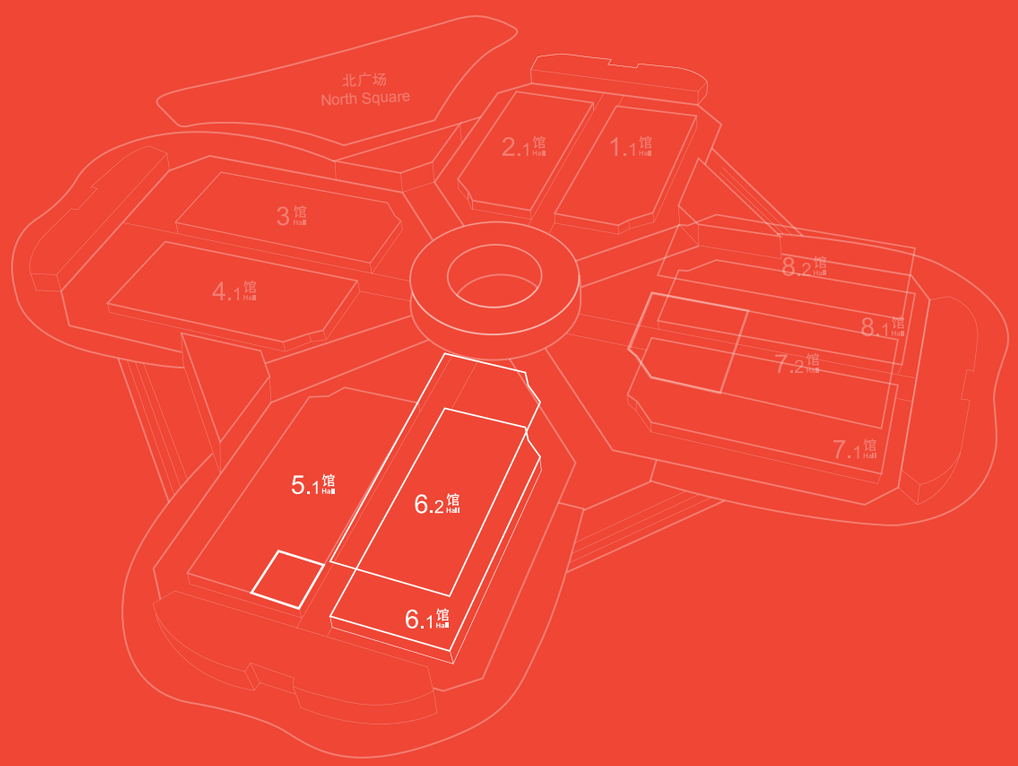

5.1/6.1/6.2馆 Hall ▸▸

SKK Küchen- und Gasgeräte GmbH

5.1C5-02

Address: 德国 Germany Deutschland-Viersen-Nettetalerstrasse 172180-
Tel: +492153 89103
Email: t.lue@germany-home.com
Web:

SKK是德国传统家族企业，总部位于北莱茵州，创立于1921年，传承至今已经近一百年了，是德国手工炒锅顶级品牌。Schnitzler家族一直致力于手工生产、单件制作的高品质高端不粘锅炊具。SKK高品质的源头在于企业对细节的把握和精益求精，一直追求科技和产品的实用性。SKK产品畅销世界60多个国家，包括美国，加拿大，俄罗斯，英国，法国，以色列，中东各国等。
SKK is a traditional family-owned company belonging to the Schnitzler family in Germany. It is nearly 100 years old and is the top brand of German handmade wok. The Schnitzler family has always been committed to the production of high-quality non-stick cookware by hand. The SKK products are sold in Europe, Asia, America, and more than 60 countries around the world.

Stakunft GmbH

5.1C5-03

Address: 德国 Germany Mainz-Kastel-Peter-Sander Str.41C
Tel: 13916060688
Email: 2431637026@qq.com
Web: www.stakunft.de

Stakunft GmbH是一家传统制造与国际贸易并重的现代工贸型德国企业。近年来，公司致力于投资和研发生活消费品领域的新技术、新材料、新设计。产品及项目从孵化期到成熟期各阶段都拥有自主知识产权。同时，也投资于营销渠道建设，包括欧洲最大的电视购物平台MediaShop。我们期待与您携手合作共赢！
Stakunft GmbH is a modern industrial and trade German enterprise which pays equal attention to both traditional manufacturing and international trade. In recent years, we have devoted ourselves to investing and developing new technologies, materials and designs in the field of consumer goods. Products and projects have independent intellectual property rights at all stages.

Teng Long Trading Ltd

5.1C5-04

Address: 爱尔兰 Ireland Roscahill, Tresilian, Brighton Road, Foxrock, Dublin 18
Tel: +353 766026888
Email: 57432820@qq.com
Web:

腾龙贸易于2002年都柏林以建材，家装产品起步，后将业务延展至礼品，塑料制品，促销品等领域，在慈善塑料制品领域拥有70%的爱尔兰市场份额，以及40%的英国市场份额。
Teng Long Trading Ltd started in Dublin in 2002 with building materials and home decoration products, then extended its business to gifts, plastics products, promotional products and other fields.

PT. MASPION

5.1C5-05

Address: 印度尼西亚 Indonesia East Jawa-Surabaya-No.38-40 Kembang Jepun Street
Tel: +62313530333
Email: yonoliang@maspion.co.id
Web: www.maspion.com

Maspion Group is one of the largest groups of companies in Indonesia, an integrated diversified group, which offers products and services ranging from consumer durable goods including Electrical Household Appliances, Metal Kitchen-wares, Plastic House-wares, PVC Pipe, Metal Rolling, Construction Materials, Contracting Project, Industrial Estates, Energy Business, Port and also Commercial Banking.

Pure Beauty Brands BV

5.1C5-06(01)

Address: 荷兰 Netherlands Amsterdam-Laarderhoogtweg 25
Tel: +31(0)638359059
Email: melissa@beautybrandsagency.com
Web: beauty-brands-agency.jimdosite.com

- Exclusive distributor & Agent 2.0 of prestige beauty brands
- With an unique 360° brand activation strategy
- Building Love Brands at the retailers
- Private label producer of beauty brands
- Business consultancy for (beauty) brands
- Always brand hunting new beauty brands

Beaudelor Cosmetics

5.1C5-06(02)

Address: 荷兰 Netherlands Noord Holland-Amsterdam-Lassusstraat, 1hs
Tel: +31651493779
Email: info@beaudelor.nl
Web: www.beaudelor.nl

Beaudelor Cosmetics was founded in 2009. The company focuses in the Women Beauty Industry.
The company creates cosmetic products makes women look radiant instantly. Our products soften skin that instantly gives skin a radiance, also refreshes and hydrates, even over make-up and could be used anytime and anywhere.
Beaudelor Cosmetics is engaged in the environment. Everything is recyclable!

DMQ BV

5.1C5-06(03)

Address: 荷兰 Netherlands Noord Holland-Amsterdam -Abberdaan 10
Tel: +31 624933444
Email: a.lee@dutchmilq.nl
Web: www.dutchmilq.nl

DMQ is a Dutch Trading and Distribution company. DMQ represents a number of high quality Dutch brands in China as an exclusive distributor. We choose our brands carefully, they should have real added value to the consumers in the sense of health, nutrition and lifestyle. DMQ is almost 8 years active on the Chinese CBEC and offline market and has extensive Sales and Brandbuilding experience.

Blue Sarefa

5.1C5-06(09)

Address: 荷兰 Netherlands Zuid Holland-Den Haag-Alexanderstraat 10
Tel: 0031(0)617334340
Email: glennmahangoe@hotmail.com glenn@bluesarefa.com
Web: www.bluesarefa.com

Blue sarefa is an import and export company that is active in sevaral markets. We are a young company we are growing continuously. We have good contacts within Europe, Asia and worldwide we can offer some very competitive prices for our customers. We trade in a lot of well know brands in food,household goods, hygienic articles, cosmetics & perfumes, confectionaries and beverages.

JL Beauty Advice and Management

5.1C5-06(10)

Address: 荷兰 Netherlands The Hague-Het Kleine Loo 414M
Tel: 0031-631771268
Email: sweetheartbeauty16@gmail.com
Web:

Our company portfolio includes biological beauty products, medical beauty treatments and healthcare services. We work with top surgeons and medical experts in Europe as well as the most luxurious salon brand in the world. We have an aesthetics clinic in the Hague and receive clients from all over the world. We help people maintain their health and beauty inside out.

PromZAsia

5.1C5-06(11)

Address: 荷兰 Netherlands Wormer-Veerdijk 40-I, 1531 MS
Tel: 85227706998
Email: jeffgo@promzasia.com.hk
Web: www.promzasia.com.hk

邦展亚洲有限公司是一个为亚洲分销商和最终客户提供服务的集合平台，致力寻找欧洲顶级商务礼品和促销产品。超过20年的经验，在香港和上海设有办事处。
In Europe, you will find many specialized producers and providers of well-designed and usually self-produced business gifts and top-quality promotional products. However, it is very difficult to find these providers, especially from outside Europe. PromZasia has accumulated knowledge and experience in over twenty years in Europe. We take care of the sourcing and products that you need.

贝印株式会社 / KAI CORPORATION

5.1C6-04

Address: 日本 日本东京都千代田区岩本町3-9-5 Japan 3-9-5 IWAMOTO-CHO,CHIYODA-KU.TOKYO,JAPAN
Tel: (03) 38626411 / (03)38626411
Email: liujun@kai-china.com
Web: www.kai-group.com

贝印作为世界著名的日本品牌，已经创立了一百多年。贝印的四大主要产品系列：家居用品；美容产品；剃须刀；医疗工具(尖端技术)。贝印有10000多种产品。凭借卓越的品质，贝印的销售网络已覆盖多个国家，并在全球占有一定的市场份额。
Kai—as a world famous Japanese brand, has founded for more than one hundred years. Kai' s four main product series: Household goods; Beauty products; Razors; Medical tools (cutting-edge technology). Kai has more than 10,000 kinds of products. With excellent quality, Kai' s sales network has reached to many countries and occupied a certain market share in the world.

SimpleHH

5.1C6-07

Address: 美国 United States of America Los Angeles-SAN MARINO-1427 SAN MARINO AVE STE C
Tel: 18918208571
Email: allen.hui@sh-yuhao.com
nova.ji@sh-yuhao.com
Web: www.simplehh.com

帕尔金属株式会社 / PEARL METAL CO., LTD

5.1C6-02

Address: 日本 新潟县-三条市-五明190番地 Japan NIGATA-PREF-SANJO-CITY-190 GOMYO
Tel: 0711-3610588
Email: 2791233932@qq.com
Web: www.pearl-life.com

パール金属株式会社成立于日本昭和42年（1967年），位于日本新潟县三条市，会社旗下有厨房及生活品为主导的“珍珠生活”“工夫具”品牌，户外用品品牌“领头鹿”；会社建筑面积237600㎡，产品种类多达60000余种，年销售额490亿日元以上，拥有多个全自动化仓库。1996年，パール金属株式会社的产品进入中国，由鄂州三条珍珠金属有限公司拓展中国市场，在中国进行销售及品牌推广。
Pearl Metal Co., Ltd.was established in 1967 in Sanjo-city, Niigata, Japan. With the brands of "PEARL LIFE", "COO FOO GOO" and "CAPTAIN STAG", it has been making kitchenware and outdoor leisure activity goods. The company has a building area of 237,600㎡ including the several automated warehouses storing more than 60,000 products with the annual sales of over 49 billion yen.

Maitland-Othello GmbH

5.1C6-05

Address: 德国 Germany Germany-60311 Frankfurt am Main-Töngesgasse 44
Tel: 0766-2925118 / +49 06929729582
Email: vivian@mastergroup.com.cn
Web: www.othello1888.com.de

Othello, established in 1888 in Solingen, Germany, the world-renowned "City of Blades", was one of the few kitchen brands with more than 100 years history and pure Germany heritage in the industry. Through a strategy of experiential marketing including Experience stores and Community Stores, Othello will build a nationwide distribution and sales system that will form the basis for global expansion.

Carpet Lover club& Bordbar Art

5.1C6-09

Address: 伊朗 Iran Isfahan-Isfahan-ni 11+2, Posht matbakh alley, Ostandari street, Esfahan - Iran
Tel: 0098 31 32226060
Email: INFO@CARPETLOVERCLUB.COM
Web:

Corelle Brands (Hong Kong) Co., Limited

5.1C6-03

Address: 香港地区 HongKong China HK-HK-21/F Edinburgh Tower The Landmark, 15 Queen's Road Central, HK
Tel: 8621-51635358
Email: lillyzhang@corellebrands.com
Web: www.corellebrands.com.cn

美国康宁餐具原隶属于世界500强的康宁公司，以制造特殊玻璃闻名于世。公司总部位于美国伊利诺伊州的芝加哥市，作为全球厨具类领导品牌，目前在全球拥有3000多名员工，产品销往40多个国家及地区。
Corelle Brands, one of the global leading houseware brands, is renowned for its high quality glass material. Our global headquarter is in Rosemont, Illinois with 3000 employees. Our worldwide sales distribution covers over 40 countries and regions with products range from cookware, dinnerware, storage to electronic appliances, etc.

Fuling Plastic USA Inc.

5.1C6-06

Address: 美国 PA-allentown-6690 grant way United States of America PA-allentown-6690 grant way
Tel: 0576-86623058
Email: sales8@fulingplastics.com.cn
Web: www.fulingusa.com
www.fulingplastics.com

富岭塑胶美国公司成立于2014，并于2015年在纳斯达克上市，股票代码是“FORK”，公司位于美国宾州阿伦敦市，专业生产环保塑料餐具，是美国五大连锁快餐商麦当劳，肯德基，赛百味，汉堡王，温蒂丝的主要供应商。同时从事新材料——轻量化PET的生产，研发和销售，该材料广泛适用于航空航天，建材，汽车内饰，食品包装，印刷基材，广告用品等各类市场。
Founded in 2014 and listed in Nasdaq in 2015, Fuling Plastic USA inc is located in Allentwon, Pennsylvania, USA. It specializes in the production of environmentally friendly plastic tableware. It is the main supplier of McDonald's, Kentucky, Subway, Burger King and Wintis. At the same time engaged in the production, research and marketing of new materials - lightweight PET.

Padidar Tarhe Khallagh

5.1C6-10

Address: 伊朗 Iran Tehran-Tehran-keshavars ave, Daemi st, Ziba alley, num 39, Tehran, Iran
Tel: 0098 21 88930148
Email: info@arahandmade.com
Web:

Mirhosseini Carpet

5.1C6-11

Address: 伊朗 Iran Tehran-Tehran-Khayam Ave., Mohammadieh Sq., Firoozeh Trade center
Tel: 0098 21 55153380
Email: shid_sepidan@yahoo.com
Web:

MORTAZAVI CARPET PRODUCTION

5.1C6-12

Address: 伊朗 Iran Isfahan-Isfahan-negin hakim building - hakim st. isfahan. IRAN
Tel: 0098 32 220336
Email: info@mortazavicarpet.com
Web:

台灣藝品中心 / Taiwan Art Jung Shin Company

5.1C7-01(01)

Address: 台湾地区 Taiwan China 銅鑼鄉-苗栗縣-苗栗縣銅鑼鄉樟樹村竹圍10鄰60號
Tel: 886-921-873555
Email: arts51689@gmail.com
Web: n/a

木雕，石雕，銅雕，家飾用品
Taiwan Art Jung Shin Company
Wood sculpture，Stone carving，Bronze，Furniture supplies

禾禮有限公司 / CHIN HO LI CO., LTD.

5.1C7-01(02)

Address: 台湾地区 台灣-新北市-新北市新庄区琼林南路103巷8弄26号 Taiwan TAIWAN-New Taipei City-No. 26, Aly. 8, Ln. 103, Qionglin S. Rd., Xinzh0uang Dist., New Taipei City 242, Taiwan
Tel: 886-2-2206-2999
Email: agherli@ag5588.com
Web: www.ag5588.com

各大博物馆、名家作品授权黄金画、黄金金箔复制产品
CHIN HO LI CO., LTD.
The meticulous workmanship of gold products

Dian-Ya Design Studio

5.1C7-01(03)

Address: 台湾地区 Taiwan China TAIWAN-Taipei City-1F., No.191, Nanjing W. Rd., Datong Dist., Taipei City 10345, Taiwan
Tel: 886-2-2559-7709
Email: lcc5511@hotmail.com
Web:

Dian-Ya Design Studio
Innovative Chinese Cultural Accessories

JSC Svetlogorsk Pulp&Board MIll

5.1C7-02(01)

Address: 白俄罗斯 Belarus Gomel-Svetlogorsk-1 Zavodskaya Street
Tel: +375 2342 48 463
Email: y.berdovich@sckk.by
Web: www.sckk.by

The mill produces:
1. Sulphate bleached softwood pulp
2. Corrugated cardboard
3. Filter board

東方空間文化藝術事業有限公司 / East Space Corp Ltd.

5.1C7-03(01)

Address: 台湾地区-台中市-南區國光路218號6樓之1 Taiwan Taiwan -Taichung City-6F.-1, No. 218, Guoguang Rd., South Dist.
Tel: +886422859189
Email: esc6788@gmail.com
Web: www.espace.tw

1988年起，即以優越的陶瓷設計製造能力。同年成立彩繪研創室矢志研發釉藥，發展出上千種釉藥色料，奠定彩繪與釉下彩窯燒呈色的基礎功夫。台華窯運用藝術彩瓷的活潑創意，豐富陶瓷工藝的底蘊；融合藝術默化日用陶瓷生活美學的品味。這是以台灣在地，藝術創意，生活實踐的價值策略中，靈活展現台華窯【台灣堅持・絕代風華】的信念。
Since 1983, Tai-Hwa Pottery has worked assiduously to refine and perfect household and display ceramics, adhering to a business philosophy that embraces the company' s local roots and includes a strong background in handicraft manufacturing techniques, enhanced product quality and innovative design.

嘉峰陶藝有限公司 / jafon art-ceramics co.,ltd

5.1C7-03(02)

Address: 台湾地区 新北市鶯歌區育英街65之1號 Taiwan No.65-1, Yuying St., Yingge Dist., New Taipei City 23942, Taiwan
Tel: +886 912852373
Email: sopen428@gmail.com
Web:

jafon art-ceramics co.,ltd
Winning boutique series of works. Taiwan famous tea pot. Ru kiln firewood tea Taiwan innovative iron pot old iron pot to the series

碁奇藝術事業社 / KEYCHIEF BRONZE FINE ARTS

5.1C7-03(03)

Address: 台湾地区 高雄市-高雄市-高雄市鳳山區文龍東路48號 Taiwan Kaohsiung City - Kaohsiung City -No.48, Wunlong E. Rd., Fongshan Dist., Kaohsiung City 830, Taiwan
Tel: 077311922 / 07-7311922
Email: k.chief@kimo.com
Web: www.keychiefarts.com

碁奇藝術事業社成立於1996年專營藝術青銅雕塑。本公司秉持生活藝術化的經營理念，堅持在品質的嚴格要求，積極開拓各類型設計概念創新，工藝精湛，風格獨具的藝術青銅雕塑。
Keychief Bronze Fine Arts Enterprise was founded in 1996 and specializes in artistic bronze sculptures. The company committed to the business philosophy of life art also pursued the strict requirements of quality, and actively explores various types of design concept innovation, exquisite craftsmanship and unique style of artistic bronze sculpture.

MARVIN & SAMIL CO., LTD.

5.1C7-03(04)

Address: 台湾地区 Taiwan China TAIWAN-Taipei City -10F., No. 120, Sec. 2, Anhe Rd., Da'an Dist., Taipei City 106, Taiwan
Tel: 886-5-5977338
Email: 13412041158@163.com
Web:

MARVIN & SAMIL CO., LTD.
Bags with Taiwan's Cultural and Creative Elements, Multifunctional Fashion Handbags, Computer Bags, IPAD Bags, Releated Accessories

Newbaze Ireland Nutrition Food

5.1C7-04(01)

Address: 爱尔兰 Ireland Monaghan-Carrickmacross-Carrickmacross Industrial Estate
Tel: 021 57072514
Email: daipengjuan@newbaze.com
Web: www.newbaze.com

Newbaze Ireland Nutrition Food established in 2017 in Carrckmacorss, Co. Monaghan Ireland. The company is specialized in Infant baby formula manufacturer and sales. The high quality products is going to sale in China, Middle East, Africa and South East Asia countries.

Irish Breeze UC

5.1C7-04(02)

Address: 爱尔兰 Ireland Co. Louth-Drogheda-Irish Breeze UC., Donore Rd.,
Tel: +61421070426
Email: szhang@irishbreeze.com
Web: www.waterwipes.com

WaterWipes 唯帕丝婴儿水巾，摒弃婴儿湿巾所有不必需的成分，化繁为简，提供蕴含99.9%*的水和1滴水果精华的纯萃婴儿湿巾。
WaterWipes, the world' s purest baby wipes, are made with 99.9% ultra-purified water, 0.1% citrus fruit extract, and none of the ingredients found in all other baby wipes which can sometimes cause skin sensitisation. They are similar to 'cotton wool & water' as recommended world-wide – but far more convenient and effective.

Kaymed

5.1C7-04(03)

Address: 爱尔兰 Ireland Dublin-Naas Road-Bluebell Ind Estate
Tel: +35314192999
Email: cstapleton@kaymed.ie
Web: kayfoam.com

A European leader with a global presence in sleep technology. Our science helps your business to convert sales of consumer mattress and pillow products. Our in-store measurement devices capture consumer body data to identify the best products for their needs.

SEPAM

5.1C7-04(04)

Address: 爱尔兰 Ireland TIPPERARY-CLONMEL-44 IRISHTOWN
Tel: 18913765881
Email: hdong@sepam.com
Web: www.sepam.com

SEPAM is a family owned company that has been managing and delivering project solutions to the engineering and contracting industry globally for over forty years.

Sindhiya Enterprise

5.1C7-05(01)

Address: 孟加拉国 Bangladesh Dhaka-5 Moulovi Bazar (Gulbadan Super Market)
Tel: 00880257311269 / 00880257311296
Email: sindhiyabd@gmail.com
Web: www.sindhiya.com

Sindhiya Enterprise (Sindhiya BD Limited) deals in all kind of Natural Herbs, Herbal Products, Medicinal plants, Organic Products, Natural/ Food/Health ingredients & Food products.
Our Main products are Kaempferia Galanga (Sand Ginger) Sindhiya washnuts (Soapnuts-Sapindus Mokrossi), Thanaka Products, Safflower (Kusumba/Kusum) oil, Organic Products for Skincare, Hair care & Health care.

Tumar Art Group

5.1C7-05(02)

Address: 吉尔吉斯斯坦 Kyrgyzstan Chui-Bishkek-Isanov 5
Tel: +996312887170
Email: tumar@tumar.com
Web: www.tumar.com

TUMAR Art Group is a women-run business uniting a group of artisans and craftsmen in Kyrgyzstan. The artists redefine traditional materials and techniques, applying modern designs for the contemporary world!

Daoloy Handicraft and Gifts / Daoloy Handicraft and Gifts company

5.1C7-05(03)

Address: 老挝 Laos Vientiane Capital-Hatsayfong-Km8, Thaduea Road, Somvang Village
Tel: 856-20 29804379
Email: vilack.lncci@hotmail.com
vilack.lncci@gmail.com
Web:

Daolouy Handicraft combines wooden carved and handicraft product from all across Laos, The main product of the company include: Lao silk and cotton including bag, scarf, small wooden carve and much more. Moreover, we are supporting local people by creating jobs for them with materials and techniques to improve their product quality.

Handknots Nepal Pvt Ltd

5.1C7-05(04)

Address: 尼泊尔 NP-kathmandu-Nayabazar Nepal State 3-kathmandu-Nayabazar
Tel: +9779841886243
Email: info@handknots.com
Web: handknots.com

HandKnots Nepal produces genuinely high-quality Pashmina scarves and handmade custom carpets for the international market in a reasonably good price. We believe in maintaining quality consistency of the products that we produce despite they are handmade.

Facil Clothing Limited

5.1C7-05(05)

Address: 冈比亚 Gambia KMC-Kanifing-Kanifing, KSMD
Tel: +46736790077
Email: elizabeth@facilclothing.com
Web: www.facilclothing.com

Facil Clothing is a social impact business startup in Gambia manufacturing underwear, undershirts and t-shirts for the West African market.

Daraja

5.1C7-05(06)

Address: 冈比亚 Gambia The Gambia-Banjul-Oasis Building Senegambia Hwy
Tel: +(220)701-4444
Email: darajaboutique@gmail.com
Web:

"Daraja is an affordable chic handbag brand that specializes in the retail and production of bespoke handmade leather Bags and accessories. Providing quality and unique styles to our customers with African pieces that you can easily blend into your day to day Wardrobe. With a good collection of high quality artisanal handmade leather products at competitively low prices."" Our Vision Statement Aff

KARAW INTERNATIONAL

5.1C7-05(07)

Address: 塞内加尔 Senegal Dakar-Dakar-Cite Kayraba apt B21 Immeuble Jaune, Grand Yoff
Tel: +221772764728
Email: karawgalsen@hotmail.com
Web:

We are specialized in the formulation, manufacture and sale of natural cosmetic products of old-fashioned organic ingredients. Our conditionals and also sell the raw materials used in our manufacture.We have a physical shop in Dakar and distribute our products are marketed in 5 beauty institutes for women, two salons for men, free shop at Blaise Diagne international airport in Senegal and via e-co

Tricot Industries Pvt. Ltd.

5.1C7-05(08)

Address: 尼泊尔 Nepal Kathmandu-Kathmandu-Mathuri sadan 1st floor, Ravibhawan
Tel: 977 01 4671200/201
Email: easkg@westargalaxy.com
Web:

"Tricot is the luxurious Cashmere manufacturing company in Nepal making high-quality KNITTED and WOVEN products such as Pullovers, Ponchos, Scarves, Throws, Blankets, Hats and Gloves offering Duty-Free access to EU, USA, Canada, Japan, Australia and New Zealand. We have adapted to change and kept up to date with technology to produce complicated designs using modern machines in a socially compl

Suprim Crafts

5.1C7-05(09)

Address: 尼泊尔 Nepal Patan,Lalitpur-Ikhachhen-11
Tel: 15520971
Email: hemrscraft@gmail.com
Web:

"Suprim Crafts is a metal craft industry and family owned business for many generations.It is a sole manufacturer, retailer and dealer for metal statues.Metals worked are; brass bronze, copper bronze.Religious statues include; Buddha, Tara, Ganesh, Saraswoti, etc.We also design and produce statues according to customers' orders."

NPI Collection

5.1C7-05(10)

Address: 尼泊尔 Nepal Kathmandu-Thamel, Opposite Sanchayakosh Building
Tel: 009771- 014423560
Email: npicollection@gmail.com
Web:

NPI Collection is a Manufacturing wholesaling and Retailing company. Our Exquisite collection of Cashmere products are handwoven by master artisans who collaborate with our designers to bring contemporary designs. We believe in empowering women with equal opportunities.

Kiran Shoes Manufacturers

5.1C7-05(11)

Address: 尼泊尔 Nepal Kathmandu -Shanka Park, Ringroad
Tel: 00977 01-4378950
Email: corporate@ugnepal.com
Web:

In 1990, we launched a mid-priced, value for money brand called GOLDSTAR to service more price conscious markets. GOLDSTAR is a robust brand made with genuine materials and modern technology. We have also been fortunate to have received national recognition as a progressive and extremely well managed business through best exporter award and best tax payer in export category.

Indecom Soie Pvt. Ltd.

5.1C7-05(12)

Address: 尼泊尔 Abuja/Nigeria-Bhaktapur-Baniya Bhawan, Red Cross Chowk, Balkot, SVNP-2 Nepal Bhaktapur-Baniya Bhawan, Red Cross Chowk, Balkot, SVNP-2
Tel: +9771 6637569, 66359
Email: indecom@indecomsoie.com
Web:

We manufature a wide range, design and color of 100% Pure Chyangra (Cashmere) shawls and scarves.

GAYATRI PASHMINA INC.

5.1C7-05(13)

Address: 尼泊尔 3-KATHMANDU-GOKARNESHWOR-6 , JORPATI Nepal KATHMANDU-JORPATI, GOKARNESHWOR-6
Tel: +977-9813642897
Email: gayatripashmina@gmail.com
Web: www.gayatripashmina.com

Manufacturer and exporter of high end woven cashmere products using traditional Nepalese craftsmanship.

Tree Jade Company Limited

5.1C7-05(14)

Address: 缅甸 Myanmar Mandalay-No.29/Ah-57 Btw 18th&19Road .Btw 81st &82nd Street
Tel: 092022778
Email: shwefrankie@gmail.com
Web:

TreeJade Co.,Ltd and home decorations was established in 2012.At the company facility is a collection of petrified woods.We have many skilled workers and make high quality petrified wood products ,ornaments such as beads string slabs necklaces,small sculpture We export mainly China and Asian market.

Idea Gems Art & Frame

5.1C7-05(15)

Address: 缅甸 Myanmar Yangon-No 21, West Side, Bogyoke Market
Tel: +9595005115
Email: ideagemsart@gmail.com
Web:

Idea objective is to fulfill the international & Myanmar customers needs and wants for long term relationship. Gems art is mainly product for retail customers & usually going china trade fair.

TMC furniture

5.1C7-05(16)

Address: 老挝 Laos Nahae village
Tel: 85621 214628
Email: pkhamdy@yahoo.con
Web:

TMC furniture is one of readers in the wood furniture in Laos, providing a variety OG quality wood products and excellent customer service throughout Lao PDR, China, Thailand and Other countries. Our factory main products are wood tables, Chair wardropes, bed and other wood furniture with beautiful and awesome patterns and disgns.

Siorn

5.1C7-05(17)

Address: 老挝 Laos Vientiane -Xaysetha district-Ban Amone,Hom15
Tel: (+85620) 54399789
Email: Silapa.moonmae@gmail.com
Web:

At Siron handicraft, our Weaver keep producing quality textiles for contemporary Lao dressing, especially the traditional Laotian skirts (sinh). We are the manufacturer to produce a unique high quality, we are specialized in made to order textiles with a great variety of different size and colors.

MTP Interior Decoration

5.1C7-05(18)

Address: 老挝 Laos Vientiane Capital-212 Nongbone Rd, Ban Naxay, Saysettha District
Tel: +8562055513779
Email: Somsathleng@gmail.com
Web:

Retailer Importer and Exporter Service Provider

kiengkham jewelry

5.1C7-05(19)

Address: 老挝 Laos sayyabory-xienghone-laos
Tel: (0085620)59336336
Email: 1366619013@qq.com
Web:

Our company is mainly engaged in the wholesale and sale of jewelry, handicrafts, silver jewelle to Thailand, China, Southeast Asian countries, our handicrafts are not just jewellery and fabrics, Lao traditional skirts, we ask Laos local professional staff to weave, do The cloth that came out still brought us the history and culture of Laos, and then wholesaled to Thailand, China, etc.

Dilbar Fashion House /Ashimbay LTD

5.1C7-05(20)

Address: 吉尔吉斯斯坦 Kyrgyzstan Bishkek-114/2 Kievskaya St.
Tel: +996772509289
Email: dilbarfashion@mail.ru
Web: dilbar-style.com

Manufacturing of luxury clothing

CMC "Daairy"

5.1C7-05(21)

Address: 吉尔吉斯斯坦 Kyrgyzstan Bishkek-114 Chui
Tel: +996312661131
Email: jipara@mail.ru
Web: www.daairy.kg

Handicraft

Art studio “Bukon”

5.1C7-05(23)

Address: 吉尔吉斯斯坦 Kyrgyzstan Bishkek-86, 9-Yanvarya St
Tel: +99670920 016
Email: artbukon@gmail.com
Web: www.aidai-design.com

Art Studio “Bukon was founded in 2001 It produces original, contemporary clothing, fashion accessories and home decor, inspired by the cultural heritage of Kyrgyzstan.

Art group «Saima»

5.1C7-05(24)

Address: 吉尔吉斯斯坦 Kyrgyzstan Chui-Kara-Balta-39 Pionerskaya St
Tel: +996555163815
Email: art7saima@gmail.com
Web:

Handicraft

Chapan Sar Studio

5.1C7-05(22)

Address: 吉尔吉斯斯坦 Kyrgyzstan Bishkek-Isanova str. 42/1
Tel: +996 772 388-455
Email: juma_gul@mail.ru
Web:

Creative studio Chapan Sar was founded in 2011. Its main objective is the modern interpretation of the chapan - exclusive traditional outerwear of the people of Central Asia. They are made in the ethnic style with the use of natural fabrics. We own 3 certificates of the "Quality Mark" from the UNESCO.

ESTIVO SAS

5.1C7-05(27)

Address: 哥伦比亚 Colombia Antioquia-medellin-CRA 48 No.48 sur 75
Tel: 4486188 104
Email: international.sales@myestivo.com
Web: www.myestivo.com

Estivo is a Colombian company specialized in the production and distribution of swimwear and beach accessories

Viper Leather (Viper Enterprise)

5.1C7-05(28)

Address: 孟加拉国 Bangladesh Dhaka-Dhaka-Ka 29 Shahjadpur, Gulahsn
Tel: 01780400600
Email: viperleather@yahoo.com
Web: www.viperleather.com

Viper Leather is the concern of Viper Enterprise. Viper manufacturer, Retail leather goods, Footwear. We Have 3 Own Outlets, 11 Dealer points. Since 2011.

SPADIX LIMITED.

5.1C7-05(29)

Address: 孟加拉国 Bangladesh BANGLADESH-DHAKA-HOUSE#26(B1) ,ROAD#18,BLOCK-A,BANANI,DHAKA-1213.
Tel: 0088 01711576619
Email: spadixltd@gmail.com
Web:

Spadix Limited.is a well-known Govt. Registered Bangladeshi Company, This is established in 2001. Our Company is mainly producing Textile & Jute diversified Handicrafts and home decorative and gift items.we are producing by the artisan women and also exporting of all Kinds of Jute Diversified Products, and Jute bags, Jute Yarn, Jute Rope, Jute Handmade Items, Handicrafts, Baskets, Christmas & Fash

Kohinoor Leather Products Ltd.

5.1C7-05(30)

Address: 孟加拉国 Bangladesh Dhaka-Dhaka-70 Shohid Sayed Nazrul Islam Soroni (North South Rd.)1st F/L, Dhaka
Tel: 88029513230
Email: sikdersazzad@yahoo.com
Web:

Kohinoor Leather Products Ltd.is an 100% export oriented manufacturer & exporter

Bangladesh Expo

5.1C7-05(31)

Address: 孟加拉国 Bangladesh Dhaka-28, Level-3, Fair Plaza, Mirpur-1
Tel: 00880257311296
Email: bdorganik@gmail.com
Web: www.bdexpo.webs.com

Bangladesh Expo established in 2016 is a registered firm to promote Organic, Natural and Eco friendly products.
We export all Organic, Natural & Eco-friendly products, Jute Bags, Jute Products, Natural Candles, Herbs, Medicinal Plants & Herbal Products.

TIGGER CUSTOM COMPANY

5.1C7-05(33)

Address: 塞内加尔 Senegal DAKAR-MARISTES 2 NT 45
Tel: +338322551
Email: tiggercustomcompany@gmail.com
Web:

TIGGER CUSTOM COMPANY is a Senegalese company selling various goods but also hires the sale and maintenance of vehicles. We are also a chain of haute couture with traditional and classic outfits for men women and children. We are also Producer and distributor of shea butter named Afrikarité.We already participate to the 1st CIIE.

WELLNESS

5.1C7-05(32)

Address: 塞内加尔 Senegal DAKAR-5 RUE COLBERT B.P. 6912 DAKAR ETOILE
Tel: (+221) 77 646 02 02
Email: wellnessboutik@gmail.com
Web:

Wellness core business is the production and marketing of its range of natural, organic and ecological products for the well-being of its clients. Wellness creates local value-added cosmetics for skin care and hair care.

Viengthong Trading Co.,Ltd

5.1C7-05(34)

Address: 老挝 Laos Vientiane Capital City-Sisattanak District-299 Thai-Lao Road, OPP#103 Hospital, sisattanak District,Vientiane Laos PDR
Tel: +85621313534
Email: vthong@laotel.com
Web: www.viengthongherb.com

Viengthong Trading Co.,Ltd is a company from Laos specialize in Herbal Medicine such as tea, herbs, honey, healthy beverage, Lao herbal Malacca, black ginger liquor, java tea, moringa tea, massage oil, etc.

Solmazer Mutfak Esyalari San. Ve Tic. Ltd. Sti.

5.1C7-06(01)

Address: 土耳其 Turkey Bagcilar -Istanbul -Istoc 7. Ada, No.18-24 34306
Tel: +90 212 659 00 19
Email: ozgur@solmazer.com
Web: www.herevin.com

More than 60 years of know-how, we are focused in Kitchenware industry as exporting more than 100 countries worldwide. We produce Kitchenware and Tableware products that are made of Glass and Plastics in our own factory nearby Istanbul.

SEBA KIMYA SAN VE TIC A.S

5.1C7-06(02)

Address: 土耳其 Turkey STANBUL-TUZLA K MYA SAN. ORG. SAN. BÖLG. NO:06
Tel: +902165932333
Email: burak.aktas@sebakimya.com.tr
Web: www.sebakimya.com

KOPAS KOZMET K

5.1C7-06(05)

Address: 土耳其 Turkey ISTANBUL-Sarıyer-Maslak Mah Sumer sok No 4 Maslak Office Building Kat 13
Tel: 90 212 365 1906
Email: cengiz.aksu@kopas.com mehmet.sokmen@kopas.com
Web: www.kopas.com.tr

Kopa is one of the oldest and leading cosmetics companies in Turkey, established in 1974.
The company manufactures and sells a wide range of products from different category including baby care, wax and depilatory, perfumes, deodorants and hair colorants.
Kopas has several strong brands which have leading market shares supported by a strong sales platform and distribution network.

Rabek Tekstil San. Tic. Ltd. Sti.

5.1C7-06(03)

Address: 土耳其 Turkey Bursa-KOSAB, Bosna Cad. 9, Kestel
Tel: +902243319922
Email: contact@rabektekstil.com
Web: www.rabektekstil.com

Producer of high fashion printed fabrics for ladieswear. Viscose and / or Cotton Elasthane Jersey & blends. We produce woven as well as knitted fabrics. Our certificates: GOTS, OCS, EcoVero, Tencel, Walt Disney FAMA, Öko-tex 100 Class1

GROUP EMPORIO EV ESYALARI TICARET A.S.

5.1C7-06(06)

Address: 土耳其 Turkey Istanbul-Beylikduzu OSB. Karanfil C. No:19/Z Beylikduzu
Tel: 00902128753434
Email: aso@porio.com.tr
Web:

FREMAP ELEKTRONIK TEKSTIL VE INSAAT URUNLERI ITHALAT IHRACAT SAN.TIC. LTD STI.

5.1C7-06(07)

Address: 土耳其 Turkey N/A-ISTANBUL-SARIYER CAD. POLIGON MAH. ABC PLAZA 117/B KAT:-1 ISTINYE SARIYER ISTANBUL TURKEY 34460
Tel: +902122992524
Email: AKAYIKCI@FREMAP.COM.TR
Web: www.nesossoap.com

We at Nesos produce solid soaps made from extra virgin olive oil. Our goal is to produce best soap that can be produced. We use cold production process so all the antioxidants, vitamins and glycerin stays inside the soap. Our products are handmade, natural and vegan. There are NO harsh chemicals, perfumes, palm oil, paraben, SLS, color additives in our products. We strictly do not use any of these

CVEHERUN MUCEVHERAT / CEVHERUN MUCEVHERAT

5.1C7-06(09)

Address: 土耳其 Turkey ISTANBUL-FATIH-EMINSINAN MAH YENICERILER CAD N0:11-3-4
Tel: 00902125119134
Email: info@cevherun.com
Web: www.cevherun.com

Life is to be lived one day at a time and CEVHERUN 24k gold jewelery imbues this spirit into each unique token. We handcraft each item in 24k gold, silver and gemstones in the time tested techniques of the ancient goldsmithing traditions dating back thousands of years. History is our muse.

Iran-China Chamber of Commerce & Industries (ICCCI) / ZAVEH PARS HERBAL CO.,LTD

5.1C7-07

Address: 伊朗 TEHRAN-TEHRAN-No5, Iranshahr Alley, Mousavi St., Taleghani Ave.,Tehran, Iran Iran Tehran-Tehran-Vali Asr Street-In front of Mellat Park- Western Nahid Street-Pllate 56- Floor5- Union 25
Tel: 0098 21 88306999 / 0098 21 22654415
Email: info@iccci.ir shafaeilk@gmail.com
Web: www.iccci.ir

Sayahnia Persian Carpet

5.1C7-08

Address: 伊朗 Iran Tehran-Tehran-No.54, Khayatha Bazar, Pachenar , Khayam Ave, Tehran
Tel: 0098 21 55579619
Email: m.sayahnia@yahoo.com
Web:

Gaeini Persian Carpet

5.1C7-09

Address: 伊朗 Iran tehran-tehran-farin building, No.44, golestan 10th alley, Pasdaran st
Tel: 0098 21 22778007
Email: gaeini.carpet@gmail.com
Web:

samanehaye Dama Noor Energy SEDNA

5.1C7-10

Address: 伊朗 Iran Tehran-Tehran-No 61, 17th ALLEY, KARGAR shomali, Tehran, Iran
Tel: 0098 21 88004006
Email: info@sednaco.ir
Web:

Hosseini Trading / Padidar

5.1C7-11

Address: 伊朗 Iran Tehran-keshavars ave, Daemi st, Ziba alley, num 39, Tehran, Iran
Tel: 0098 21 88930148
Email: info@arahandmade.com
Web:

Nasser Nishaburi / Abbas Nishaburi

5.1C7-12

Address: 伊朗 Iran Tehran-Tehran-Khayam St.,No.601, Carpet Bazzar Building, floor6
Tel: 0098 21 55620142
Email: nishaburi.com@gmail.com
Web:

SIFCO GROUP (Separouk Iranian Farda Company)

5.1C7-13

Address: 伊朗 Iran Iran-Tehran-Unit6, Taghdiri Ave. , Sadeqie Sq.
Tel: 0098 21 44017205
Email: ravand@sifcompany.com
Web:

亞芙生物科技有限公司 / Ya Fu Biotechnology Limited Company

5.1C8-01

Address: 台湾地区 Taiwan China 臺北市松山區-臺北市松山區長安東路2段215號7樓之2
Tel: 02-27401207（台北）
Email: c6301077@gmail.com
Web:

本公司工廠成立近20年專業於生活清潔用品類,主要原材料採用純天然無患子萃取精液;引進德國之類核融合高分子離子處理技術不需任何化學成分產生可溶性之結晶固體;產品成分有皂素、胺基酸和多酚醣體;並經四大公證機構檢驗認證含有天然發泡劑12.4%、不含西藥和農藥,也不含重金屬和化學成分;本產品有台灣神皂、牙寶、廚寶及衣寶;產品適用洗頭、洗臉、洗身體、刷牙,女性局部清潔和寵物特效清潔。

AVA IRAN HALAL FOOD COMPANY

5.1C8-02

Address: 伊朗 Iran Qom-Qom-NO60/ AMARYASER.St/QOM/IRAN
Tel: 0098 25 37736901
Email: 2473613774@qq.com
Web:

ARTAPARSIS Co. (APCO.)

5.1C8-03

Address: 伊朗 Iran Tehran -Tehran -4th floor, No.42, Rama Bld.West Nahid St., Africa Ave., Tehran -Iran
Tel: 0098 21 22013958
Email: a_manafzadeh@yahoo.com
Web:

Khorasan gohar saffron

5.1C8-04

Address: 伊朗 Iran Tehran-Tehran-unit 105,No. shahin, West Hemmat,Tehran,Iran
Tel: 0098 21 44102931
Email: Hbo_company@ymail.com
Web:

Iran Golab Co.

5.1C8-05

Address: 伊朗 Iran tehran-tehran-irangolab building, north valiasar st., above vanaq co.
Tel: 0098 21 88674086
Email: info@irangolab.co
Web:

Craft de Creation

5.1C8-07

Address: 尼泊尔 Nepal Bagmati-Kathmandu-Thamel, Kathmandu, Nepal
Tel: +977-1-4265569
Email: adilfb4@gmail.com
Web:

The company Craft de Creation is the exporter and wholesaler of Cashmere and silk carpet. Company is exporting the such goods to China, Iran, Dubai etc.

Everest Thanka Treasurers

5.1C8-08

Address: 尼泊尔 Nepa Bagmati-Kathmandu-Thamel, Kathmandu
Tel: +977-1-4249680
Email: bgshrestha@gmail.com
Web: www.tibetthanka.com

The company is dealing Art and painting more than 15 years. Basically the company is manufacturers and exporter of such products in China and neighboring countries.

Botswana Exporters And Manufactures Association

5.1C8-09

Address: 博茨瓦纳 Botswana Gaborone-P O Box ad 605 ADD, Gaborone
Tel: +267 3910628
Email: sankolobam@bema.co.bw
Web: www.bema.co.bw

Botswana Exporters and Manufacturers Association (BEMA) formerly known as Exporters Association of Botswana (EAOB) has been registered to incorporate persons or entities actively involved manufacturing, processing, value addition activities, or providing service related to manufacturing or processing.

JUST SNAP ITPTE LTD

5.1C8-10

Address: 新加坡 Singapore 81 UBI AVENUE 4 #09-10 UB ONE SINGAPORE
Tel: 13928459588
Email: 3511687868@qq.com
Web:

HEALTHTODAY Co.,Ltd

6.1A0-01

Address: 韩国 ROK(Republic of Korea) Gyeonggi-do-Yongin-si-145-17, Wangdam-ro, Mohyeon-eup, Cheoin-gu
Tel: 82-70-4817-3578
Email: tearose@healthtoday.co.kr
Web: healthtoday.co.kr

cocodor作为韩国香薰的代表，是采用安全的成分和最佳的配合比例而生产的。蜡烛是来自意大利，以质量引以为豪且香味挥发持久。
Healthtoday, founded in 2002, has gained widespread recognition for our outstanding specialty in diffusers and candles. Since we launched "cocod' or diffuser" with the top quality and the reasonable price, cocod' or has beloved by people over the world.

HR Handels GmbH

6.1A0-02

Address: HR Handels GmbH Maschstrasse 7 30169 Hannover 德国
Tel: 15968788856
Email: 45322002@qq.com
Web:

HR Handels GmbH，创立于德国下萨克森州首府汉诺威，其在德产业还包括熊猫旅游和浪漫巴士联合有限公司，出任中国驻汉堡总领馆领事保护员、德国汉诺威中国中心主席，是汉诺威欧亚培艺教育学校创建成员之一，并且获取德国商会（IHK）培训资格证。我司依托于世界著名的德国汉诺威医学（MHH）建立，拥有独立的生产线以及研发实验室。同时我们已与德国多个著名实验室开展了密切合作，涵盖护肤/家居清洁等类目。

inflow HK CO.,LTD / Inflow HK CO., LTD

6.1A0-03

Address: 香港地区 香港皇后大道中181號新紀元廣場低座1501-C1室 Hong Kong RM1501-C1 Grand Millennium Plaze (Lower Block), 181 Queen's Road Central, Hong Kong Region
Tel: 61158310
Email: zhoulan@inflowcn.com
Web:

公司成立于2010年，此次进博会带来了法国有机洗护品牌-轩萝，轩萝有机洗护系列产品，源自法国天然有机农场，关注绿色健康生活方式，得到ECOCERT法国有机认证。轩萝洗护产品原料从有机农场萃取的植物提取物:花蕊水、植物精华、植物油、植物汁液等，让头发获得健康滋养，无负担。按人发质不同开发了干性、油性、中性、控油防脱等洗发水、发膜精油系列专业洗护发产品。带来全新体验和感受。
NATURALISTE BIO was created in 2010 in France and specializes in organic hair care products. Organic ingredients are sourced from organic farms in France and formulas are certified by ECOCERT, according to the COSMOS organic certification standards. NATURALISTE BIO promotes a green and healthy concept and uses the purest plant extracts for its shampoos, conditioners, hair care oils and masks. It o

INTELCARE

6.1A0-04

Address: 摩洛哥 卡萨布兰卡- Mers Sultan-23, rue Abdeslam Al Khattabi Morocco 20340 Casablanca- Mers Sultan-23, rue Abdeslam Al Khattabi
Tel: 0769-3380 3545 / +212 522 20 71 45
Email: Selina@intelcare.ma
r.afaf@intelcare.ma
Web: www.intelcare.ma

Intelcare是一家集研发、生产、销售为一体的综合性美容化妆品企业，专注于用天然活性剂制成有机的化妆品，工厂坐落于北非摩洛哥卡萨布兰卡。产品主要以摩洛哥纯天然有机坚果油为基础油，种类涵盖面膜系列，抗皱紧肤系列，保湿系列，修复系列，原液系列，洗发护发系列等。公司致力于化妆品领域的长期发展，为客户提供优质服务。
我司的理念在于用我们的热情和承诺去研发健康和纯天然的化妆品。
Intelcare is devoted to organic cosmetics exclusively made by natural active ingredients. The cornerstone of our approach lies in our passion and our commitment to only ever develop cosmetic products that are healthy and natural.
Our products do not contain chemical preservatives, parabens, silicone, sulphites, dyes or artificial scents.

Happiness Club Co. Ltd.

6.1A1-03

Address: 日本 Japan Fukuoka Ken-Fukuoka City-Happiness Club Central Building 2F, 1-14-6, AKASAKA, CHUO-KU, FUKUOKA, JAPAN
Tel: 86-21-51336338
Email: siyanbin@mediaprice-sh.com
Web: www.ganqilou.com

Happiness Club in Japan is a company that operates its own brand of hair-care products, cosmetics, health food and daily necessities. our company also has stores and retail outlets in major as "Rakuten EC- Platform", "Yahoo Shopping" and "Amazon". Our annual sales volume is 250 million US dollars, the main commodity is "KANKIROU Hair tonic" hair loss prevention products.

GREAT & GRAND Co., Ltd.

6.1A1-06

Address: 日本 大阪市-中央区-道修町2丁目1番10号 Japan Osaka City-Chuoku-2-1-10 Doshomachi
Tel: 18105182832
Email: 834093278@qq.com
Web: www.ggco.co.jp

G&G simplify the process of manufacturing and distributing products. We established relations with over 160 manufacturers of consumer goods, including pharmaceuticals, cosmetics, health food, daily necessities, food and beverages. We built logistics centers in Kanto, Chubu, Kansai and Kyushu. We joint-develop with retail companies (e.g. Japanese drugstores) on private brands and products.

株式会社花印妆业研究所 / Hanajirushi Institute of cosmetics,Inc.

6.1A1-01

Address: 日本 104-0061 东京都中央银座 2-12-12 Japan 2-12-12 Ginza,Chuo-ku,Tokyo104-0061,Japan
Tel: 0081-3-6264-2154
Email: ouokutei@hanajirushi.co.jp
Web:

以时尚、功效、平价为标准，花印在法国、日本及欧美化妆品领先国度定制国际流行的化妆品；以中国和亚洲市场为背景，花印将汇集着全球流行文化、尖端研发和制造技术的优秀化妆品以平易的价格传递给世界各国的女性和男性。
Based on FASHION, EFFICIENCY, ECONOMY, HANAJIRUSHI customizes international popular cosmetics from world's leading cosmetics countries such as France, Japan, and other Euro-American countries. Presenting excellent cosmetics integrated fashion culture, cutting-edge R&D and manufacturing technologies to worldwide customers, especially in Chinese and Asian market.

La Borg Trade (PTY) Ltd

6.1A1-04

Address: 南非 South Africa Western Cape-Cape Town-45 assete strt
Tel: 0834564432
Email: jasonshao7644@yahoo.com
Web:

Our comapny soecialized in jewellwery making and semi prcious stones.

Dr. Wild & Co. AG

6.1A1-07

Address: 瑞士 Basel-Hofackerstrasse- 8 Postfach 932 Switzerland Basel-Hofackerstrasse-8 Postfach 932
Tel: 0574-88197981
Email: saleszj@van-max.com
Web:

源于1932年，由实验化学家Samuel Wild博士和药剂化学家Werner Wild博士在巴塞尔成立了一家制药公司：Dr. Wild & Co. AG（简称怀尔德）。三代传承距今已有88年历史。
怀尔德制药公司是瑞士的前30强领先的制药公司之一。
瑞士专业口腔护理品牌，为欧洲牙科医院、药店、药妆店专供品牌。
Originated in 1932, Dr. Samuel Wild, an experimental chemist, and Dr. Werner Wild, a pharmaceutical chemist, founded a pharmaceutical company in Basel: Dr. Wild & Co. AG. Has 88 years of history. Dr. Wild & Co. AG is one of the top 30 leading pharmaceutical companies in Switzerland. Swiss professional dental care brand, a brand exclusively for European dental hospitals, cosmetics stores.

森田生医股份有限公司 / DR JOU BIOTECH CO., LTD.

6.1A1-02

Address: 台湾地区 海埔里鹿工南二路21号-鹿港镇-台湾彰化 Taiwan NO.21, LUGONG S. 2ND RD-LUKANG TOWNSHIP-CHANGHUA COUNTY
Tel: 53830505
Email: mandylv@drjou.cc
Web: www.drmorita.cc

森田早期是以一间在台湾地区彰化老街的百货行起家，代理进口护肤品为主，后转型开发自有护肤品品牌。從1934年的『森田行』直到今日的『森田』，2000年森田在日本东京成立分公司，携手专业的中日研发团队，致力于面膜的创新研发和进口原料配方。未来，森田将继续用心做好产品，打造專業品質、專業研發、銷售全球的亚洲面膜品牌，专注每一款产品，只为每一位消费者更美丽更自信。
Through long-term collaborations with Japanese companies since 1934, Dr. Morita has accumulated abundant experiences in skin care products. DR. JOU INNOVATION INSTITUTE has been focusing on researching fundamental ingredients and innovating advanced formulas. We have obtained more than 10 patents for our facial mask products and also received multiple global awards.

東是株式会社 / OCO SPACE Co.,Ltd.

6.1A1-05

Address: 日本 広島県-廿日市市-佐方4丁目1-1-403 Japan HIROSHIMA-SAGATA 4 Chome, HATSUKAICHI-Shi-1-1-403
Tel: 09080665877
Email: yin@oco-space.com
Web: oco-space.com

中国和日本在地球的东方，当社取“东”字，“是”取实事求是的“是”。“东是”就是在地球东方的我们，以心传心，做实事求是之事。
公司以“诚”、“仁”、“义”、“孝”为行事准则，通过做有助于“健康”、“美丽”和“幸福”的事业，实现我们自身的幸福感。
健康为第一，朋友是财富，美丽方永恒。
When our society takes the word "東", it means China and Japan are in the East of he Earth, while" 是 "takes from "实事求是" meaning seeking truth from facts. "東是" shows that we are in the east of the world and we seek truth from facts by heart.
We doing businesses that contribute to "health", "beauty" and "happiness".

WELCOS CO.,LTD

6.1A1-08

Address: 韩国 ROK(Republic of Korea) Gangwon-do-Chuncheon-si-21-12,Toegyegongdan 1-gil
Tel: 0631-3660669
Email: whhl1688@163.com
Web:

Welcos has been advocating happiness through beauty for more than 30years since it was founded in October 1986.Welcos continue to be with our customers in the years to come

GERMCORE INTERNATIONAL FRANCE

6.1A1-09

Address: 法国 巴黎-64 rue de Monceau75008 Paris France paris-64 rue de Monceau75008 Paris
Tel: 8613818163218
Email: lgyfly0206@gemcoreparis.com
elianejiang@gemcoreparis.com
Web: www.gemcoreparis.com

GEMCORÉ 珈蔻，源自法国的轻奢专业眼部修护品牌，倡导“轻奢格调、艺术情怀、尖端科技”理念，开启眼部护理新纪元，为消费者带来尖叫的产品、愉悦的体验和情感的共鸣，独树一帜的体验式营销，让消费者获得信任并享受新的消费观。在轰动全国的珈蔻爱眼季活动和正在进行的珈蔻眼霜普及风暴，打破业绩下滑局面，锻造珈蔻核心竞争力！法国珈蔻，用世界的眼光，呵护你的美。
GEMCORÉ is coming from France, a light luxury professional eye repair brand which promotes theory “Light luxury style, artistic feelings, Cutting-edge technology”; prepares to open new edge for eye repair. Exclusive experience marketing brings enjoyment and emotional resonance for consumers, Let consumers trust and enjoy the new concept of consumption.

EDARSKO COMPANY LTD

6.1A1-13

Address: 加纳 Ghana GREATER ACCRA-ACCRA-P.O BOX 0911 OSU REGAL
Tel: 002332450867859
Email: darkobernard88@yahoo.com
Web: www.afcci.org

EDARSKO公司成立于2010年，是加纳最传统木雕工艺品公司，公司自2018年以来一直专业致力于非洲各国黑木雕刻产业，始终发扬（诚信，创新，精致）为立业之本的团队精神。并形成一套完整的考察，体验，合作，导诊，跟踪一站试服务体系。
EDARSKO company established in 2010, is Ghana's most traditional wood carving handicraft company. Since 2018, the company has been dedicated to the black wood carving industry in African countries and has always carried forward the team spirit of (honesty, innovation and refinement) as the foundation of business. And form a complete set of inspection, experience, cooperatio.

M.E.G. Gottlieb, Diaderma-Haus GmbH + Co

6.1A1-16

Address: 德国 Germany Baden-Württemberg-Heidelberg-Am Taubenfeld 25
Tel: 008663446225
Email: 470023370@qq.com
Web: www.ihtct.de

ARYALAYA is a natural and organic brand, founded by MEGGottlieb Diaderma-Haus Company in 1905 in Heidelberg, Germany. Over the past 114 years, it has continued to focus on skin research. IHTCT Company represents the ARYALAYA brand , is responsible for the promotion, marketing and sales in China. We hope that more consumers can feel the magical products.

SRI BNB (Pvt) Ltd

6.1A1-10

Address: 斯里兰卡 Sri Lanka 科伦坡-科伦坡
Tel: 0094 71648000
Email: bandara.diss@yahoo.com
Web:

KOMODA PAPER INDUSTRIAL CO., LTD

6.1A1-14

Address: 日本 Japan EHIME-PREF - SHIKOKUCHUO-CITY -4789 SANGAWA
Tel: 18621353570 / +86-021-5789-7519
Email: yangyang.grant@gmail.com
Web: komoda-paper.com

荐田纸工业株式会社创业于1931年，位于日本四国中央市。公司占地20000m²，自主研发全自动生产机器设备并建有四个全自动无人物流中心。经过80多年的社会发展及创新，公司成为现在集生产和物流为一体的高程度自动化的综合性企业。公司与日本超市药妆店建立了生产及物流服务的战略合作伙伴关系。2019年积极开拓市场，整合自身资源，本着“创新、严谨、坚持”的精神，为中日市场提供物廉价美的快消产品。
Komoda paper industrial co., LTD was founded in 1931 and locate in Shikokuchuo-shi Japan. The plant covers an area of 20000 squaremeters which includes four automatic unmanned logistics centers.In 2019, the company actively develops the market,, integrates our own resources, aims to provides excellent quality and reasonable price fast-moving consumer products for the Chinese and Japanese markets.

希尔企业有限公司 / C.L. Enterprise GmbH

6.1A1-17

Address: 德国 萨克森-安哈尔特-巴伦施泰特-Am Ostbahnhof 1 Germany Saxony-Anhalt-Ballenstedt-Am Ostbahnhof 1
Tel: +4939483 531026
Email: junwu@clenterprise.de
Web: sunshinecosmetic.de

C.L企业有限公司是一家专注研发，生产和销售保健品和化妆品的德国企业。成立于2003年。
为欧洲中型保健品生产和销售企业协会会员，德国化妆品企业协会会员。拥有自有品牌Sunshine Health 和Sunshine Cosmetic。
公司的开发团队和欧洲的著名大学，顶级研究院和实验室密切合作，研究和生产出一些列成份优良，效果显著的健康产品及护肤产品。
Our company is producing dietary supplements since 2003 and cosmetic products since 2016. We're cooperating with 50 duty free shops and 20 pharmacies in Europe. We're hoping to have the chance to find cooperation partners with the help of this exhibition and to introduce our product into the Chinese market.

DEA LABORATORIES PTY.LTD

6.1A1-12

Address: 澳大利亚 Australia Victoria-BRAESIDE-15/80 Mills RD
Tel: 0430070220
Email: blair@dealab.com.au
Web: www.ficcecode.com

DEA Laboratories Pty Ltd是一家澳大利亚跨国日化用品公司，总部位于澳大利亚墨尔本，成立于2016年。公司的产品已销往全球十多个国家和地区.DEA Laboratories其开发的洗护产品是澳洲第1个提出新自然主义洗发护理品牌。产品专注于头皮护理及修复，恢复头发的年轻光泽。
DEA Laboratories Pty Ltd is an Australian multi-national consumer goods corporation headquartered in Melbourne, Australia, founded in 2016. The company's products have been sold to more than ten countries and regions around the world.DEA Laboratories has developed FicceCode, a new Australian Revolution in hair and scalp care. Its products specialise in protecting and assist in reversing the age of

FREZYDERM S.A.

6.1A1-15

Address: 希腊 Greece 75 Menandrou str. 10437 Athens
Tel: 021-61221152
Email: angle_eling@163.com
Web:

Frezyderm是一家研发、制造、销售和分销产品的希腊领先公司。公司在1986年 由Anastasios Anastasiou先生成立，一直以严格的制药标准来研发和制造安全有效，高品质的产品
Frezyderm is a leading Greek company that develops, manufactures, sells and distributes products. Founded in 1986 by Mr. Anastasios Anastasiou, the company has been developing and manufacturing safe, effective and high-quality products with strict pharmaceutical standards.

COSMEREVE

6.1A1-18

Address: 法国 PARIS-23 RUE DE LA BEAUNE France MONTREUIL-22 RUE DE LA BEAUNE
Tel: 13801836621
Email: kiralijiayi@bellissbeauty.com
info@bellissbeauty.com
Web: www.belliss-paris.com

Cosmereve was founded in Paris by Mr. Loo Victor. Thanks to the advanced research technology, Cosmereve was helped by Station f, the largest startup campus in Europe, to grow its brand.Mr. Victor is full of passion for innovation and are constantly updating their technologies.

大幸薬品株式会社 / Taiko Pharmaceutical Co.,Ltd

6.1A2-01

Address: 日本 Japan Osaka,550-0005-Nishi-ku-1-4-1, Nishihonmachi
Tel: 86-513-86929983
Email: sissi@zongyimx.com
Web: www.seirogan.co.jp

本公司于1946年由柴田音治郎一手创立，希望成为一家永续经营的企业，提供客户「健康」这个莫大的幸福，命名为「大幸药品」。
两大事业分别是以胃肠药『正露丸』为主力商品的医药品事业，以及于创立60年（2006年）正式拓展的『加护灵』为主力商品的感染管理事业。
本公司为了透过商品和服务，成为顾客『缺之不可』的企业，今后也会，始终如一，以认真严谨的态度面对研究至製造商品的所有流程，追求顾客的顶级幸福。
The company was founded in 1946. The two major businesses are the pharmaceutical business which is based on the gastrointestinal drugs "Selgogan", and the infection management business which the main product is "Cleverin".

TANA-CHEMIE GMBH

6.1A2-02

Address: 德国 Germany Rheinland-Pfalz-MAINZ-Rheinallee 96
Tel: 021-65077793
Email: felix.zhao@gernano.com
Web: www.wmprof.com

Established in 1971 and is the pioneer in integrally sustainable high performing, cleaning and sanitizing products for professional sectors like Facility Care, Foodservice , Health Care, Lodging and Food Processing. tana PROFESSIONAL and green care PROFESSIONAL are the two European leading brands of the Professional Division.As a part of the family-owned Werner & Mertz Group.

KMPC Co., Ltd

6.1A2-03

Address: 韩国 ROK(Republic of Korea) Korea-Pocheon si, Gyeonggi-94 1 Yongjeonggyeongje ro 1 gil, Yongjeong ri, Gunnae myeon,
Tel: 827086717001
Email: drjbeckham7888@kmpc.co.kr
Web:

KMPC is an eco friendly comprehensive detergent company, which produces detergents which is safe for environment and human body. We produce 50 kinds of eco friendly detergents, such as house cleaner, baby dete rgent, and for pet in general distribution, TV homes hopping channels and online in domestic and ab road. We have our factory in Pocheon Yongjeong General Industrial complex.

Herbacin cosmetic GmbH

6.1A2-04

Address: 德国 Germany Thüringen-Wutha-Farnroda-D-99848
Tel: 0755-33201351-811
Email: elaine.li@beautyus.com.cn
Web: www.herbacin.com

德国有着悠久的历史，传统文化和知识遗产随着时代的趋势传承至今。德国一个家族企业－小甘菊，开创了真实的成功故事。故事起源于大约1900年代，一位药剂师在田园般的德国图林根州有了一个绝妙的全新灵感：来自大自然的全新护理配方。自1905年直到今天，德国小甘菊已成为一个全球化的脸部、身体及头发的天然保养护理品牌，由欧洲热销至中东、亚洲、美国及加拿大。
One Of The Oldest Natural Cosmetics Brands In Germany.It all started around 1900 when a pharmacist in idyllic Thuringia had a brilliant idea: a new care formula inspired from the heart of nature. Since 1905, this has now become a complete natural face, body & hair care program with a growing fan base stretching around the globe, touching all continents from Europe to the world.

Wellnessence Pharma Pty Ltd

6.1A2-05

Address: 澳大利亚 Australia NSW-sydney-22/364 Park Rd, Regents Park
Tel: +61285740404
Email: suellen@biancosue.com.au
Web:

Wellnessence Pharma是一家总部悉尼的专注于美容及营养产品的公司。我们的直接品牌"Bianco Sue®和兄弟品牌"Aucoko®带给市场澳洲得天独厚的天然原料与最前沿的科技相结合的产品。我们产品线主要有两条，一条是护肤品，一条是营养品。
Wellnessence Pharma based in Sydney which specialises in cosmeceutical and nutrition products. Our direct brand "Bianco Sue©" and brother brand "Aucoko® "brings to market products that combine the power of Nature's most unique gifts with the latest advances in Science and Technology. We has two products lines. One is skincare products, another one is health food.

柏琳天然护肤品有限公司 / Börlind Gesellschaft für kosmetische Erzeugnisse mbH

6.1A2-06

Address: 德国 Germany calw-Lindenstraße 15. 75365
Tel: +86-20-88529130
Email: vinny@kang-li.com.cn
Web: www.boerlind.com/ab/zh-cn/ www.boerlind.com/zh-cn

ANNEMARIE BORLIND德国柏琳，全球有机护肤先驱。创立于1959年，总部位于德国黑森林，畅销全球44个国家，将“绝不把不能吃的产品涂抹在皮肤上”的品牌主张深入贯彻到产品研发生产中，产品先后荣获了托瑞斯大奖、号称美容行业奥斯卡的“自然遗产奖”、欧洲企业奖冠军等无数奖项，并得到欧美时尚明星们的热烈追捧。
Borlind GmbH established in 1959 in Black forest Germany, with the concept: if I can't eat it, I won't put it on my skin. ANNEMARIE BÖRLIND – NATURAL BEAUTY stands for natural cosmetics with proven efficacy, which we develop from singular raw materials through innovative and sustainable action. Annemarie Borlind has won many awards. ANNEMARIE BÖRLIND, pioneer of natural cosmetics.

FARMEC S.A.

6.1A3-01

Address: 罗马尼亚 Romania Napoca-Cluj-Napoca-16,Henri Barbusse Street
Tel: 18611528383
Email: hudayan@sinodrink.net
Web: www.farmec.ro

在化妆品领域拥有超过125年的经验，是罗马尼亚现代化妆品工业的领导者。通过向女性提供由经验丰富的美容专家创造的创新、高效、值得信赖的产品，帮助她们保持自然美丽。GEROVITAL娇柔微达代表的是罗马尼亚的传统和创新，创新是品牌的DNA，继安娜 阿斯兰研发了抗衰老品牌之后一直贯穿始终。
More than 125 years of experience in the cosmetic field and the creator of the the modern industry of cosmetic products in Romania.Total turnover 2018 : 50,8million Euro;765 employees; Leader on the Romanian cosmetics market; The first producer of Gerovital H3 Prof. Dr. Ana Aslan creams and emulsions; Executive owner of Gerovital H3 Prof. Dr. Ana Aslan cosmetic trademark.

花美水有限公司 / hanamisui co., ltd.

6.1A3-02

Address: 日本 东京都-新宿区-西新宿六丁目15番1-703号 Japan Tokyo-Shinjuku-Central park tower latour shijuku 703, 6-15-1, Nishi-shinjuku
Tel: 0571-88056727
Email: qiuli@ztonepharma.com
Web: hanamisui.jp

Hanamisui花美水从2003年开始一直致力于生产“女性自我护理产品”。经过长期研究开发，在妇产科专家的协助下研发了女性清洁剂、综合护理剂、润滑剂等一系列与女性私密部位有关的多种个人护理用品和化妆品。产品独有的专利器型使消费者使起来用极为方便，全系列产品已在日本各大药房及美妆店热销。在日本韩国等地收到了千万消费者的热捧。
Hanamisui was founded to solve women's personal worries on their intimate area and provide them with feminine care products to help be free from such concerns.
Since 2003, Hanamisui has been actively and continuously doing professional researches and development activities in association with independent research institutes and test labs.

Ouji Sekken Corporation.

6.1A3-03

Address: 日本 Japan Osaka-Osaka-Shi-Abeno Harukas 31F, 1-1-43 Abenosuji, Abeno-ku
Tel: 0081-072-275-9699
Email: contact@whealthfields.cn
Web: www.whealthfields.co.jp

位于日本大阪的日化用品生产商，主要产品以洗衣凝珠等次世代的洗衣用品为主，同时包括家庭用消毒液、厨房清洁剂、母婴用品等，是一家多元化的国际化企业。
A daily chemical company located in Osaka,Japn. Laundry product is the major product of the company.The star product is laundry pod, also we produces disinfectant, kitchen cleanser, baby care product etc. We are a international company with several branches in the world.

B&D Life Health Co., Ltd.

6.1A3-04

Address: 韩国 ROK(Republic of Korea) Chungcheongbuk-do-Eumseong-gun-13,Yeongsan-ro 421beon-gil,Gamgok-myeon,
Tel: 82-2-552-8481
Email: bnd8481@hanmail.net
Web: www.e-seje.com

B&D Life Health Co.,Ltd.seeking harmony between human and nature is continuously researching and putting in efforts to provide healthy life to consumers.In the domestic detergent market that function was the most important factor when consumers choose detergent.

CLEAN & CLEAN, LDA

6.1A3-05

Address: 葡萄牙 Portugal Lisboa-Lisboa-Alameda Dos Oceanos N° 101 5D 1990-389
Tel: 400-8233-005
Email: 2901144945@qq.com
Web: eurocleanclean.com

Clean&Clean Lda总部位于欧洲大陆最西端的葡萄牙里斯本，Clean&Clean Lda是一家专注于高品质细分化家庭清洁用品的产品研发和推广的公司，公司拥有独立的实验室，独特的产品配方和研发团队。并聘请利比亚半岛最苛刻的质量检测公司之一对公司的所有产品进行严格的质量检测。
Clean&Clean Lda is headquartered in Lisbon, Portugal, the westernmost part of the European continent. Clean & Clean Lda is a company focusing on the development and promotion of high-quality, subdivided household cleaning products. Clean&Clean Lda has independent laboratories, unique product formulation and r&d team.

澳大利亚健康产业有限公司 / Australian Health Industry Pty Ltd

6.1A3-06

Address: 澳大利亚 Australia NSW-Rhodes-Suite 601 Level 6, 5 Rider Boulevard
Tel: +61401339898
Email: alex.zheng@a-hi.com.au
Web: www.eaoron.com.au

澳容，英文名EAORON，澳大利亚美容潮流领导者。唯一获得两任澳大利亚总理亲自签名支持的澳大利亚一线美容护肤品牌，亦是各大连锁药店热销品牌。
EAORON于2014年5月研发了澳大利亚首款涂抹式水光针，并引发全球涂抹式水光针的消费热潮。上市后全面进驻澳大利亚药房系统。旗下产品在澳洲大药房、澳洲WOOLWORTH和COSTC热销。
EAORON is a leading Australian skincare brand, famous for Hyaluronic Acid Collagen Essence and the world's thinnest Hyaluronic Acid Collagen Face Mask, which immediately became “hero” products in the market and have been complimented by 3 Australian prime ministers.

Nature's beauty (NZ) limited

6.1A3-07（01）

Address: 新西兰 New Zealand Auckland-Mount Roskill-40Roma Road
Tel: 021-67895137
Email: wupeina@vancy.com
Web:

Bee Kiwi 碧卡维的母公司 Nature's Beauty由品牌创始人John Peeters先生于1996年创建，是新西兰当地历史悠久的护肤品公司之一。John 先生主导研发的Beekiwi蜂蜜系列，把新西兰特有的麦卢卡天然蜂蜜与22年美肤研发经验结合，将蜂蜜的温和修护，抑菌滋养融入消费者的日常肤护理当中，获得了世界各地消费者的认可和喜爱。
BeeKiwi's parent company Nature's Beauty was founded in 1996 by the founder John Peeters, and is one of New Zealand's famous care companies. The Beekiwi skin care, led by Mr. John, combines New Zealand's Manuka honey with his 22 years of skin care experience to blend honey's repairing ability and antibacterial nourishment into daily skin care. And it has been loved by consumers around the world.

Human Resource Communications Ltd.

6.1A3-07（02）

Address: 日本 Japan 京都市-下京区-界町绫小路下永原町 153 番地
Tel: 021-67895137
Email: wupeina@vancy.com
Web:

Esthe Dew伊诗（特）露创始人春日郁代女士经营专业美容沙龙20余年，运用自己丰富的美容知识和经验，在2001年创立了ヒューマンリソースコミュニケーションズ株式会社，专注于美容护肤产品。针对用户不同的肤质，使用习惯等，春日郁代女士主导研发Esthe Dew系列产品。伊诗露面世之初就连续占据COSME榜单前列，获得了世界各地消费者的认可和喜爱。
Kasuga ikuyo, founder of Esthe Dew has more than 20 years of experience in running professional beauty salons. Using her beauty knowledge and experience, she founded her company in 2001, focusing on skin care products. She developed the Esthe Dew products for different skin types and habits. It has occupied the forefront of the COSME list and has been loved by consumers around the world.

瑞士菲赛 / FCC SA

6.1A3-08

Address: 瑞士 Switzerland Switzerland-Aigle-Chemin de Champex 8,CH-1860
Tel: +86010-64466697
Email: sunny1327@126.com
Web: les-alpages.com.cn

瑞士菲赛股份公司位于瑞士莱蒙湖畔Aigle小镇上，1991年建厂至今，是一家集化妆品及药品的生产厂家，有自己的科学实验室，原料生产车间，药品及化妆品生产车间。创始人是瑞士健康和社会保障部特许的生产基地。旗下的LES ALPAGES 艾贝诗品牌产品功效介于药品及化妆品之间，拥有30个系列，几百种家居产品及适合专业美容院,皮肤管理中心，医疗美容等机构的疗程用产品。
The company is located in Aigle town on Lake Lemon, Switzerland. Since its establishment in 1991, it has its own scientific laboratory, pharmaceutical and cosmetic production workshop. Its LES ALPAGES brand products have a range of efficacy between drugs and cosmetics. They are suitable for the treatment of professional beauty parlors, medical beauty institutions and other products.

Bio Kor Matiks Ltd.

6.1A3-09

Address: 以色列 帕特提卡-特拉维夫-以色列 Israel 91 Herzl Street, Ramla-Tel Aviv-Yafo -ISRAEL
Tel: 010-58220173
Email: sales@annhyatt.cn
Web: www.annhyatt.cn

Bio Kor Metics LTD，以色列知名国际专业化妆品公司，成立于1982年，在专业化妆品领域地位超然尊崇，公司旗下Christina品牌，以变革性的产品和独特的卓越效果畅销全球60多个多家和地区。
Bio Kor Metics Ltd., a well-known international professional cosmetics company based in Israel, was established in 1982. It has an outstanding position in the field of professional cosmetics. The Christina brand sells well in more than 60 countries and regions around the world with innovative products and unique excellent effects.

ROYAL LA PERLE PTY LTD

6.1A3-10

Address: 澳大利亚 Australia NSW-SYDNEY-DARLING PARK TOWER 2. LEVEL 20/201, SUSSEX ST
Tel: 13621809826
Email: ERIC_XIANG@OUTLOOK.COM
Web: www.royallaperle.com.au

Royal la Perle is a high quality, innovative, dynamic Australian cosmetic company.We are committed to providing skin care and cosmeceutical products of the highest quality.Our products are formulated to gently repair, and effectively restore a youthful appearance for the skin of women worldwide.

GELLE FRERES FRANCE

6.1A3-11

Address: 19 Avenue de l'Opera,75001 Paris Paris 法国
Tel: 021-62163098
Email: huangshimeng@gellefreres.com.cn
Web:

GELLÉ FRÈRES is a French royal skincare brand founded in 1826. Being French royal perfumer and supplier, GELLÉ family is a legendary family with nearly 200 years of history. GELLÉ FRÈRES has won 20 awards from the World Expo and served nobles like Louis XVI and Queen Marie Antoinette. GELLÉ FRÈRES advocates the brand concept of "natural purity", "efficient care" and "fragrant joy".

日本INFINITY株式会社 / INFINITY CO.,LTD

6.1A3-12

Address: 日本 東京都-豊島区-東池袋3-9-1-1F Japan tokyo-toshima-ku-3-9-1-101, higashiikebukuro
Tel: +86-0411-83891660
Email: wang@realeb.com
Web: www.infinityjpgroup.com

日本INFINITY株式会社是日本本土公司，主要经营日本知名品牌电子产品的日本本土销售以及香港东南亚等地的出口业务。品类包括美容仪、剃须刀、个人消费性用品、化妆品等。
公司以满足客户的期待为宗旨，不断提升产品品质、规范服务标准。本公司秉承“社会共生，合作共赢”的理念，在行业中属于口碑传播的佼佼者。
INFINITY is a Japanese local company which mainly manages the domestic sales of well-known Japanese brand electronic products and the export business of Hong Kong Region, Southeast Asia and other places. Its business categories include cosmetic instruments, shavers, personal consumables,cosmetics, etc.

PHARSMART SRL

6.1A4-01

Address: 意大利 米兰省-米兰市-CORSO VITTORIO EMANUELE II, 30 Italy MILAN -MILAN-CORSO VITTORIO EMANUELE II, 30
Tel: +393892662009
Email: hui@pharsmart.com
Web: www.pharsmart.com

Pharsmart 位于国际化大都市意大利米兰，地理位置优越，是一家充满活力的智能大健康公司。自成立以来，积极拓展在欧洲乃至全世界的合作渠道，寻找优质的合作伙伴，通过精良的产品和卓越的服务改善各个年龄阶段不同人群的健康状况，提升全球用户生活品质。
In the exploration, development and production of cosmetics and pharmaceuticals, Pharsmart works with professionals, governments and communities from Europe and the world, in order to create sophisticated products and enhance health at all ages. Leading in the development of intelligent health, it provides better quality services and widely recognized health-beauty products.

ROBEUS

6.1A4-04（01）

Address: 意大利 Italy PESARO-PESARO-VIA SERRA 64 61122
Tel: 020-31556700
Email: fwbin@aoyuan.net
Web: www.aomygod.com

ROBEUS——成立于 1988 年，是意大利的专业化妆品品牌，拥有超过 600 家连锁美容沙龙，产品销往 26 个国家和地区，其仅在意大利市场的年销量就达到 8000 万欧元。ROBEUS 以生物活性物和植物萃取活性 物为有效物，具有安全有效等特性，是深受名媛及高端商务女士喜爱的美容护肤品牌。
ROBEUS - established in 1988, is a professional cosmetic brand in Italy. It has more than 600 chain beauty salons and its products are sold in 26 countries and regions. Its annual sales in the Italian market alone amount to 80 million euros. ROBEUS is a skin care brand that is popular among socialites and high-end business ladies because its products contain bioactive substances.

德国保镖药房有限公司 / Bodyguardpharm GmbH(德国保镖药房有限公司)

6.1A3-13

Address: 德国 Pforzheim-Pforzheim-Carl-Gruner-Str.4 , D-75177 Germany Baden-württenberg-Pforzheim-Carl-Gruner-Str.4 , D-75177
Tel: 020-83840720
Email: lucy@bodijialife.com
Web: mall.jd.hk/index-929812.html

Bodyguardpharm GmbH（德国保镖药房）由德国Pforzheim普福尔茨海市最古老的药剂师Kraus克劳斯家族成立及运营。1889年，克劳斯在慕尼黑开创了家族第一家药房，开启家族药房事业，距今100多年历史。第四代药剂师们通过对高端玻尿酸潜心研发，采用高科技萃取玻尿酸活性分子，打造高品质自有护肤品牌Bodyguardpharm。
The German Bodyguardpharm GmbH is established and operated by the Kraus family, which is the oldest pharmacist family in Pforzheim, Germany. For more than one century, the Kraus family has always been adhering to the principle of "only providing products related to health and beauty". All products of bodyguardpharm are produced under strict standards.

株式会社爱德兰丝 / Aderans Company Limited

6.1A4-02

Address: 日本 东京都-新宿区-东京都新宿区新宿1-6-3 Japan Tokyo-Shinjuku-ku-1-6-3 Shinjuku, Shinjuku-ku, Tokyo 160-8429
Tel: 81-3-3350-3219
Email: asia@aderans.com
Web: www.aderans.co.jp/corporate/english

爱德兰丝集团自1968年创业以来，一直致力于假发的制造与销售，并长年在毛发领域研究开发。在植发、增发、护发有200余项的国际专利，在全球19个国家有64家分公司818家门店，近1万名员工。是国际综合美发相关领域的龙头企业。创业以来，专注解决客户对头发问题的各种烦恼。公司还将业务拓展至美容护肤领域，我司多年来一直致力千追求“安全・安心”，高品质的服务态度，志在将公司打造成综合性大健康美容企业。
Aderans Co., Ltd., has contributed to the development of total hair-related solutions since its establishment in 1968.
Group has 818 stores, 64 companies in nineteen countries overseas.(As of August 31, 2018) celebrated the 51th anniversary of Aderans Co., Ltd., in 2019. Since its establishment in 1968, Aderans has grown and expanded its business pursuits as a leading provider of total hair solu.

株式会社 BEAUTUNNEL / BEAUTUNNEL Co., Ltd.

6.1A3-14

Address: 日本 爱知县-名古屋市-北区元志贺町一丁目5番地 Japan AICHI-KEN-NAGOYA-SHI-1-5 MOTOSHIGA-CHO KITA-KU
Tel: +052 982 7877
Email: k_hayafuji@beautunnel.co.jp
Web: www.celle.jp

株式会社BEAUTUNNEL成立于平成30年11月19日，旗下拥有专业美容护肤品牌CELLE。我们致力于不断革新传统，通过科技和文化增添丰富的多样性，旨在为我们的服务对象开创卓越之美。
BEAUTUNNEL company was founded on November 19th, 2018. It owns the CELLE brand which is mainly engaged in the development and production of beauty products.
The CELLE brand is driven by the same motivations that inspired its founder: make the full power of beauty available to women through outstanding cosmetic treatments that are pioneering, effective – and a pleasure for all the senses.

LION CORPORATION

6.1A4-03

Address: 日本 Japan Tokyo-1-3-7, Honjyo 1-Chome, Sumida-ku
Tel: 021-51699797
Email: huangwen@chinalion.cn
Web: www.lion.co.jp

125年以来，狮王公司始终秉承爱的精神，不断保持创新和成长，努力为消费者带来生活的美好和幸福，创造充满希望的未来，爱享每一天。除了口腔护理领域以外，狮王还在个人护理、家居清洁、药品及宠物用品等领域创造更多的优质产品，深受亚洲各国消费者喜爱。
Lion has been a regular part of everyday life for more than 120 years. In that time, we have seen how ordinary days, one at a time, add up to a lifetime. Moreover, we have come to believe that each new day is the first step into a bright future, and that living every day positively and to the fullest is the essence of happiness.

CW BEGGS AND SONS

6.1A4-04（02）

Address: 加拿大 Canada Montreal-Montreal-9200,chdela Cote de Liesse, QC H8T 1A1
Tel: 020-31556700
Email: fwbin@aoyuan.net
Web: www.aomygod.com

CW 贝格斯世家男士高级护肤品品牌命名致敬于查尔斯．沃．贝格斯绅士，贝格斯先生于 1874 年在芝加哥创立了 Marcelle 香水产品线。我们的品牌继承此宝贵的文化遗产，并发扬倡议真正的绅士价值。CW Main brands and 贝格斯产品包含了真正的绅士全效且安全地履行承诺所需要的一切。产品不包含任何多余的、未经证实的、有害于健康或对环境有害的物质。
CW Bergs Family Men's Premium Skincare Brand Names tribute to Charles Wo. Bergs Gentleman, Mr. Bergs founded the Marcelle perfume line in Chicago in 1874. Our brand inherits this valuable cultural heritage and promotes the true gentleman's value of the initiative. CW Main brands and Bergs products contain everything a true gentleman needs to fully and safely fulfill his promise.

KAO CORPORATION

6.1A4-05

Address: 日本 東京-東京-中央区日本橋茅場町1-14-10 Japan Tokyo-Tokyo-1-14-10, nihonbashi, kayabacho, chuo-ku
Tel: +81 33660 7323
Email: yoshibac@yahoo.co.jp
Web: www.kao.com/cn

花王集团在化妆品、护肤品和洗发护发用品等“美容护理用品”,保健功能饮料以及生理卫生用品等“健康护理用品”和衣物洗涤剂和家居洗涤剂等“衣物洗涤及家居清洁用品”方面，展开面向普通消费者的消费者用品事业。另外，还在“工业化学用品事业”，细致入微地应对产业界的需求，提供工业用产品。花王争取在这些不同领域，立足于消费者和顾客，通过竭诚提供优质产品力求充分满足和丰富世界各国人民的生活。
Striving for the wholehearted satisfaction and enrichment of the lives of people globally through Yoki-Monozukuri implemented from the consumer/customer's perspective.
Kao Corporation would expand its business to include other products that made the everyday lives of people more comfortable such as detergents, feminine and baby care products, prestige cosmetics and other beauty care products.

ABUNDANT NATURAL HEALTH PTY LTD

6.1A5-03

Address: 澳大利亚 Australia NSW-CHATSWOOD-UNIT 23, 376-380 EASTERN VALLEY WAY
Tel: +612402855367
Email: S.BIRKIN@ABUNDANTPRODUCE.COM
Web: www.abundantnaturalhealth.com

Abundant is creating an expanding range of nourishing, pain relieving healthcare products. Proudly 100% Australian own, grown and made. Abundant vouches for the quality, purity and effectiveness of its all-natural formulations.

爱茉莉太平洋 / AMOREPACIFIC

6.1A5-06

Address: 韩国 首尔特别市-首尔特别市-龙山区汉江大路100 ROK(Republic of Korea) Seoul-Seoul-100, Hangang-daero, Yongsan-gu
Tel: 86 021 2329 0666 / 86 21 2329 0666
Email: amorepacificciie@cn.amorepacific.com
Web: www.apgroup.com

拥有70余年历史的爱茉莉太平洋集团是韩国领先的化妆品公司。秉持“与世界分享亚洲之美”的使命，不断以高品质的产品和服务满足中国女性对美好生活的追求，进入中国市场27年来，爱茉莉太平洋已先后引入了九大品牌：雪花秀、兰芝、梦妆、悦诗风吟、伊蒂之屋、赫妍（HERA）、艾诺碧（IOPE）、吕及魅尚萱。
Amorepacific Group is a leading cosmetics company in South Korea with over 70 years of history. With the mission of delivering "Asian Beauty" to the world, Amorepacific has been devoted to meeting the needs of Chinese women desire for a better life with high-quality products and services. Since its entry to China market 27 years ago, Amorepacific has brought 9 brands in China.

香港物产通 / Hong kong 5ctong Co. Ltd

6.1A5-01

Address: 香港地区 香港九龙尖沙咀广东道28号力宝太阳广场803室 Hong Kong Room 803, Lippo Sun Plaza, 28 Canton Road, Tsim Sha Tsui, Kowloon, Hong Kong Region
Tel: 13805710868
Email: baiy@zjmi.com
Web:

2000年12月成立的OUTIN FUTURES是引领K-Beauty市场的GLOBAL BRAND/ODM先驱企业，以与韩国最大的化妆品企业积累的18年业务经验为基础。2017年7月12日在韩国KOSDAQ市场挂牌上市。旗下的诗梅迪+100%玻尿酸浸泡，世界上唯一一款小分子玻尿酸面膜，可以直接渗透皮肤角质层。
OUTIN FUTURES is a GLOBAL BRAND/ODM pioneer in K-Beauty market which has over 18 years of business experience with Korea's largest cosmetics company. It was established in December，2000, and was listed on KOSDAQ market in South Korea on July 12, 2017. Its poem Medici + 100% hyaluronic acid soak, the world's only small molecule hyaluronic acid mask, can directly penetrate the skin stratum corneum.

ENPRANI Co., Ltd.

6.1A5-04

Address: 韩国 ROK(Republic of Korea) 88, Chukhang-daero 296beon-gil, Jung-gu, Incheon, Republic of Korea
Tel: +82-10-2631-5630
Email: kimdon@enprani.com
Web: holikaholika.co.kr

实现女性变美之梦的全球美妆品牌HOLIKA HOLIKA(惑丽客惑丽客)。
Holika Holika always proposes new beauty trends and create styles to erase the image of a normal, unattractive girl, and makes every woman to become beautiful and fascinating.

穆杰罗有限公司 / OFFICINA DEL MUGELLO S.R.L.

6.1A6-01

Address: 意大利 佛罗伦萨-穆杰罗-意大利佛罗伦萨省巴贝里诺·迪·穆杰罗市五一大道13号 Italy FLORENCE-MUGELLO-VIALE PRIMO MAGGIO N° 13-BARBERINO DEL MUGELLO(FI) ITALY
Tel: 18621677286
Email: aichi@lukuntrade.com
Web: www.officinadelmugello.cn

意大利有机个护品牌穆杰罗，已经取得 AIAB 有机认证，符合AIAB有机产品必须是无基因改造成分、无动物测试以及动物成分、无辐射成分、产品包装符合可分解或可回收要求，同时生产过程需要减轻环境负担，减少污染。穆杰罗的产品完全符合这一标准，同时采用的VEGANOK标准更强调了其纯植物特性。产品使用时，因其泡沫细腻易冲洗等性能，可以减少水源浪费与污染。原料成分可被自然生物降解，包装材料可被回收。
WE ARE AN ITALIAN COMPANY THAT IS SELLING NATURAL AND ARTISANAL BODY CARE COSMETIC PRODUCTS WITH THE BRAND"OFFICINA DEL MUGELLO".IN ITALY WE SELL OUR PRODUCTS IN THE SUPERMARKETS,IN THE PHARMACIES AND IN OUR FRANCHISE SHOPS CHAIN.

露伊蕾股份有限公司 / LUI&LEI CO.,LTD

6.1A5-02

Address: 韩国 SEOUL-首尔特别市-首尔特别市江南区德黑兰路141 KR TOWER 11F ROK(Republic of Korea) SEOUL-SEOUL-11FL,KR TOWER, 141, TEHERAN-RO,GANGNAM-GU,SEOUL,KOREA
Tel: 15058210656
Email: 769991390@qq.com
Web: shop2.luinlei2017.cafe24.com

露伊蕾中的“LUI&LEI”是意大利语“他”与“她”的意思,适用于所有肌肤的全效化妆品品牌，采用天然的成分从根本解决肌肤问题,维持最佳的肌肤状态。
"LUI&LEI" in Lui Lei is the meaning of the Italian "he" and "her".
It is a full-effect cosmetic brand for all skin types. And it also uses natural ingredients to solve the skin problems and maintains optimal skin condition.

澳希亚（澳大利亚）有限公司 / OUSIA AUSTRALIA PTY LTD

6.1A5-05

Address: 澳大利亚 Australia Victoria3175-DandenongSouth-42-52 Arkwright Drive
Tel: 020-81250188
Email: 7433757@qq.com
Web: www.ousia.com.au

澳希亚OUSIA成立于2006年，拥有GLAMOURFLAGE格兰玛弗兰、HOLA赫拉护肤品牌、HOLAGANICS赫拉宝贝、英氏YEEHOO等护肤品牌。格兰玛弗兰更是近十年中国企业家收购国外化妆品品牌首个转型成功案例。自2006年引进中国以来，连续多年保持60%-200%以上增长，跃居中国澳洲进口化妆品身体护理品类第1名。赫拉品牌倡导“天然、简单、传统”的护肤理念，已经成为中国CS渠道增长最快和最大的进口品牌。
OUSIA was established in 2006 and has owned skincare brands such as Glamourflage, HOLA, HOLAGANICS, and YEEHOO. Glamourflage is the first successful transformation case for Chinese entrepreneurs to acquire foreign cosmetics brands in the past decade. Since its introduction in China in 2006, it has maintained a growth rate of 60%-200% for many years.

Bing Bang ApS

6.1A6-02(01)

Address: 冰岛 Denmark-13, Gl. Kongevej 11, 1610 København Iceland 丹麦-13, Gl. Kongevej 11, 1610 København
Tel: +4560879181
Email: xi@bingbang.one
Web: www.bingbang.one

冰棒是北欧生活方式品牌，通过多品牌盒子的形式将北欧高品质产品带给健康乐活的现代中国消费者。来冰棒一起体验北欧生活吧。
Bing Bang is a Nordic lifestyle brand. We present quality Nordic products in multi-brand boxes to healthy and happy modern Chinese consumers. Come to Bing Bang and experience Nordic life!

64° Reykjavik

6.1A6-02(02)

Address: 冰岛 Iceland Reykjavik-LJósheimar 16B
Tel: 00354 519 3838
Email: Judith@re101.is
Web: landiparfum.is

64° Reykjavik Distillery is known for its unique hand-crafted liqueurs and spirits from Icelandic nature. Internationally awarded for design. Experience in distillation with the highest quality botanicals and a distinct focus on craft, 64° Reykjavik Distillery has developed the au de perfume LANDI and ICELAND for individuals who appreciate unique quality.

Iceland Europe Travel ltd / Okkar konur í Kína - OK ltd

6.1A6-02(03)

Address: 冰岛 Iceland Reykjavik-101 Reykjavik-Grandagardur 16
Tel: +354 5185400
Email: jonina@icelandeuropetravel.com
Web: icelandeuropetravel.com

Established: 2008 - ID: 670508-1290 Comp. brief description: Tourism - Travel / One-stop service – inbound to Iceland and outbound to Asia Specialty services: Study Visits & Tours; Business delegations, Educational - and Cultural Exchange visits Annual turnover: 1.500.000$ Management: 4 - Office employees: 6 Contractors /partners /service providers: >130

Tulipop ehf.

6.1A6-02(04)

Address: 冰岛 Iceland Reykjavik-Reykjavik-Fiskislod 31
Tel: 003545196999
Email: helga@tulipop.com
Web: www.tulipop.com

Tulipop is a fun and original fantasy island inspired by Iceland's awesome nature and the diversity of the people around us. Get to know the Tulipoppers through the Tulipop cartoons and check out the great collection of Tulipop toys, accessories, home items and more!

BIOEFFECT ehf.

6.1A6-02(05)

Address: 冰岛 Iceland Vikurhvarf 7, 203 Kopavogur
Tel: 0085223712676
Email: amy.wei@bioeffect.com.cn
Web:

Anti-aging premium biotech skincare brand from Iceland WITH uniquely pure EGF reproduced in barley, topical application of which is proven to have a powerful effect on skin rejuvenation processes. BIOEFFECT EGF represents a scientific breakthrough.

Feel Iceland / Ankra ehf.

6.1A6-02(06)

Address: 冰岛 Iceland Reykjavik-Reykjavik-Grandagardur 16
Tel: 3548601313
Email: hronn@feeliceland.com
Web: feeliceland.com

Feel Iceland helps people look & feel their natural best with pure Icelandic collagen food supplements.
We create unique mindfully crafted and effective inside - out beauty and wellness products using locally sourced ingredients from the Icelandic waters to replenish the body's natural resources.

YASUMI Sp. z o.o. Sp. k.

6.1A6-03（01）

Address: 波兰 Poland Kalisz-Kopernika 13
Tel: 0048625013873
Email: jacek@yasumi.pl
Web: yasumi-cosmetics.com

Yasumi was established in 2003 and since then we have been successfully conducting operations in the widely comprehended trade of Beauty, SPA and Wellness. We have created a strong, recognizable franchise brand and used the knowledge gained as a franchise operator to create unique and advanced professional and retail lines of skincare products.

Ziaja Ltd Zak ad Produkcji Leków Sp. z o.o.

6.1A6-03（02）

Address: 波兰 Poland Gdańsk-Jesienna 9
Tel: +48585213517
Email: a.korzeniewska@ziaja.com
Web: www.ziaja.com

Ziaja is a Polish producer of high-quality cosmetics based on natural ingredients for face, body and hair care. The company was established in 1989 by two pharmacists, Aleksandra and Zenon Ziaja. Ziaja offers more than 1000 skin- and environment-friendly products for women, men as well as baby and kids. Ziaja is present in South Korea, Taiwan Region, Vietnam, Japan and China (cross-border).

维罗纳产品专业有限公司 / Verona Products Professional Sp. z o.o.

6.1A6-03（03）

Address: 波兰 Poland Mazowieckie-Warsaw-Al. Krakowska 2
Tel: +48 22 57 75 200
Email: m.gorzycka@vpp.pl
Web: www.veronacosmetics.com

维罗纳产品专业有限公司是波兰一家知名化妆品、护肤品、个人护理产品制造商。公司创建于2003年，拥有自己的研发中心和实验室。设计和生产超过6个化妆品品牌，包括化妆品，面部和身体皮肤护理，头发护理和染色,香水等，也为欧洲著名化妆品品牌从事代工生产及品牌推广业务。到目前为止，本公司在国际上已赢得了良好声誉以及60多个国家客户的信任。
We are a multi-brand cosmetics company from Poland. We started our activity in 2003, and since then we have gained reputation as one the leading cosmetics manufacturers in Europe. We develop unique recipes for make-up, face and body care, hair coloring and fragrances. Our cosmetics are trusted by customers from over 60 countries worldwide.

SWIT

6.1A6-03（04）

Address: 波兰 Poland Mazowieckie -Warsaw -Ta mowa 1
Tel: +48 222723607
Email: m.chwaszczewska@swit.com.pl
Web: www.swit.com.pl

Welcome to Swit - one of the fastest growing companies in Poland today. For 75 years we have been production a range of the best quality cosmetics for face, body and hair. The Swit portfolio of brands include: Exclusive Cosmetics, Aube, CleanHands and much more. Each of them individually focused on satisfaying specific market needs.

HERLA - POL-SKOR

6.1A6-03（06）

Address: 波兰 Poland Poland-Lodz-ul. Pojezierska 90
Tel: +48 42 640 77 45
Email: m.nowak@pol-skor.pl
Web: www.herla.eu

HERLA is the premium brand of the cosmetics for face and body care for SPA and retail – it is the fusion of the luxury and nature. HERLA has been created with the passion for pure nature, its benefits and natural beauty. HERLA works on the copyrighted formulas and recipes and uses only natural rich plant extracts, oils, essential oils and preseervatives.

NOU Poland

6.1A6-03（08）

Address: 波兰 Poland mazowieckie-Warsaw-Wolczynska 69b/73
Tel: +48693450460
Email: kontakt@noupoland.pl
Web: www.noupoland.pl

NOU Poland is a fragrance production company started in 2016. The idea behind the brand has been the production of good quality products at a customer-friendly price. Based on our knowledge of the market and interest in trends and novelties we have been able to create a brand that meets the needs of customers to get good value for good price.

Hair Care Panda / Noble Health Sp. z o.o.

6.1A6-03（09）

Address: 波兰 Poland Wielogora-Jedlinsk-Warszawska 62
Tel: 0048486702887
Email: a.owczarek@noblehealth.pl
Web: www.haircarepanda.com

Noble Health is an European brand that has been active on the market for more than 7 years. In cooperation with experts from various fields it cares for health and beauty. Noble Health products have been awarded for quality and attention to components whose content is unparalleled on the market. The company was the first to use marine collagen in nutricosmetics and dermocosmetics.

MIRACULUM S.A.

6.1A6-03（10）

Address: 波兰 马佐夫舍省-华沙-耶路撒冷大道184B号 Poland mazowieckie-Warsaw-184B, Aleje Jerozolimskie
Tel: 0048 22 203 48 85 / 0048 22 203 48 85
Email: export@miraculum.pl
Web: www.miraculum.pl

100年以来，Miraculum发生了翻天覆地的变化，成为波兰化妆品市场的主要参与者之一。我们的主要重点是开发并营销现代化妆品，包括身体护理，香水，脱毛，彩妆等化妆品。Miraculum旗下有14个化妆品品牌，如Pani Walewska护理系列，Gracja护理系列，Tanita脱毛系列，Joko Make-up彩妆系列，Lider男士剃须系列等品牌。
Over the turn of the centuries, Miraculum had a spectacular transformation, becoming one of the major players in the Polish cosmetics market. Our main focus is on developing and marketing modern cosmetics for face and body care, perfumes, depilation and make-up. In the portfolio of Mira there are 14 brands, including well recognized Pani Walewska, Miraculum, Gracja, Tanita, Lider and JOKO Make-up.

Marba Sp. z o.o. Sp. K.

6.1A6-03（11）

Address: 波兰 Poland 66004 Zielona Góra-Racula-Glogowska 10a
Tel: 0048684512306
Email: office@emarba.com
Web:

Marba has been operating on the market since 2007. We are focused on production activities. Our products are maintained at the highest global level, which is confirmed by a large number of satisfied customers. We produce detergents under both private label as well as our own name. The wide range of products offered by Marba also includes bath cosmetics for children and adults.

Eveline Cosmetics S.A.

6.1A6-03（13）

Address: 波兰 Poland poland-Lesznowola-19 Zytnia Str.05-506
Tel: +48223345815
Email: h.assaad@eveline.com.pl
Web: www.eveline.eu

Eveline Cosmetics is the largest Polish manufacturer and exporter of cosmetics. The brand is present in over 70 countries around the world, while the list of new markets is continuously expanding. Eveline Cosmetics brand covers a wide range of products with particular strengths in skin and body care, make-up, nail care and hair care categories, all at reasonable prices.

David Sp z o.o.

6.1A6-03（14）

Address: 波兰 Nochowo-Go cinna 9 Poland Nochowo-Go cinna 9, 63-100 Nochowo
Tel: 0048 600637465
Email: wojciech@skeenlab.com
Web: www.skeenlab.com

The DAVID company was established by a team of experienced professionals who have been working for many years on a pharmaceutical and cosmetic market.
We are producing and offering wide range of high quality cosmetics like: eyelash serum, hair care product, anti-aging and moisturizing creams.
We are open to the discussion and cooperation opportunities in the field of distribution of our own brand.

CWI

6.1A6-03（15）

Address: 波兰 Poland Mazowieckie-Warsaw-Sokolowska 9/414
Tel: 13588740521
Email: joyce@crossworldinc.com
Web:

CWI core business is importing FMCG products to China. Thanks to understanding European companies difficulties when entering China, and on the same time with over 10 years experience in distribution here we are able to successfully grow business of our partners every year.

Cosmoderma Laboratorium Kosmetyczne s.c.

6.1A6-03（16）

Address: 波兰 Poland Mazowiecki-Warszawa-Tasmowa 1
Tel: +48603554575
Email: anna.piwnicka@cosmoderma.pl
Web: www.cosmoderma.pl

COSMODERMA is a modern and innovative brand, which was created to gratify the needs of women of all ages, looking for effective and professional ways of daily care.
We follow the trends of constantly growing market of cosmetics, combining modernity with tradition. We enrich formulas with the ingredients of modern cosmetology, based on natural and delicate ingredients.

Bella Farmacja Sp. z o.o.sp.k. / Bella Farmacja Sp. z o.o.sp.k. (be organic brand)

6.1A6-03（17）

Address: 波兰 Poland Poznań-ul. Czapla 13/15
Tel: 0048695613516 / 0048518640491
Email: sekretariat@beorganic.com.pl
Web: www.beorganic.com.pl

Bella Farmacja Sp. z o.o.sp.k. are a Polish manufacturer of natural cosmetics - be organic brand. Our cosmetics are produced in accordance with European requirements in ecocerted factory. In our offer you will find natural cosmetics, necessary for the daily care of face and body skin.

Amber Global Consulting

6.1A6-03（18）

Address: 波兰 Poland 90-033 ód ul. Kopcińskiego 77
Tel: +86 138 8020 6874
Email: office@amberconsulting.pl
Web: www.amberconsulting.pl

A Poland-based global consulting company

Effan International (AUST) Pty. Ltd

6.1A6-04

Address: 澳大利亚 NSW-Campsie-207/52, Charlotte Street, Australia NSW 2194-Campsie-207/52, Charlotte Street
Tel: 61-421819824
Email: mandymm@139.com
Web: www.macaka.com.au www.effan.com.au

EFFAN International (Aust) Pty. Ltd. was established in 2010 at Sydney, it is mainly engaged in Australian skincare products business; exporting to Asian Countries, especially to China and South East Asia. The goal of EFFAN is to build a skilled and professional R&D team providing high quality skincare & cosmetics products.

株式会社成易美 / SEIYI BEAUTY CORPORATION

6.1A6-06

Address: 日本 TOKYO-东京都日野市万愿寺四丁目3番3号 Japan TOKYO-4-3-3 Manganji HINO CITY
Tel: 021-52969810
Email: bella@shyizhi.com.cn
Web: www.mnhp.jp

品牌创始人Aoyama从2008年就致力于思考用日本本土温泉水结合先端美容科技，打造对肌肤零负担的温和美容品。2015年，惠之本铺诞生于日本。以为广大女性消费者带来高品质温泉产品为愿景，以自然之力唤醒肌肤活力为品牌目标，持续不断研发拓展产品线。

Since 2008, Aoyama, the founder of the brand, has been thinking about using Japanese hot spring water to combine cutting-edge technology to create a gentle product that has zero burden on the skin. In 2015, MEGUMI no HONPO was born in Japan. We hope to bring high-quality products for female consumer. Awaken skin vitality with the power of nature, and continue to develop and expand product lines.

STENDERS SIA

6.1A6-07

Address: 拉脱维亚 Latvia Rīga-Rīga-Mūkusalas iela 63
Tel: +86 010-58690430
Email: yuan.wenlong@stenders.cn
Web: www.stenders-cosmetics.com/ www.stenders.cn

施丹兰，沐浴护肤的倡导者—来自北欧的传统沐浴文化品牌，被称为拉脱维亚的“国礼”品牌。以好奇心和极致匠心，将波罗的海最受欢迎的沐浴仪式，以前所未有的“生活方式”理念带给每个热爱、向往美好生活的人。施丹兰品牌创立伊始，就赋予沐浴以仪式感，让泡浴乐趣和护肤理念完美结合。以传统古方萃取天然植物精粹，将对生活的向往与热爱，幻化为一场嗅觉盛宴。

STENDERS is a cosmetics brand inspired by northern nature. It pays a special attention to feelings and shopping experience, including design, fragrance, the way of presenting products and customer care culture.

大阪丸屋株式会社 / Osaka Maruya Co.,Ltd

6.1A6-08

Address: 日本 大阪府-堺市-美原区平尾2443番地 Japan OSAKA-OSAKA-Osaka Sakai-shi Mihara-ku Hirao 2443
Tel: 13512130504
Email: jo_zhou@nihongtao.com
Web:

大阪丸屋株式会社是在日本经营多年的综合类公司。
总部位于大阪市中央区，主营业务：护肤美容、日用杂货、食品保健品等等，连同当地厂商为客人提供极具特色的优质产品。
我们的方向——本土、新颖、精致、工匠精神

Osaka Maruya Co.Ltd is a integrated company who gained its reputation in Japan.It's headquater is located in Osaka Central District.It's main business involve in sales and distribustion in the region of Skin Beauty, groceries, food and health care products, With our excellent local provide, we can provide our customer top class product. Our goal: LOCAL; ORIGINALITY; DELICATE; CRAFTSMANSHIP SPIRIT

春金集团 / Musim Mas Holdings Pte. Ltd.

6.1A6-09

Address: 新加坡 Singapore Singapore -Singapore-150 Beach Road, Level 24 Gateway West
Tel: +65 65764207
Email: jiawei.shen@icofgroup.com
Web: www.musimmas.com/cn

春金集团是全球最大的棕榈油公司之一。总部位于新加坡，春金集团的业务囊括了棕油产业链的方方面面。从上游的管理油棕种植园，到中游压榨油棕果实，提炼天然的棕油，再对它们进行深加工，生产一系列高质量的棕油和衍生产品，我们的产品销往全球八十多个国家。

We are one of the largest palm oil corporations in the world. Headquartered in Singapore, our business is involved with every part of the palm oil supply chain: from managing plantations and mills to refining crude palm oil and manufacturing palm-based products.

Hemyval Sarl

6.1A6-10

Address: 瑞士 Switzerland St-Maurice-Ch. du Bois-Noir 14
Tel: +8618867960011
Email: info@swisseve.ch
Web: www.swisseve.ch

Our laboratories which manufacture these products are located in Switzerland, in the heart of Europe, in an alpine environment, mountainous and well-timbered area with a diversified flora surrounded by clear water from natural sources and glaciers.This direct contact with nature motivated us to create our lines of care products, with the brands: SwissEve,SwissMen, SwissSun and SwissBaby.

小林制药株式会社 / KOBAYASHI PHARMACEUTICAL CO., LTD.

6.1A6-11

Address: 日本 Osaka-大阪市-中央区道修町4丁目4番10号 Japan Osaka-Chuo-ku-4-10, Doshomachi 4-chome
Tel: 021-3250-7182*216
Email: tr.qu@shanghai-kobayashi.com
Web: www.kobayashi.co.jp

小林制药株式会社是一家具有120年历史的，以产品开发为主的企业，主要从事药品，医疗器械，日用品，食品等的研发生产与销售。产品不仅在日本销售，还销往世界各地。小林集团的原点是“倾听消费者的声音”，发掘日常生活中尚未被产品化的，但如有的话会觉得特别便利的需求，将其转化为高品质、高附加值的商品。这一理念也体现在“你想到、我做到”的企业标语中，通过不懈的创造革新，坚持追求新鲜事物、给人与社会带来精彩生活。

Our mission is to not only make products that our customers want now but to also develop new and innovative products for our customer's future needs.True to our brand slogan of "You make a wish and we make it happen," we will strive to research, develop, manufacture, and deliver products as quickly as possible.

VGSKIN PTY LTD

6.1A7-01

Address: 澳大利亚 Australia NSW-Sydney-Sevenhills
Tel: 13715920096
Email: info@vgskin.com.au
Web: www.vgskin.com.au

Established in 2016, VGSKIN is an Australian firm that provides first-rate skin care. With our headquarters and facilities in Sydney, Australia, all our products are produced locally. The strong and professional R&D team from Korea secures the superior product standard with cutting-edge research and strict quality control.

Sesderma S.L

6.1A7-02

Address: 西班牙 Spain Valencia-Puzol-Avda. dels Molins, 12 Poligono Industrial La Murta
Tel: +34 961414228
Email: info@sesderma.com
Web: www.sesderma.com

Founded in 1989 by a team of dermatologists led by Dr. Serrano, Sesderma is a laboratory who cares the health and well-being of people. Our motto, "LISTENING TO YOUR SKIN", is what defines us. Our company culture is driven by knowledge, humanity and generosity.

株式会社エイチ·アンド·ビー·ラボ

6.1A7-03

Address: 日本 Japan 東京都-港区-芝大門2-6-6 VORT芝大門ビル9F
Tel: 13615828708
Email: qianyigao@nysochina.com
Web: www.hb-lab.co.jp

H&B Lab来自日本，创立于2016年。在日本超过1500家门店设有销售处。H&B Lab自成立以来一直秉持“健康、洁净、美丽、快乐”的品牌原则，坚持无添加配方、甄选全球天然原料的研发理念。以适合亚洲女性肤质、帮助肌肤回归自然之美的高性价比产品广受消费者喜爱。

H&B Lab is from Japan and was founded in 2016. It has sales offices in more than 1,500 stores in Japan. H&B Lab has been adhering to the brand principle of "healthy, clean, beautiful and happy" since its establishment, adhering to the r&d concept of no added formula and selection of global natural raw materials. Advocate nature, gentle, no add, give the skin natural moisturizing.

AUSTRALIA HEALTH RESEARCH & DEVELOPMENT GROUP PTY LTD

6.1A7-04

Address: 澳大利亚 Australia Quesssland-Brisbane-17 Iris Place, Acacia Ridge, QLD 4100
Tel: +61 7 3216 6880
Email: pa@ahrd.com.au
Web: ahrd.com.au

Australia Health Research and Development Group 澳大利亚健康产品研发集团成立于2005，是澳大利亚保健及食品、化妆品开发的重要推进者，在十年内飞速发展，旗下已有3间分公司。经过几十年来的见证、创新、引领行业的发展，现已成长为澳洲护肤品、保健品和健康食品的扛旗者。而新开创的护肤品也通过创新和优良的质量得到本土人们的喜爱。

AHRD are one of Australia's leading contract manufacturers, based in Brisbane Australia.

The company was established in 2005 and together with our team of experts, we have over 20 years of experience as the leaders in the industry.

株式会社东耀商事 / TOYO TRADING CO., LTD

6.1A7-05

Address: 日本 Japan Tokyo-Tokyo-1-8-19 Minamikamata Ota-ku
Tel: 021-52660625
Email: liugz@shftco.com
Web:

东耀商事株式会社成立于2005年5月，是一家主要中日韩开展业务的综合性商社，业务范围包括食品饮料、化妆品、家用电器、家居百货等。

TOYO Trading Co., Ltd was founded in May.2005 who has a comprehensive business with China, Korea and Japan. The company business scope covers food and drink, cosmetics, electric appliance and housekeeping.

Botique Andaluz, S.L.

6.1A7-06

Address: 西班牙 Spain ALFONSO LASSO DE LA VEGA, 12 – 41013 SEVILLA(SEVILLA)
Tel: 02169990652
Email: hotherocn@163.com
Web: www.langelaroyal.es

Botique Andaluz s.l公司作为西班牙化妆品界的一颗新星，成立于2015年，是L' angela royal品牌的完全拥有者。通过与领先的西班牙INLAB MEDICAL实验室全面战略合作，公司始终专注于世界最前沿的生物科技的发展，目前已经开发出全系列30余款各类化妆品，并在亚洲欧洲等数个国家与地区建立了供销渠道，旗下的安瓶精华产品已成为西班牙高端安瓶的代表品牌之一。

Botique Andaioz SL company is a pioneer in Spanish cosmetics industry. Company was established in 2015. Botique and INLAB MEDICAL would be upgraded to a strategic partnership. In 30 kinds of different products, Ampoule is become benchmark of the beauty industry. Sales channels have been established in Asia and European countries. We have own praise from consumers.

Edgewell Personal Care., LLC

6.1A7-07

Address: 美国 United States of America NJ-Cedar Knolls-240 Cedars Knolls Road, Suite 401
Tel: 021-57486600
Email: ec@amsafeworld.com
Web: www.amsafeworld.com

Edgewell's Private Brands Group, is the world's largest manufacturer of private label razors. We serve major retailers worldwide, working closely with them to provide a consumer–focused and category-driven perspective on private brands. In markets where private label is less developed the PERSONNA brand is often used as an entry-level price point with customers.

沛納金實業有限公司 / PA NA GOLD CO.,LTD

6.1A7-08

Address: 台湾地区 台北市-台北市信義區松山路500號7樓之2 Taiwan Taipei City -7F.-2, No. 500, Songshan Rd., Xinyi Dist., Taipei City 110, Taiwan
Tel: 03-3137629
Email: joan629183@163.com
Web:

台湾沛钠金实业股份有限公司自1973年開始，在台灣花蓮地區設廠製作七彩玉花瓶等類型之藝術品，是台湾地区最早进行七彩玉花瓶加工制作的公司之一，其生产的七彩玉成品在历届台湾工艺品展会上屡获殊荣。2008年，公司率先将七彩玉花瓶引入大陆，并以高级数的商品为销售主轴，迅速吸引了大批收藏家及文人雅士的喜爱。

(PA NA GOLD CO.,LTD.) started making Seven-Color Jade vases in its base in Hualien in 1973, the first company in Taiwan Region to take on the profession of serpentine vase processing. Its Seven-Color Jade works have been awarded in many art selections. In 2008, the company took the innovative move to introduce Seven-Color Jade vases to the Mainland market and focused on the promotion of high-level produc

自然美生物科技股份有限公司 / Natural Beauty Bio-technology Co., Ltd

6.1A7-09

Address: 台湾地区 台北市松勤街9號4樓 Taiwan 4F, No.9, Sonqin St., Xinyi Dist., Taipei, Taiwan
Tel: 0229496663分機8801 / 0229496663, ext.8801
Email: mika.lin@nblife.com
Web: www.nblifw.com

Freyja Oslo AS

6.1A8-01

Address: 挪威 Norway Oslo-Oslo-Klingenberggata 4 0161
Tel: 15267150969
Email: alfie_chen@noromega-cn.com
Web:

Founded in Oslo, Norway, 78° adheres to natural raw materials and pays attention to skin care for sensitive skin groups.

AUSTRALIA INDUSTRIAL PRODUCTION PTY LTD

6.1A8-04

Address: 澳大利亚 Australia NSW-Sydney-Unit 9,175 James Ruse Dr, Camellia,2142
Tel: 13751749186
Email: yejunyi@1-warehouse.com
Web:

AUSTRALIA INDUSTRIAL PRODUCTION PTY. LTD.(AIP) 是一家专供澳洲本地高端市场的美容健康企业。核心研发团队拥有超过30年的澳洲美容保健品开发经验。旗下品牌VK6全线产品，多年以来都受到澳洲多家高端医学美容机构与美容杂志的集体推崇。在本地高端保健品消费人群中，享负盛名。
AUSTRALIA INDUSTRIAL PRODUCTION PTY. LTD.(AIP) is a beauty and health company specializing in Australia's high-end local market. The core R&D team has more than 30 years of experience in the development of Australian beauty and health products. The brand VK6 products have been highly praised by many high-end medical beauty agencies and beauty magazines in Australia for many years.

Alliance Naturelle SAS

6.1A8-07

Address: 法国 PARIS- PARIS France PARIS-PARIS
Tel: 13917115667
Email: Stella@ushopal.com
Web:

Bonnie&Clyde，是一家集齐了全球七个顶级品牌：Natura Bisse悦碧施、Alliance Naturelle安媗、By Terry、Chantecaille香缇卡、Algologie欧华妍、Juliette Has A Gun佩枪朱丽叶和CocoBaba的新奢美妆平台。Bonnie&Clyde拥有线下门店和线上小程序，只选全球极致黑科技的精尖产品，消费者能够在线下精品店看到产品并亲身使用享受优质的美妆体验。
Bonnie&Clyde is a new luxury beauty platform which collects seven top brands in the world: Natura Bisse, Alliance Naturelle, By Terry, Chantecaille, Algologie, Juliette Has A Gun, and CocoBaba.It has offline stores and online wechat applet which only selects the world's top black technology products.Customers can enjoy quality beauty experience in person at offline stores.

Island Rose Dream

6.1A8-02

Address: 汤加 Tonga Nukualofa-Tofoa-Hala maumau koula
Tel: 613 985950118 / 61422256886
Email: info@islandrosedream.com
Web: www.isladrosedream.com

Island Rose Dream is a business dedicated in developing high quality coconut oil based bath, body & beauty products that are ethically made by villagers from the Kingdom of Tonga. For Centuries, Tongans have used natural coconut oil infused with botanical herbal flowers to protect, moisturise, massage and soothe their skin. We are proud to offer traditionally inspired products with a modern touch.

Charming Woods Pty Ltd

6.1A8-05

Address: 澳大利亚 Australia VIC-Hallam-Fcty 6 8-14 Melverton Dr
Tel: 0397965688
Email: accounts@charmingwoods.com marketing@dermalume.com.au
Web: charmingwoodsptyltd

Dermalume黛美珑是一家香氛护肤品牌，澳洲香水手霜先行者。品牌以“以香养心，以草养肤”为理念，打造澳洲制造的香氛护肤品牌。运用法国古老的香氛技术与澳洲珍稀植物，为人们在护肤的过程中营造身心愉悦的环境，得到内在与外在的双重治愈.
Dermalume的联合创始人François是澳洲唯一入围亚太地区排名前三的香氛师，创立自主香氛护肤品牌的同时，也一直服务于国际一线香水品牌。
Our journey started with years of research into what works, testing over thousands of different formulas and active ingredients. Finally, we narrowed our formula to ingredients we felt were truly universally beneficial, leaving your skin shining and light. We want to unite people in this vision: to be confident in our skin, in our beauty, in being ourselves.

LABORATOIRES D ARMOR

6.1A8-08

Address: 法国 欧洲-Europe-Presquile de Pen-Lan-B.P.5-22610 Pleubian-France Pleubian France France-Europe-Presquile de Pen-Lan-B.P.5-22610 Pleubian-France Pleubian
Tel: +86-18217120752
Email: Clare.lou@ushopal.com
Web:

法国高端护肤品牌，1987年诞生在法国布列塔尼半岛，世界唯一在布列塔尼半岛建立实验&研发基地的公司；布列塔尼海域拥有独特的海洋生态系统，为世界上最古老的海洋花园，孕育出800多种珍稀且纯净无污染的天然海藻和植物；所有产品的基底水选择布列塔尼的除盐海水，更好的修护、渗透肌肤，甄选“水中仙”海藻精华，打造海洋系护肤概念，抗老新生，启动细胞“共振”，不只是补充流失营养，更自我生成，恢复肌肤原厂设置。
French high-end skin care brand, born in 1987 in Brittany, France. The sea has a unique marine ecosystem that produces rare, pure and pollution-free natural algae and plants. Desalting Brittany seawater and seaweed essence are selected in base water of all products, creating marine skin care concept ,which can better repair, anti-aging.

Amman Chamber of Industry

6.1A8-03

Address: 约旦 Jordan Jordan-Amman-Jabal Amman-2nd Circle
Tel: 00962 6 4643001
Email: muna.madbak|@aci.org.jo
Web: www.aci.org.jo

The Amman Chamber of Industry (ACI) was established in 1962 as a non-profit organization with a membership that includes industrial enterprises of mining and manufacturing industries, varying in size from large to medium and small.
A nine board members, elected for four-years by the General Assembly, supervise the Chamber.

Nature Talk Pty Limited

6.1A8-06

Address: 澳大利亚 Australia NSW-WESTLEIGH-22 THE SANCTUARY
Tel: +61434978227
Email: admin@naturetalk.com.au
Web: www.naturetalk.com.au

Nature Talk manufactures premium skincare products that are luxuriously natural. Our manufacturing and HQ are located in Sydney, Australia. Our current product range helps combat dull skin caused by air pollution. The combination of products helps cleanse, detox, tone and refresh the skin glow with regular use.

MUSH- ABAL RESOURCES LIMITED

6.1A8-09

Address: 尼日利亚 Nigeria LAGOS-OJO-12/36 APOSTOLIC PLAZA, ALABA INTERNATIONAL MARKET
Tel: 08035954324
Email: momohfunmi@yahoo.com
Web:

WE ARE A LEADING NIGERIA BASED LIFE QUALITY ENHANCEMENT PRODUCTS MANUFACTURER AND DISTRIBUTORS. OUR PRODUCTS INCLUDES DAILY NATURAL FOOD SUPPLEMENTS, BEAUTY PRODUCTS AND MEDICAL CORRECTION PRODUCTS

Etounature

6.1A8-10

Address: 塞内加尔 Senegal SENEGAL-DAKAR-SICAP Liberté 5 N°5453 DAKAR
Tel: 00221338252537
Email: dioufmarietou@hotmail.com
Web: www.etounature.com

Etounature is specialized in the sale of cosmetics and food products100% natural made in Senegal. The company is committed in providing the highest quality 100% natural products for beauty, health and well-being.

DEMIARTS (PRIVATE) LIMITED

6.1A8-11

Address: 津巴布韦 Zimbabwe Mashonaland East-Harare-289 Action Close, Willowvale
Tel: +8618717880848
Email: demiarts2018@163.com
Web:

主营：津巴布韦石雕/木雕/手工制品
将具有当地特色文化的工艺品分享至世界各地
总部位于哈拉雷的Demi Arts拥有非常独特的机会，可以与石雕艺术家保持沟通，从而了解津巴布韦目前正在制作的最新的雕塑作品。
我们有津巴布韦最大的绍纳雕塑收藏。
我们不仅提供非洲最好的艺术品，而且还希望弘扬可以在世界范围内得到启发的文化价值观，求同存异，促进文化交流。
Based in Harare, DEMI ARTS has a unique opportunity to be in constant communication with the stone sculptors and thus privy to the latest cutting edge sculpture being produced in Zimbabwe today.
We have the largest collection of Shona sculpture in Zimbabwe.
We deliver not only the finest African art but also the culture values which can be inspired worldwide.

dakka kadima

6.1A8-14

Address: 叙利亚 大马士革-阿勒颇-AL Shakh Naggar工业城-72022号-192 Syria Syria-Aleppo-Al Shakh Naggar-industrial City-C.r72022 l.r192
Tel: 02158880893
Email: 18001133666@189.cn
Web:

达卡卡蒂玛，位于叙利亚阿勒颇，有着数百年的历史，是一家主要生产化妆品的工厂，产品以天然植物产品为主，如传统的阿勒颇古皂、精油皂、洗发水、沐浴露、乳液、纯露、精油、面膜、冷榨油、香水等。
达卡卡蒂玛2017年进入中国，如今越来越多的中国消费者使用达卡卡蒂玛的产品。叙利亚副总理穆阿利姆在2019年受邀访问中国时，在参观北京世园会期间特别推荐了达卡卡蒂玛。
Dakka Kadima, located in Aleppo, Syria, is a comestics factory with hundreds of years history. It mainly produces natural plants products, such as traditional Aleppo soaps, essential oil soaps, shampoo, shower gel, cream, hydrolat, essential oil, mask, cold pressed oil, perfume and so on. Dakka Kadima entered into Chinese market in 2017, now more and more Chinese customers are using its products.

Tiger jewels pvt lmd / Tiger jewels investments private limited

6.1A8-12

Address: 津巴布韦 Zimbabwe Harare-Harare-15182 Nyatsime Chitungwiza
Tel: +263773266950
Email: tentiger2001@yahoo.com
Web:

We do art and leather products, with large quantities to Europe, America and Asia. We have wood, stone and other art products including jewelry.

Rukhom

6.1A8-15

Address: 塔吉克斯坦 Tajikistan dushanbe-dushanbe，avenue 1，street sharq 2
Tel: +992935050160
Email: Rukhom94@mail.ru
Web: www.rukhom-tajnet.tj

Founded in 1994,mainly exports semi-precious stones

SWLL“Khishti Sabuk

6.1A8-16

Address: 塔吉克斯坦 杜尚别-杜尚别-塔吉克斯坦杜尚别市shohtemur 大街 Tajikistan 杜尚别-杜尚别-Shohtemur Street, Dushanbe, Tajikistan
Tel: +992 888000118
Email: 3511687868@qq.com
Web:

tajinvest公司是塔吉克斯坦国家资产管理招商委员会下属企业，主要从事塔吉克斯坦国家招商、优质产品的推介、招商等工作。
The company is a subsidiary of the National Asset Management Investment Promotion Committee of Tajikistan. It is mainly engaged in the investment promotion of Tajikistan, the promotion of quality products, and investment promotion.

ISTITUTO GANASSINI S.P.A.

6.1B1-01(03)

Address: 意大利 Italy lombardia -milano -via p. gaggia 16
Tel: 18930555452
Email: zhangxiaowen@oulidegroup.com
Web:

意大利格拉西尼股份公司生化制药厂（ISTITUTO GANASSINI RICERCHE BIOCHIMICHE）成立于1918年，是意大利最早的制药厂之一。
格拉西尼旗下拥有Rilastil、Vidermina等品牌，以卓越的品质带给您更健康的肌肤和更愉悦的心情，从而拥有更高品质的生活。
The Italian Company Istituto Ganassini Biomedical Research was founded in 1918 and was one of the first Italian pharmaceutical factory. Ganassini has over Rilastil, Vidermina and other brands, the outstanding quality of products guaranties a heltier skin and a more joyful frame of mind, thereby life quality is better.

Bioylang Comores

6.1A8-13

Address: 科摩罗 Comoros Comores-Moroni-Hatrovou, Route de l'aeroport, Comores
Tel: 002693217966/
Email: info@bioylang.com
Web:

Bioylang is a company that distillate essential oils and produce cosmetics products, trading on vanilla, clove, coconut oil and other spice products and handy crafts.

LABO INTERNATIONAL S.R.L

6.1B1-01(01)

Address: 意大利 Italy veneto -padova-via piazza zanellato 5
Tel: 18930555452
Email: zhangxiaowen@oulidegroup.com
Web:

Labo Cosprophar AG（莱珀）品牌于1986年注册于瑞士的巴塞尔。是一家致力于为消费者创造高效安全的头发护理护肤品以及化妆品的专业机构。
The Labo Cosprophar AG brand was registered in 1986 in Switzerland (Basel).
Labo is a Company that works for consumers by creating highly efficient hair and skincare products and cosmetics.

Kelemata Srl

6.1B1-01(02)

Address: 意大利 Italy piemonte -caselle torinse Torino -via alle fabbriche 75
Tel: 18930555452
Email: zhangxiaowen@oulidegroup.com
Web:

百年品牌Venus一直是意大利消费者青睐有加的品牌，药剂师Achille Bertelli创造了Venus面霜并迅速成为在米兰贵族和资产阶级女士的最爱。Venus集团于1967年收购了Kelemata公司，吸引了更多意大利和世界化妆品史上有重大影响的大品牌进驻集团。
The centenary Venus Brand is one of Italians consumer's favorite brands, in 1981 the pharmacist Achille Bertelli created the Venus face cream which quickly became the most loved cream by Milan aristocracy and bourgeoisie women. At the beginning of the twentieth century and after the First World War, Venus became the best-selling Italian cream.

L. MANETTI-H.ROBERTS S.P.A.

6.1B1-01(04)

Address: FIRENZE（FI）VIA PELLICCERIA 8 CAP Campi Bisenzio Toscana Italy
Tel: 18930555452
Email: zhangxiaowen@oulidegroup.com
Web:

L.MANETTI – H. ROBERTS S.P.A. is a company subordinated to the Italian Bolton Group whichwas founded in 1949 and was the first Italian FMCG. It owns over 50 famous brands that include foodstuff, home nursing, bonding agents, personal care and beauty treatment. The products are distributed worldwide in 139 countries, franchised shops, pharmacies and cosmetics shops. The company's annual earnings.

OULIDE GROUP S.R.L.

6.1B1-01(05)

Address: 意大利 Italy Toscana -Campi Bisenzio-Strada Parco della Marinella, 18
Tel: 18930555452
Email: 138555714@qq.com
zhangxiaowen@oulidegroup.com
Web:

欧俪德集团成立于2012年，收购合资了10家多公司的品牌。
欧俪德处理种类繁多的产品包括：化妆品、护肤品、面护理、身体护理、婴儿护理产品及快速消费品。
Oulide Group was founded in 2012。
Oulide purchased joint venture with more than 10 companies. The wide range of products treated by Oulide includes: cosmetics, skincare, face care, body care, baby care products and FMCG.

CONTER S.R.L.

6.1B1-04

Address: 意大利 Italy LODI VECCHIO-LODI VECCHIO-VIALE EUROPA 12 CAP 26855
Tel: 021-32568835
Email: Lucy@ospace-china.com
Ben@ospace-china.com
Web: www.sodalisgroup.com

1976年，意大利领先的美容、个人和家庭护理市场集团之一。
专注于身体护理，头发护理和皮肤护理，但涵盖所有其他相关类别。
标志性自主品牌，在全球40多个国家销售。1998年创立 Conter S.r.L. 康黛有限公司成立，创立Tesori d 'Oriente【东方宝石】，从那时起直至今日，东方宝石香氛护理品牌成为sodali集团的拳头产品。
One of the leading Italian Groups in the Beauty, Personal and Home Care markets. Focused on Body Care, Hair Care and Skin Care, but covering all other relevant categories. Iconic own brands, sold in more than 50 Countries around the world.The lotus fragrance series is recommended by many celebrities, and the monthly sales volume exceeds 40w bottles.

HELLEO

6.1B1-07

Address: 希腊 Greece EthnikisAntistasis 136, Vasilies 71500, Heraldion,Greece
Tel: 021-68971108
Email: sales7@camelotcn.com
Web:

Helleo company welcomes all those who wish to switch to a more natural, more qualitative lifestyle. We are a family business with great passion for the cultivation of olive trees and every pure product they can give us. With environmental awareness and respect for tradition, we cultivate our olive groves in the region of Viannou in Heraklion of Crete.

巴黎巴菲集团 / GROUPE PANTHER

6.1B1-02

Address: 法国 France BORDEAUX-GRADIGNAN-17 AVENUE DE LA MADELEINE
Tel: 021-54848659
Email: laure.bassereau@groupepanther.com
penny.gao@synchtech.cn
Web: fr.cottage.tm.fr

法国被誉为香水王国，那里诞生了世界上顶尖的香水品牌，拥有先进的制香工艺与顶尖技艺的调香师。1972年，法国的Antoine Madrid（安东尼博士）与Herve Madrid（荷佛博士）合作创立Panther集团并开始专注香水的研发制作。
1990年，他们获得灵感启发，首次尝试将浪漫的法式香水与沐浴露巧妙融合，发明第一支香氛沐浴露，自此赋予洗护产品更为动人的嗅觉灵魂，Cottage悠香伊品牌由此诞生。
Cottage is a brand of the Panther Group. It promises to let you enjoy the delights of nature while tending to your body, with a broad range of hygiene and personal care products.
Searching for a perfect balance between care and pleasure, Cottage offers a peerless sensorial experience through very high-quality formulas and incredibly creamy textures.

宝洁 / PROCTER & GAMBLE

6.1B1-05

Address: 美国 俄亥俄州-辛辛那提-宝洁公司 United States of America Ohio-Cincinnati-The Procter & Gamble Company, 1 P&G Plaza
Tel: 18664857157
Email: yili.er@pg.com
Web: us.pg.com

宝洁公司在全球大约70个国家和地区开展业务。宝洁全球所经营的65个领先品牌畅销在180多个国家和地区，每天为全球50亿的消费者服务。
通过坚持用细微但有意义的方式美化消费者每一天的生活----宝洁公司得以180多年保持持续的增长。宝洁公司拥有众多深受信赖的优质领先品牌。
Our brands are trusted in millions of living rooms, kitchens, laundry rooms, and bathrooms—and have been passed down from generation to generation. Over the course of 181 years, they've challenged convention, led innovation, and helped shape culture.
But no matter how much we grow, we always keep ourselves grounded in our deep-rooted purpose, values, and principles.

Farmaceutici Dottor Ciccarelli Spa

6.1B1-03

Address: 意大利 Italy via Clemente Prudenzio, 13, 20138 Milano, ITALY
Tel: +86-021-32568835
Email: lucy@ospace-china.com
Web: www.ciccarelli.it

我们是意大利最受欢迎的家族企业之一，成立于1821年。1905年我们生产了意大利历史上第一支牙膏，德康美品牌由此而来，至今在意大利排名第一。我们的产品以同样的品质、优雅和意大利风格远销到60多个国家，且每年都在不断增长。
We are one of the most popular Italian family companies, founded in 1821, we were the first to produce a toothpaste in 1905 with Pasta del Capitano brand, that is still No.1 in Italy. We export the same quality, elegance and Italian style in more than 60 countries growing constantly every year.

Blue Skin Asia Limited

6.1B1-06

Address: 法国 France HongKong SAR-Central-21F,On Hing Building,1 On Hing Terrace
Tel: 051569869019
Email: info@blueskin-prc.cn
Web:

Blue Skin是一家专注于个人洗护产品研发生产的法国企业，成立于1999年，在加拿大与西班牙设有生产基地。集团成立19年来，产品在全世界20个国家均有销售。旗下洗手液品牌(Bacti Control)在法国与加拿大具有领先地位，自上市全球已累计售20多亿瓶。Blue Skin 致力于追求产品的创新与品质的提升，为更多人士带来健康品质生活。
Blue Skin is a French enterprise focusing on the research, development & production of personal washing & care products, which was founded in 1999, and has production bases in Canada and Spain. Since the Group was founded 20 years ago, its products have been sold in 20 countries and regions all over the world.

JEMA ROSE SKINCARE LIMITED

6.1B1-08

Address: 澳大利亚 Australia auckland-auckland-unit 10, 135 cryers road, east tamaki
Tel: 0220616006 / +64 220616006
Email: lara@jemarose.co.nz
Web:

成立于美丽的新西兰奥克兰，8+MINUTE 聆听现代女性对肌肤护理的渴求，从新西兰的纯净水源和天然植物中获取灵感，在美容护肤领域中寻觅最尖端的科技——8+MINUTE坚信健康完美的肌底可以让每位女性的肌肤从内而外散发光彩、自信从内而外闪耀光芒。
8+MINUTE 专业的科研团队拒绝生硬的配方设计，从需求入手、用科技升华、点滴凝聚大自然臻萃，精心融入每一款配方中。
When it comes to skin treatment, 8+MINUTE understand that beautiful skin and true radiance can only come from natural, healthy dermal cells. All our products combine the best of nature's nourishing ingredients with the latest technology to maximise your skin's natural strength and to reveal a smooth, healthy, rejuvenated appearance.

Nativebliss Australia Pty Ltd

6.1B1-09

Address: 澳大利亚 Australia VIC-Burwood-6/21 Huntingdale Road
Tel: 18957447201
Email: info@nativebliss.com.au
Web: www.nativebliss.com.au

原之悦是澳大利亚天然有机母婴品牌，产品包括全天然和有机的个人护肤品和居家清洁用品。
原之悦产品配方完全以植物为基础，我们使用天然和有机的冷榨植物油，植物提取物和植物精油来用心调制。所有成分都是以对婴儿，幼儿和妈妈的娇嫩皮肤100%安全和有效为选择依据。原之悦产品不含人造化学品。
我们最畅销的产品包括食用安全的无酒精泡沫免洗洗手液，和澳大利亚认证有机护肤系列。
原之悦产品在澳大利亚药房和有机商店销售。
Nativebliss is passionate about developing products to give you a Healthy and Natural way of life.We use only pure natural and organic ingredients, strictly no chemicals.Our baby care range even get certified by Australian Certified Organic. Our NativeBliss & Kidsbliss brands cover products of skincare and general cleaning. Our mission is to create and share Australian Bliss to all over the world.

Spa Dent Inc.

6.1B1-12

Address: 加拿大 Canada ON-Waterloo-254-55 Northfield Drive
Tel: 519-725-4025
Email: marcia@spa-dent.com
Web: www.spa-dent.com

SPA DENT NATURALS 是一家加拿大家族公司，专营研发及生产各类美白洁齿健康口腔护理产品，不仅覆盖诊所医用级别同时还包含日常家庭系列。品牌的宗旨是：健康口腔，自信每一个笑容。
SD Brand- Teeth whitening Dental care products, include a range of both teeth whitening and complimentary oral care products for dental and retail markets, branded and private label. All of our products are licensed in Canada as Natural Health care products, manufactured in GMP facility with Natural Health products registration.

INTUISKIN

6.1B2-04

Address: 法国 France CROLL-CROLL-PARC ACTIVILLAGE DES FONTAINES 38926 CROLLES CEDEX
Tel: 057187168770
Email: magie.guan@shixianwork.com
Web:

IOMA 艾欧码是创立于2008年的法国高端护肤品牌，在法国有300多家实体店，全世界30个国家都有他的身影，是联合利华首个被收购的高端护肤品牌。每款产品都基于千百万次的皮肤实验样研究而得，IOMA 法语译为 « à moi 为我»，旨在说明：个性化定制护肤的新概念，为您打造个性化护肤品。
IOMA is a luxury French brand of skin care based on evidence. Founded in 2008, the group is present in about 300 stores in France and several other countries, IOMA offers proven effectiveness care, created and formulated from The IOMA Skin Atlas, a database of exception of more than 1 million diagnoses, which continues to grow every day. IOMA means "to me". Just read in the opposite direction.

Neodual SK, s.r.o.

6.1B1-10

Address: 斯洛伐克 Slovakia Tichá 34 Bratislava Slovakia
Tel: 420724045172 / 00420724045172
Email: marianskovajsa@seznam.cz
Web: www.zeencollagen.com
www.neodual.cz

Family company established in 1993 in Bratislava and Prague. Will be representing Zeen Collagen.

Wave Corporation Company,Limited

6.1B2-01

Address: 日本 Japan Kinki-Osaka-7-7-1, Kawaramachi, Chuo-Ku
Tel: 18057186054
Email: zhaoqingliu@sbitic.com
Web:

Established in 2002 in Osaka, Japan, Spa Treatment owns over 30 years of skincare research experience. Basing on the concept of Spa skincare therapy and various Asian skin requirements, Spa Treatment have developed six series of products, hoping that modern people with fast pace can enjoy spa-level curative care at home.

JAYJUN COSMETIC Co.,Ltd.

6.1B2-02

Address: 韩国 首尔特别市-江南区-论岘路(驿三洞)526 ROK(Republic of Korea) Seoul-Gangnam-gu-526, Nonhyeon-no, Yeoksam-Dong
Tel: 0571-56927575
Email: yeyihan@jayjun.com.cn
Web: www.cn-jayjun.com/index

JAYJUN捷俊在2015年于韩国首尔成立，总部设于韩国首尔江南区论岘路526号。怀着让皮肤保持年轻的信念，JAYJUN捷俊 以韩国知名整形外科和专业皮肤科医美团队为技术支持，经中韩两国化妆品专家联合研制，共同提出“Responsible for Beauty(为美丽负责)”的口号。以改善亚洲男女性肌肤问题为宗旨，是韩国最具影响力的护肤品牌之一。JAYJUN捷俊将竭尽全力将公司打造成全球化的跨国公司。
JAYJUN was established in Seoul. With the belief of keeping skin young, JAYJUN was well-known as plastic surgery and professional dermatology aesthetic medical team regard as technical support. After the joint research and development of cosmetics experts from China and South Korea, JAYJUN put forward the slogan of "Responsible for Beauty".

Sanatio Naturalis Ltd

6.1B1-11

Address: 英国 United Kingdom London-Third Floor, 207 Regent Street
Tel: +447760349885 / 00447760349885
Email: info@sanationaturalis.com
Web: www.sanationaturalis.com

Sanatio Naturalis源自拉丁文，意为“大自然的治愈能力”。芳香疗法借助于植物的力量，带来身、心、灵的和谐，将天然珍贵的植物萃取精华，温和融入人体肌肤细胞，滋养及活化肌肤。从植物到皮肤，天然纯净是Sanatio Naturalis产品的核心。我们坚信美丽始于自然，致力于天然成分，其卓越的治愈能量和芳香气味。我们热爱植物，不断探索天然植物花卉中的美丽能量，我们寻找最纯净的资源，甄选全球优质产区，滴滴精粹。
The holistic beauty secrets of plants have been passed from generation to generation. The ancient Greeks shared them, inspiring our Latin name, Sanatio Naturalis, the healing power of nature. From Plant to Skin, nature is at the heart of all Sanatio Naturalis products. Our quest starts with the raw materials, their outstanding therapeutic efficiency and depth of fragrance.

Dental-Kosmetick GmbH & Co. KG

6.1B2-03

Address: 德国 Germany 萨克森自由州-德雷斯顿-凯瑟琳大街4号
Tel: 0574 8911 9991
Email: richardshu@163.com
Web:

DENTAL-Kosmetik GmbH & Co. KG, a future-orientated company with long tradition, was founded in 1907. The long-established brand Chlorodont made the Dresden toothpaste world famous. As a company with its own research & development department, we aspire to be the best in the development, manufacturing and sales of innovative products for dental care and oral hygiene. State-of-the-art production fac

NOVA GROUP Pty., Ltd

6.1B2-05

Address: 澳大利亚 Australia NSW 2208-KINGSGROVE-Unit 5, 192 Kingsgrove Road
Tel: 61-2-9502-1318
Email: ning@nova.com.au
Web: www.nova.com.au

NOVA GROUP是来自澳大利亚的护肤品专业公司。自1999年以来NOVA创建了自己的品牌，二十年来CHARIS®和Angelina®系列护肤产品在当地和国际市场上深受欢迎。与此同时，NOVA GROUP在私人品牌定制方面，运用专业的设备、领先的概念，为世界各地客户精心制作了数百种品牌产品。
NOVA GROUP is a completely Australian owned and operated company since 1999. We have created our own brands, CHARIS® and Angelina® series that are very popular in the local and international market. In 20 years, NOVA GROUP has crafted hundreds of products, within our own brands and for clients.

欧莱雅 / L'Oréal

6.1B3-01

Address: 法国 巴黎-14 Rue Royale，75008 France Paris-14 Rue Royale, 75008
Tel: 021-52008663
Email: angel.JIN@loreal.com
Web: www.loreal.fr

欧莱雅致力于美丽事业已有超过100年的历史。集团旗下拥有36个多元而互补的国际品牌，2018年全球销售额高达269亿欧元，在全球拥有86,000名员工。欧莱雅战略的核心是研发与创新，以及一支拥有3,993人的研发与创新团队专门致力于满足全球各地消费者对美的需求和向往。
L'Oréal has devoted itself to beauty for over 100 years. With its unique international portfolio of 36 diverse and complementary brands, the Group generated sales amounting to 26.9 billion euros in 2018 and employs 86,000 people worldwide. R&I, and a dedicated research team of 3,993 people, are at the core of L'Oréal's strategy, working to meet beauty aspirations all over the world.

COSTORY Co. , Ltd

6.1B3-04

Address: 韩国 ROK(Republic of Korea) Gangwon-do-Won ju-si-246-1,Seop jaesambo-gil
Tel: 13798924132
Email: zoelu@weilansong.com
Web: www.costory.co.kr

COSTORY以“化妆品的本质”为基础，是提供品牌和产品的全球美容品牌集团。为打造“化妆品的本质”，致力于通过与制造商的技术合作和共同发展，来提高产品质量，发现新市场。集团拥有众多化妆品品牌，其中最知名品牌为papa recipe春雨——创始人为患有肌肤问题的女儿研制出的安全的化妆品品牌。
COSTORY is a global beauty brand group that provides brands and products based on the"essence of cosmetics" in order to present sustainable beauty to customers and society. Since its establishment in 2012, COSTORY has been operating 5 brands(papa recipe, INGA, MUSTUS, Dressing82 and TTITTANG) with strong brand identities after analyzing consumer needs and various lifestyles.

唯兰颂经营咨询株式会社 / WEILANSONG CONSULTING COMPANY CO., LTD

6.1B3-07

Address: 韩国 ROK(Republic of Korea) Seoul-Yeongdeungpo-gu-25,Seonyu-ro 13gil
Tel: 13798924132
Email: zoelu@weilansong.com
Web: www.vivlasmall.com

唯兰颂集团在韩国、中国、日本、法国均设有子公司，横跨品牌、市场营销、销售、物流、文化、金融投资等多个专业领域，创下傲人业绩。今后也将秉持可持续发展理念，打造国际化妆品综合平台集团。
本次进博会，集团将携韩国个性轻奢的护肤彩妆品牌VIVLAS（中文：唯兰颂/代言人：宝儿BOA、赖冠霖、宋雨琦）和全新的维他命护肤品牌KOUY蔻屿的全线展品亮相。
Weilansong is global beauty platform group headquartered in South Korea holding subsidiary companies in China,Japan,and France.Our group has achieved success in many professional fields,such as branding, marketing,sales,logistics and financial investment.This time, we are proud to be present our unique luxury cosmetic brand "VIVLAS" and vitamin skin care brand “KOUY” at CIIE 2019.

株式会社TAANE / TAANE Co. Ltd.

6.1B3-02

Address: 日本 宮城県-仙台市宮城野区-中野 5-7-15 Japan Miyagi-Sendai-5-7-15 Nakano, Miyagino-ku
Tel: +81-22-388-8278
Email: hashiba@taane.co.jp
Web: taane.co.jp

日本特殊技术产氢抗衰老「艳水素颜」系列化妆品生产商。有氢面膜，氢精华液，氢酵素洁面粉等使用时产生丰富的氢分子和负氢离子的最新氢技术抗衰老基础化妆品，帮助您展现最美丽的自己。同时还有「今日水素」，「水素瘦身」「水素美目」「水素美白」...等丰富的日本专利技术食用氢（H·H-）保健抗衰老健康食品。美丽健康是我们共同的愿望。
We, TAANE Co. Ltd., are the manufacturer of anti-aging cosmetics series named "TUYA-SUISO-GAO" which generates Hydrogen by using an unique technique in Japan. This series consist of face mask, serum and face wash powder. We also exhibit our anti-oxidant dietary supplement at our booth in Medical Equipment & Health Care Products hall.

株式会社资生堂 / Shiseido Company, Limited

6.1B3-05

Address: 日本 东京-港区-东京都港区东新桥 1-6-2 Japan Tokyo- Minato-ku-1-6-2, Higashi-shimbashi, Minato-ku, Tokyo 105-8310, Japan
Tel: 86-21-35908008
Email: chenhaijia@shiseido.cn
Web: www.shiseidogroup.com

资生堂于1872年作为日本第一家西式药房正式成立。之后逐渐发展成为一家化妆品公司，为人们提供东方和西方融合的最先进的技术和最出色的美学。现在，作为一家“源于日本，制胜全球”的国际化妆品公司，资生堂也已成为代表世界上最高品质的化妆品品牌。资生堂的全球护肤品，化妆品以及香水的选择，包含了高性能类别的特殊护肤品和亮白系列,资生堂不仅仅提供身体护理和防晒类的商品，也同样有提供给美容院和美发沙龙的专业产品。
Shiseido was founded in 1872 as the first Western-style pharmacy in Japan. The business has been evolved and is now one of the largest beauty companies in the world. As a Japanese pioneer of advanced technologies and innovations for beauty, Shiseido offers brands covering skincare, makeup, fragrance, professional hair and healthcare.

MTG Co., Ltd. / MTG Co., Ltd.（株式会社MTG）

6.1B3-08

Address: 日本 Aich-市-名古屋 Japan Aich-Nagoya-Head Office/Research and Development Center MTG No. 2 HIKARI Bldg., 4-13 Honjindori, Nakamura-ku,
Tel: +0081524815001
Email: cuicui.liu@mtg.gr.jp
Web: www.mtg.gr.jp

Beauty equipment and Healthy equipment brand company.
MTG has built its business developing attractive brands around the themes of Beauty and Wellness.We propose the creation of new products, in order to make people more beautiful and healthy.

WELEDA AG

6.1B3-03

Address: 瑞士 Switzerland Möhlerstraße 3 73525 Schwäbisch Gmünd
Tel: 021-27690070 / 021-37690070
Email: jackieshen@eu-source.com
Web: www.weleda.at www.weleda.com

1921年，在人智学创始人STEINER医学博士的倡导下，医药界的精英聚集瑞士，创立了一家制造天然疗方与保养品的公司，提供真正最高品质的产品服务人类，这就是WELEDA 维蕾德公司。
Weleda - a pioneer and a world-leading manufacturer of holistic natural cosmetics and anthroposophical medicines which bring people healing, well-being and vitality.
Weleda's three main sites are close together, with our headquarters in Arlesheim, Switzerland just a few kilometres from the Weleda site in Huningue, France.

Unilever Asia PTE LTD

6.1B3-06

Address: Singapore #06-22 Mapletree Business City, 20 Pasir Panjang Road
Tel: +86 21 2212 8211
Email: Jessica.Wang@unilever.com
Web: www.unilever.com

联合利华是世界领先的家居护理、美妆和个人护理、食品、茶和冰淇淋产品的供应商之一，旗下拥有400多个品牌，产品畅销全球190多个国家和地区。每一天全球有25亿消费者使用我们的产品。2018年全球销售总额达510亿欧元，其中超半数的业绩来自发展中国家和新兴市场。
Unilever is one of the world’s leading suppliers of Beauty & Personal Care, Home Care, and Foods & Refreshment products with sales in over 190 countries. On any given day, 2.5 billion people use Unilever products to feel good, look good and get more out of life – giving us a unique opportunity to build a brighter future.

LEGO A/S

6.1B4-01

Address: 丹麦 比隆-Aastvej 1, 7190 Billund Denmark Billund-Aastvej 1, 7190 Billund
Tel: 18621610967 / 18516227392
Email: clothilde.yang@LEGO.com
Web: www.lego.com/zh-cn

乐高集团是一家总部位于丹麦的家族企业，集团致力于通过玩乐的力量以启迪和培养未来的建设者。以乐高积木颗粒为基础，乐高玩乐系统能够让儿童和粉丝自由拼搭，尽情发挥想象力。1932年，乐高集团由Ole Kirk Kristiansen 创立于丹麦比隆.“乐高”的品牌名称源于两个丹麦语单词“LEg”和“GOdt”，意为“玩得快乐 (Play Well) ”。如今，乐高已经成为全球领先的玩具制造商之一，其产品销往全球140多个国家和地区。
The LEGO Group's mission is to inspire and develop the builders of tomorrow through the power of play. The LEGO Group was founded in Billund, Denmark in 1932 by Ole Kirk Kristiansen, its name derived from the two Danish words LEg GOdt, which mean "Play Well". Today, its products are now sold in more than 140 countries worldwide.

CARIOCA S.P.A.

6.1B4-02

Address: 意大利 Via G. Verga, 40ter I-10036 Settimo Torinese TO Italy Via G. Verga, 40ter I-10036 Settimo Torinese TO
Tel: 13127791862
Email: zhongxin@mg-pen.com
Web:

CARIOCA快乐画创立于意大利，专注儿童画材半个世纪，是“意大利制造”中最优秀的品牌之一，2019年与晨光文具达成战略伙伴关系，进一步拓展中国市场。CARIOCA快乐画2019年新款首发“脸谱彩绘笔”为意大利原装进口，采用食品级颜料，经严格的皮肤测试，可直接接触皮肤。不用担心污染衣物，只需清水就可轻松洗净。
For over 50 years, CARIOCA® has been the symbol of the best made in Italy, with products designed to develop children's creativity in a shared game of inventiveness and dexterity. To further explore China market, Carioca s.p.a. signed a strategic partnership agreement with M&G as its long-term exclusive distributor in China.

HENGLITAI LATEX Co.,Ltd.

6.1B4-05

Address: 泰国 Thailand Sumut sakhon-Krathumbaen-30/32 Moo 5,Don Kai Di
Tel: 02031564053
Email: 284950382@qq.com
Web:

泰国恒利泰实业集团，集团集研发、生产、供应、销售、服务于一体，中泰内衣设计大师情理打造，精选顶级精湛面料，一流工艺，匠心巨制。
Thailand Henglitai Industrial Group, set research and development, production, supply, sales, service in one.Sino-Thai underwear design masters do their best to build, select top fabrics, first-class technology, is a huge system.

MAGIL S.R.L

6.1B5-01

Address: 意大利 Italy LAVAGNA-PORTO DI LAVAGNA 160-161 CAP 16033
Tel: 86 21 61574927
Email: sandy.guo@marzelo.cn
Web: marzelo.cn

MAGIL is an Italian leading fashion brand for children's wear. Based in Lavagna, MAGIL has a history of over 50 years. Focusing on pure Italian design and handmade, MAGIL has been enjoying the popularity of market at home and abroad. Under the guidance of Ms. Maria Chiara Maggi, the brand owner and creative director, MAGIL continues to make a dreamy world for all the children across the world.

Habermaass GmbH

6.1B4-03

Address: 德国 Germany Freistaat Bayern-Bad Rodach-AVGUST-GROSH SHTRASSE, 28-38 96476
Tel: 0512 62981066
Email: marketing@kidspacechina.com
Web:

超过70年历史的德国儿童产品制造商生产以设计，品质，安全性以及最大限度关怀儿童的家具和游乐产品，设计和制造激发孩子新发现和挑战力的高品质产品，孩子和大人都被HABA产品的儿童空间魅力折服。
In 1938 the Habermaass GmbH was founded as a "factory for fine wooden toys".. HABA's company philosophy is based on one simple principle: Children are the most important things in life. HABA is designed and manufactured in Germany!

环亚香港集团有限公司 / TRANS-ASIA HONG KONG GROUP LIMITED

6.1B4-06

Address: 香港地区 中国香港-港岛东区-柴湾祥利街29-31号国贸中心2105室 Eastern District of Hong Kong Islan -Room 2105, Trend Centre, 29-31 Cheung Lee Street, Chai Wan, Hong Kong, China
Tel: 15901997221
Email: yun_jin58@163.com
Web:

BLOCCO 5，长期以来坚持原创设计，在全球寻找最具原创精神的设计师与品牌合作，我们相信模仿难成经典，自我方能铸就品牌。BLOCCO 5是一家对鞋履材质与工艺有着极致追求的品牌，一直坚持在最具匠心工艺的意大利手工坊打造产品，完美诠释“择一事，终一生”的工匠精神。Luxury shoes, lovely price”，以超高性价比带来奢侈品牌鞋履的穿着体验是品牌秉承的一贯理念。
As an emerging luxury footwear brand, BLOCCO 5 has long been adhering to the original design and seeking to enter into cooperation with the most original designers and brands in the world, with the firm belief that a classic brand is solely based on original design rather than imitation. Just as its slogan says "Luxury shoes, lovely price".

Ilsol Apparel

6.1B5-02

Address: 韩国 ROK(Republic of Korea) Seoul-Seodaemun-gu-2, Hongjenae 2na-gil
Tel: 13963171191
Email: 2985252872@QQ.com
Web:

Ilsol Apparel is OEM for all BRANDS, own brand Kidpia, Na Baby has patent trademark. Although we havethe largest market share in the domestic industy, we want to grow into a company that will expand into the world rather than the domestic market.

CRIA LIMITED

6.1B4-04

Address: 新西兰 New Zealand Auckland-Remuera-39 Victoria Avenue
Tel: 13524859991
Email: jon.xue@cria.co.nz
Web: www.cria.co.nz

CRIA公司位于新西兰的工业、商业和经济贸易中心——奥克兰。
艺术源于自然，毛利人常年居住在海洋、河流、湖泊和森林环绕的自然环境中，植物和自然给了毛利人创作的灵感，并且让他们明白了来自自然的滋养是多么的宝贵。
CRIA，在新西兰毛利人的语言中表示“新生的小羊驼”，象征生机、健康、活力。正如毛利语的中文释义一样，CRIA品牌创立的初衷就是将新西兰天然、健康、蓬勃的生命力带给每一个人。
CRIA selected from the original material – the most high-quality pastures, sheep, alpacas, wool, alpaca fiber, to the final products – high-quality children pillows, quilts and baby blanket. CRIA's objective is to bring the warm care from southern hemisphere to northern hemisphere to our children.

SKECHERS KOREA CO.,LTD.

6.1B4-07

Address: 韩国 ROK(Republic of Korea) 9F, TWINCITY Namsan Tower, 366 Youngsan-gu, Seoul, Korea
Tel: 021-6177-8896
Email: vivian_zhang@skechers.cn
Web:

1992年，SKECHERS斯凯奇品牌诞生于美国加州曼哈顿海滩，截止至2018年底，斯凯奇已经发展成为全球知名的运动及生活休闲鞋类行业领导者，市值高达46亿美元。
经过27年的不断发展与突破，斯凯奇引领潮流、舒适、创新，已经成为全球时尚风向标，并在行业内屡获殊荣，受到了全世界消费者接受和喜爱。斯凯奇在世界各地开设独立专卖店、百货商店、品牌专柜等店铺形式，拥有超过3,000家零售店和品牌官网www.skechers.com。
Skechers USA, Inc., based in Manhattan Beach, California, designs, develops and markets a diverse range of lifestyle footwear, as well as performance footwear. The Company manages its international business through a network of global distributors, joint venture partners in Asia and the Middle East, and wholly-owned subsidiaries in Canada, Japan, throughout Europe and Latin America.

三起商行株式会社

6.1B5-03

Address: 日本 Japan 76 ー 2- 1丁目-大阪府八尾市若林町
Tel: 021-6275-4221
Email: bao.dandan@mail.mikihouse.co.jp
Web: www.mikihouse.com/index.aspx

MIKI HOUSE的围绕“对孩子的关爱”，自从创业以来，秉持着“给孩子和家庭的每一天带来欢声笑语 ”的精神进行孩童服饰设计生产。并且坚持着同样的原则将事业扩展到出版业、教育育儿等相关领域。此外，为了将爱传播给全世界的孩子和父母，MIKI HOUSE也把事业版图扩展到全球。

Artsana S.p.A.

6.1B5-04

Address: 意大利 Italy Via Saldarini Catelli, 1-22070 Grandate (CO)
Tel: +39 031 382 064
Email: Steve.Colombo@artsana.com
Web: chicco.com

Artsana Group - a company leader in Baby Care industry through brands Chicco, Recaro, Boppy, Prenatal…… employs 8,500 people, operates 21 subsidiaries, has partnership with 120 distributors worldwide.
In 2017, Artsana achieved a consolidated turnover of €1,600million through wholesale sales in 150 countries and 1,100 retail-stores.
Artsana presents in China with a R&D Center and a subsidiary.

SINOSKY LIMITED

6.1B5-07

Address: 香港地区 HongKong China UNIT 903 9/F HARBOUR CRYSTAL CENTRE 100 GRANVILLE ROAD, TSIM SHA TSUI,KL
Tel: 0571-89919508
Email: joeyho@sinoskycorp.com
Web:

公司1998年成立于香港，已有二十余年历史，公司拥有现代化的办公大楼、国际验证的生产基地和国际化的员工队伍。
2010年成立进口中心，专注于奢侈品批发零售与品牌管理。

Nitoms.Inc

6.1B6-02

Address: 日本 Japan Tokyo-7F,Shinagawa-Seaside Park Tower,4-12-4,Higashishinagawa Shinagawa-ku
Tel: 021 5208 1777*2005
Email: xun.he@nitto.com
Web:

株式会社NITOMS是在全球范围内广泛开展事业的综合材料制造商日东电工株式会社(Nitto)旗下的消费材事业子公司，在各种领域以粘着技术为核心开展业务。
从清洁粘滚"COLOCOLO®"这类生活用品起，到不伤肌肤的医用胶带"優肌絆®"这类卫生用品、材料，NITOMS拥有广泛的产品线。
目前通过日东集团旗下在中国最大的综合销售型公司：日东(中国)新材料有限公司开展销售业务。
NITOMS is a subsidiary company of Nitto, a comprehensive material manufacturer, which has a wide range of undertakings worldwide. It carries out the business with adhesive technique as its core. From adhesive cleaner COLOCOLO®, NITOMS has a wide range of product. Through Nitto Group's largest comprehensive sales company in China: Nitto (China) New Materials Co., Ltd. to carry out the business.

德绒有限公司 / Dralon GmbH 德绒有限公司

6.1B5-05

Address: 德国 Germany Dormagen-Alte Heerstraße 2, Chempark Gebäude B900 Dormagen
Tel: 021-3988 3297
Email: e.sandrieser@brightfield-sh.com
Web: www.dralon.com/cn/kontakt

Dralon(德绒)有限公司的德国生产基地位于Dormagen和Lingen，是全球公认的腈纶知名生产商。尽管竞争日益激烈，但dralon®(德绒)凭借其创新能力、对产品不断的优化、高品质和可靠的服务与供货成为腈纶纤维行业的市场领先者。我们德国工厂的生产能力为每年188,000吨，产品范围覆盖了整个干纺和湿纺领域。
Dralon GmbH with its German locations Dormagen and Lingen is renowned worldwide as a recognized manufacturer of acrylic fibers. Innovation, consistent product optimization and reliability in service and supply have made dralon® the market leader in acrylic fibers despite the increasing competition. A total capacity of 188,000 tons p.a. in our German plants.

GALLERY AM Co., Ltd. (株)画廊AM

6.1B5-08

Address: 韩国 ROK(Republic of Korea) Seoul-Seoul-161, Dosan-daero, Gangnam-gu
Tel: 15618322372
Email: onlinemd1_cn@galleryam.com
Web: youk.co.kr/?napm=ct%3djg631ms9%7cci%3dcheckout%7ctr%3dds%7ctrx%3d%7chk%3d5dcb563c6f43e5d8e4fd

陆心媛品牌以陆心媛画家的画作为背景，推出了各种各样的产品包括从生活家居用品到时尚商品。陆心媛品牌不仅是一个产品，而在于它向大众传播的文化理念提出'女人因为是女人而幸福' "All women should be happy"的品牌口号，鼓励人们追求积极自由向上的幸福生活，在国内外都吸引很多人的欢迎的最佳艺术家品牌。
Youk Shim Won's brand takes Youk Shim Won's paintings as its background. Youk Shim Won brand is not only a product, but also the best artist brand which is popular at home and abroad by putting forward the slogan "All women should be happy because they are women" to the mass cultural concept, encouraging people to pursue a positive, free and upward happy life.

Bangladesh Jute Mills Corporation

6.1B5-06

Address: 孟加拉国 Bangladesh Dhaka-Dhaka-Adamjee Court, Motijheel C/A
Tel: +88-02-9565517
Email: majid3171965@gmail.com
Web: www.bjmc.gov.bd

Bangladesh Jute Mills Corporation (BJMC) was established under Article 10 of Bangladesh Industrial Enterprises (Nationalization) Order 1972 (PO 27 of 1972) with the aim and objective of controlling, supervising and coordinating the activities of jute mills nationalized and placed under it.

Orkla欧克拉

6.1B6-01

Address: 挪威 Norway Oslo-0277 Oslo-Drammensveien 149
Tel: +86 13621681750
Email: chloe.zhao@orkla.com
Web: www.orkla.com

北欧最大的快消品集团，创于1654年。Orkla早期主营开采黄铁矿业务。经过几百年的发展，Orkla逐步发展为一家实业控股公司，并在现代挪威发展中起到了举足轻重的作用。在过去的几十年，Orkla成功从工业型集团企业转型为北欧最大的快消品集团。业务分为Orkla食品，Orkla甜品零食，Orkla健康，Orkla食品原材料和Orkla投资五个板块。旗下口腔护理品牌Jordan，鳕鱼肝油品牌Mollers，果酱品牌DGF，零食品牌OLW等都销往全世界。
Orkla is a leading supplier of branded consumer goods to the grocery, out-of home, specialised retail, pharmacy and bakery sectors. The Nordic and Baltic regions and selected countries in Central Europe are Orkla's main markets. The Orkla Group also holds strong positions in selected product categories in India. Orkla Group owns many worldwide famous brands, such as Jordan, Mollers, etc.

FRII OF NORWAY AS

6.1B6-03

Address: 挪威 Norway 4638 KRISTIANSAND-Korsvikgrenda 15
Tel: 4740400986 / 0592-5379668-618
Email: mini.huang@compucase.com.cn
Web:

Frii of Norway AS是挪威的儿童品牌，面向中高端用户，产品品类涵盖儿童书包、儿童玩具和婴幼儿用品。公司致力于高品质、设计感和功能性为一体的产品研发设计，为婴幼儿和儿童的健康成长带去极致呵护。
Frii of Norway AS comes from Norway, A brand aims at high-and-mid-end consumers . Products cover children's schoolbags, children's toys and infantile articles All products are designed and developed with emphasis on high quality, design and functionality.

KIT&KIN Ltd.

6.1B6-04

Address: 英国 United Kingdom 22 Wycombe End,Beaconsfield,Bucks.HP91NB UNITED KINGDOM
Tel: 123456789
Email: Christopher@kitandkin.com
Web:

Fond of GmbH

6.1B6-07(01)

Address: 德国 Germany 50823 Cologne, Germany
Tel: 021-64852262
Email: lily.zhang@fondofdistribution.cn
Web:

李大桥中德商贸 / CHINA MARKET EXPERTISE

6.1B6-07(02)

Address: 德国 Germany Deutschland (DEU)-helsa-Ringenkuhler Straße 26
Tel: 004956049180277 / 056049180277
Email: xiangzhenli1972@gmail.com office@china-market-expertise.de
Web: www.china-market-expertise.de

CHINA MARKET EXPERTISE is reliable and professional consulting company. We support bringing innovative products to the Chinese markets and help German health care institutions recruiting qualified human resources on Asian-Pacific area. We widen our services constantly in Asian and Europe and we dedicate ourselves to meet and exceed our customers' expectations.

瑞士科兰曼 / Le Glamour Suisse Sarl

6.1B6-08(01)

Address: 瑞士 Switzerland Vaud-Lausanne-Avenue Mon Repos 24
Tel: +41788057137 / +41799566501
Email: info@leglamour.ch
Web: www.leglamour.ch

瑞士科兰曼提供瑞士最新生物科技的抗衰老护肤产品。
Le Glamour Suisse respects the Swiss craftsmen spirit and the pursuit of perfection. Following the Swiss Cosmetic GMP aiming for provide latest and best anti-ageing skin-care solution.

Aulida Group Pty LTD

6.1B6-05

Address: 澳大利亚 Australia NSW 2116-Rydalmere-Unit 2/1,Antoine Street
Tel: 18938937326
Email: 610952326@qq.com
Web:

澳丽达集团在澳洲悉尼拥有自己的种植庄园—悉尼星月湾，保证了产品的天然本质；拥有澳洲卫生部所属—TGA最高认证标准的工厂和专业化妆品研究机构，能自主研发生产孕婴洗护产品、食品、保健品，并从源头上确保产品的品质。
Aulida Group have our own plantation in Sydney, Australia -- Star Bay, here we cultivate many of the natural ingredients we use in our skin care products. We also have our own GMPc approved manufacturing facillity in Sydney capable of manufacturing cosmetics, baby wash products, and supplements and health foods for kids and the whole family with formulas developed by leading international profes.

EasyMotionSkin

6.1B6-07(03)

Address: 德国 Germany 04277 Leipzig-Windscheidstr 21-23
Tel: +493413033300
Email: j.ising@easymotionskin.com
Web: www.easymotionskin.com

The EasyMotionSkin group is providing the next generation of innovative fitness and health technology based on german engineering and scientific development. Our new development of EMS technology is established in professional sports, fitness, rehabilitation for all man kind.

Aymara Switzerland (MJ Steps GmbH) / TRISTON Switzerland (MJ Steps GmbH)

6.1B6-08(02)

Address: 瑞士 Switzerland Volketswil-8604-Austrasse 15
Tel: +41 783018484
Email: michael@mjsteps.com
Web: www.mjsteps.com

We are specialized in Premium Brands

Dragon Du Ciel SA

6.1B6-08(03)

Address: 瑞士 Geneva-Geneva-Z Rue Argand 1201 Switzerland Geneva-Geneva-2 Rue Argand 1201
Tel: 0086 10 56428530
Email: beijing@dragonducielsa.com
Web: www.dragonducielsa.com

法国科延公司 / LABORATOIRES EXPANSCIENCE

6.1B6-06

Address: 法国 巴黎-巴黎-1 PLACE DES SAISONS 92048 PARIS LA DÉFENSE France ILS DE FRANCE-PARIS-1 PLACE DES SAISONS 92048 PARIS LA DÉFENSE
Tel: 021-61850712
Email: jyang@expanscience.com
Web: www.expanscience.com

LABORATIRES EXPANSCIENCE – a French independently-owned pharmaceutical and dermo-cosmetics laboratory – over more than 60 years, the company has built up a solid international reputation as an innovator and as a specialist in skin and the treatment of osteoarthritis. Its products, which include two leading brands – Piasclédine 300 and Mustela – are sold in more than 100 countries.

SAICOS COLOUR GmbH

6.1B6-07(04)

Address: 德国 Germany Sassenberg-Carl-Zeiss-Str. 3 · D-48336
Tel: 020-31077205
Email: Gloria.pan@foxmail.com
Web: www.saicos.de

简介
专业木材处理—赛克斯天然环保
SAICOS COLOUR GMBH 赛克斯2002年成立于德国萨森博格,位于德国西部威斯特伐利亚的中心。赛克斯的一个年轻的公司是一个国际知名的企业，这个年轻的公司是由一群经验丰富的专家创立的，他们在木材和木制品行业备受推崇。
传统价值、创新和敏捷灵活是我们公司成功并快速扩张的基石。
我们的客户群包括木制品生产企业、木材批发商和木器涂料厂、木材加工和贸易公司。
Professional wood treatment – naturally with SAICOS.
SAICOS COLOUR GmbH was founded in 2002 in the heart of Westphalia, at Sassenberg in Germany.

KINETIKSPORT GmbH

6.1B6-08(04)

Address: 瑞士 Switzerland Zurich-Zurich-c/o TREUFIN Reuter AG, Nuschelerstrasse 31, 8001
Tel: 13917338292
Email: info@kinetikcompression
Web: www.kinetiksports.com

KINETIK是一个专注于为多种运动提供高科技与高品质解决方案的创新型瑞士品牌，产品全部来自自营工厂手工制作，这种独立生产的模式允许我们可以持续不断的为满足最终用户的需求提供解决方案。我们实际上就是用户的实验室，产品都经过最严苛的环境测试(如400公里的越野跑，夏威夷大铁，环法自行车以及综合格斗比赛等)技以及品质。
KINETIK Compression Gear is an innovated Swiss brand concentrate on the Solutions of Technology and Quality for Multisport. Everything in KINETIK is handmade indoor. This independence allow us to evolve the range to give the solutions from the user requirement. You Probably have been noted the design and technology are the key point of our work all in a constant concern for flawless quality.

Recticel Bedding (Schweiz) AG

6.1B6-08(06)

Address: 瑞士 Switzerland Luzern-Büron-Bettenweg 12•6233
Tel: +86 010 87770697
Email: sepp_euhome@sina.com
Web: www.swissflex.com

瑞克赛尔集团是全球领先的欧洲寝具集团，旗下拥有多个国际寝具品牌。如：swissflex（国际市场），Superba(主要市场：瑞士，德国，澳大利亚，法国）。Swissflex和Superbar品牌，通过多样化高端睡眠系统，以满足客户对高品质的要求。
Recticel group, the world's leading European bedding group, which owns a number of strong brands, such as: Swissflex (for) the international market, Superba (main market, Switzerland, Germany, Austria, France).Swissflex and Superba brands, with their wide variety of premium products, offer customized sleep systems to meet customers' most demanding requirements.

Pinzi import and export trading co., LTD

6.1B6-09(01)

Address: 澳门地区 Macao China 澳门市
Tel: +86 13761292005
Email: info@azaleaho.com
Web:

Since 2012, pin zi import and export trading co., ltd. has not only created two major fashion women's brands such as AzaleaHo and Misazal, but also provided ODM services for many women's wear brands in mainland China. It is a comprehensive company integrating design, production, sales and service.

好時節文創有限公司 / HAOSHIJIE CREATIVE CULTURE (MACAO) LIMITED

6.1B6-09(02)

Address: 澳门地区 關前正街44號地下 Macao 44 R. dos Ervanarios, Macau
Tel: 13923174123 / +853 66294669
Email: haoshijie.mo@gmail.com
Web:

好時節文創有限公司是澳門首個中式美學文化品牌，其實體店好時節雅舍位於澳門關前正街四十四號，致力推廣中華文化生活化、年輕化、是售賣獨家設計的中式時裝、澳門藝術家設計周邊產品的文創店兼茶館。
Teahouse and a fashion brand based in Macau.

晷匠時尚設計有限公司 / TIME MAKER DESIGN LTD.

6.1B6-09(04)

Address: 澳门地区 MACAU-MACAU-澳門美副將大馬路50號新美工業大廈11樓b座 Macao MACAU-MACAU-Av.do Conronel Mesquita, No50, Edif. Ind. San Mei, 11B. Macau
Tel: +853-28757511
Email: workerplayground@163.com
Web:

晷匠時尚设计有限公司主营：手表，精品饰物及服装设计。
旗下品牌Worker Playground是一个澳门潮流品牌，创立于2012年，是主打澳门街头文化服饰。以澳门的历史文化为主题，以流行角度演绎本地故事。服装风格以变奏的经典男装款式作为设计主线，添上隐藏式的澳门的元素，如澳门航空历史、摇滚音乐节、回力球、曲棍球及格兰披治大赛车等。
透过服装展现本地文化，务求生产本地化的经典服装款式。
TIME MAKER DESIGN LTD. is a design company which distributes its own fashion brand -Worker Playground, a fashion label that reflects the street culture of Macao. The label focuses on menswear, using variations of classic style as theme, adding Macao elements such as Macao aviation history, Macao Grand Prix in the design of the clothes.

CLÁSSICO MODERNO

6.1B6-09(05)

Address: 澳门地区 Macao China 俾利喇街45-45C號聯興針織廠3樓G室
Tel: (853)68298368
Email: vi6tor.lao@gmail.com
Web: www.classicomoderno.co

CLÁSSICO MODERNO由澳門時裝設計師劉嘉榮於2016年創立，以經典的摩登時尚理念為基礎，設計上注重藝術與文化相結合，充分運用色與形的自然交融，為產品注入靈魂，表現出品牌的獨特魅力及具有前瞻性的藝術視野。品牌主營男士西裝及其周邊配套產品，不斷從經典中創新，混合簡約經典及摩登奢華兩種不同的設計風格，以時尚的設計和精緻的剪裁見稱，另有高級私人訂製服務。

墨泉時尚有限公司 / I.N.K FASHION COMPANY LTD.

6.1B6-09(07)

Address: 澳门地区 Macao China 俾利喇街45-45C號聯興針織廠3樓G室
Tel: 66432272
Email: info@inkystore.co
Web:

Taking its name from literal ink and the creative process, I.N.K is also an abbreviation of the names of operations director Leong and creative director Chan. The new brand caters to aesthetes who want to set the trends instead of follow them, encouraging "thinking in fashion" with new technology, clothing material and 3D draping techniques.

添美项目顾问有限公司

6.1B6-09(08)

Address: 澳门地区 Macao China 澳門-沙梨头海边大马路21号骏悦轩地下J铺
Tel: +853 65992110
Email: 1914558328@qq.com
Web: www.chavinoffcial.com

原質東隅設計行 / Hylé Design

6.1B6-09(09)

Address: 澳门地区 Macao China-澳門黑沙環製造廠巷5號澳門設計中心3樓03室 Macao Macao-Studio 03. 3F, Macau Design Centre, Travessa da Fabrica N0. 5
Tel: +8615338152711
Email: info@hyle.design
Web: hyle.design

原質東隅(Hylé design)是澳門一個人文生活設計品牌。主張追求事物的純粹本質，熱愛發現生活中的美學及其細節,期望在繁忙都市的使用者經驗中，呈現那份簡潔純樸的溫暖，提升生活態度。
Hylé design is a brand inspired by cultural life in pursuit of pure essence of things. We' re eager to discover the aesthetics and every little details around us. By sharing this particular warm-hearted feeling we expect to bring the customers a different experience of quality life.

Binger (HK) Limited

6.1B6-10

Address: 香港地区 HongKong China Hong Kong-Room 3, 10F, Block A Tonic Industrial Centre, 26 Kai Cheung Road, kowloon, Bay
Tel: 021-52990961
Email: george@siertrading.com
Web:

滨阁（香港）有限公司以国际顶尖设计师团队、优秀的真丝面料与精湛先进的生产工艺打造成为高端丝绸配饰品牌，其核心产品涵盖女式丝巾、围巾、披肩、旗袍，男士领带、领结、口袋巾等配饰。
Binger (HK) has become a upmarket silk accessories brand with the international top designer team, excellent silk fabrics and exquisite advanced production technology. The core products of binger include women's scarves, scarves, shawls, cheongsams, men's ties, ties, pocket scarves and other accessories.

ZOE WIN VENTURES

6.1B6-11

Address: 加纳 Ghana 138 cummins avenue, Accra, Ghana
Tel: 778340517
Email: 412442522@qq.com
Web:

ZOE WIN VENTURES投资有限公司注册地址加纳。是一家专业投资农业、文化和国际物流，以及生产非洲家居工艺及日用品的公司。主要经营及生产木质手工艺品、家居饰品、角制品等，随着中国一带一路的倡导，本公司2015年在便进入中国，公司致力于促进国际双边贸易的投资，向全世界展示非洲产品。
ZOE WIN VENTURES limited registered address in Ghana. Is a professional investment in agriculture, culture and international logistics, as well as the production of African household technology and daily necessities company. Mainly engaged in and producing wood handicrafts, household ornaments, horn products, etc., with the advocacy of One Belt And One Road in China, the company entered China in 2.

Jasmin Skincare Pty Ltd

6.1B6-12

Address: 澳大利亚 Australia QLD-North Mt Tamborine-197 Long Road
Tel: 07 5545 2006
Email: lsong@jasminskincare.com
Web: www.jasminorganics.com

考拉宝宝（KoalaBaby）有机农场地处南半球的檀柏丽山，距离黄金海岸15公里，是澳大利亚政府重点保护的天然热带雨林及旅游圣地，种植园里有来自全球精选的有机植物品种，茉莉、玫瑰、栀子、鳄梨、山茶花、熏衣草，昆士兰坚果及其它许多珍贵的花，水果和草本植物，甚至养殖了蜜蜂，帮助花果和植物授粉，同时提供了最优质的蜂蜜和蜂蜡，为考拉宝宝（KoalaBaby）产品提供最优质的天然有机植物原料。
Koala Baby Organics is above all a celebration of the joy of motherhood, and of the mother's desire to give her child the safest and healthiest care available. We rejoice in the happiness of the intimate bond between mother and child, and we work to strengthen it through our luxurious organic products.

澳大利亚商业有限公司 / Product of Australia Trade Pty Ltd

6.1B6-13

Address: 澳大利亚 Australia Victoria-FAIRFIELD-44 Sparks Avenue
Tel: 13816712400 / +613 86836898
Email: 2322861785@qq.com alpaca@hotmail.com.au
Web:

INJOI 寓意为“品质生活、享受快乐”，源于澳大利亚，是一家高端羊驼饰品家居制造商。
INJOI的产品以羊驼皮毛卓越的秉性为设计灵感，保有其天然特性，大多数产品采用传统手工制作，以使我们的客人感受到与众不同的触觉体验。
Product of Australia Trade Pty Ltd is a brand compnay and specialzing in the development and professional production of alpaca fur products in Australia.
In currently, we are a leader in the field of Alpaca fur products in Australia. We has established a long-term strategic cooperation with DFS, the duty free shop in around all Australia airport. Also, the INJOI brand offers the customization.

Earth Mama Angel Baby, LLC

6.1B6-14

Address: 美国 United States of America 9866 SE Empire Court，Clackamas，OR 97015
Tel: 021-58155593
Email: benjamin@morningrain.cn
Web: www.morningrain.cn/ earthmamaorganics.com

Earth mama is the famous brand in US makes effective, organic and natural herbal care for the whole journey of motherhood: pregnancy, postpartum, breastfeeding and baby care. Selective of natural organic ingredients, to provide the most trust, natural organic maternal and infant products for the mothers and their babies.

LIHIT LAB., INC.

6.1B6-15

Address: 日本 Japan CHUO-KU,OSAKA 540-8526,JAPAN
Tel: 81-3-5820-3020 / 81-3-5823-6647
Email: li-chunshan@lihit-lab.co.jp
Web: www.lihit-lab.com

株式会社LIHIT LAB.创建于1938年，历史悠久的日本著名的文具厂商。
主要设计、开发和生产，文具和收纳，生活用品。
出口中国，东南亚，澳大利亚，欧美等世界各地。
品牌名“LIHIT LAB.”高品质的产品，提供温馨的服务。
LIHIT LAB., INC., established in 1938, is one of the historical and famous stationery companies in Japan. We have exported stationery and daily commodities to foreign countries such as China, South-east Asia, Australia, the USA, Europe and etc. The brand name "LIHIT LAB.", The Top Quality Products with Heart-warming Service.
Our company is listed with the 2nd section of the Tokyo Stock Exchange.

KING JIM CO., LTD

6.1B6-16

Address: 日本 東京都-千代田区東神田二丁目10番18号 Japan Tokyo-No.10-18, 2-Chome Higashi-Kanda, Chiyoda-ku
Tel: 021-53082770-1018
Email: zyx@kingjim.cn
Web: www.kingjim.co.jp

日本著名的办公文具用品厂商。
Ever since it was founded in 1927, KING JIM Co., Ltd. has developed and sold numerous unique filing products based on the principle "Utilization of Information and Human Resources." The information management products offered by KING JIM are the outcome of uncompromising thinking grounded in the perspective of the people who use the information.

So. Di. Co. Sr

6.1B6-17

Address: 意大利 Italy Ancona-Senigallia-Via Foce Cesano 4 Senigallia Ancona Italy
Tel: 15277774364
Email: 164380911@qq.com
Web: www.sodico.it

公司在2014年推出了自己旗下的42种产品，涵盖了身体护理、个人卫生、儿童专用等产品，该品牌涵盖了面部、眼部、唇部、护肤等四大类200多个SKU，产品最大特性是主要成分为天然有机植物萃取精油，以确保质量和安全。每种有机天然产品都是为了满足化妆品专业人士、母亲或者儿童等寻求最好的身体护理的人的需求而生产，同时So.di.co.致力于环境保护，从选择原材料到产品包装。
In 2014, SO.DI.CO became a leading company in the licensing sector for body care, personal hygiene and children's products. All the children's licensed products are made in Italy at our own factories using carefully selected, premium quality ingredients.

MOULINROTY / MOULIN ROTY

6.1B7-01

Address: 香港地区 HongKong China NORTH POINT-2-8 WASTON ROAD-ROOM 1205-06, BLK B, 12/F, SEA VIEW ESTATE
Tel: 25742831
Email: cammy@moulinroty-hk.com
Web:

茉兰若缇是法国著名高端的婴儿和儿童用品品牌，玩具都是法国专业设计，使用最好的法国面料和材料。
茉兰若缇也是儿童礼品和生活方式中的公认品牌，在46年来她一直在创造充满温馨和想象力的玩具。
Moulin Roty is a famous brand in France for quality baby & children items, toys are all expertly designed in France using the finest French fabrics and materials available.
Moulin Roty is also a recognized brand in children's gift and lifestyle, and segment, has been creating toys, full of gentleness and imagination for little ones for 46 years.

DONG-A PENCIL CO., LTD

6.1B7-02

Address: 韩国 ROK(Republic of Korea) 4F, PARKLAND B/D, 237-11, NONHYUN-DONG, KANGNAM-GU, SEOUL, KOREA
Tel: +82 2 2105 8646
Email: sk_kim@edongapen.com
Web: www.dongapen.com

DONG-A Pencil Co., Ltd. was first established in 1946 as the first stationery product company. We are competing many foreign companies for the high quality. Dong-A Pencil has continuously developed and started to export the pencil since 1963. To multiple Stationery products, we established Dong-A Teaching Materials Co., Ltd. and started to produce to sell Oil Pastels, Water colors and etc.

Joy Sports Co., Ltd.

6.1B7-03

Address: 泰国 Thailand Bangkok Huai Khwang-9/11 Ratchadapisek, Soi 18, Ratchadapisek Rd
Tel: +662 312 1321
Email: jirayut@joysports.co.th
Web: http://feelfreegear.com/

Joy Sports Co. Ltd. is the parent manufacturing company. The Feelfree division was established since 1990s, becoming an internationally renowned Thailand water-sports producer of kayaks, accessories and waterproof bags. Feelfree products are available in more than 50 countries.

英国莫松饰品公司 / Monsoon Accessorize Limited

6.1B7-06

Address: 英国 英格兰-伦敦-尼古拉斯街1号 United Kingdom England- London -1 Nicholas Road, London W11 4AN
Tel: 00852-5134 9651
Email: 3490126627@qq.com
Web: uk.accessorize.com

英国莫松饰品有限公司创始于1973年，当时第一家莫松精品店在伦敦的Beauchamp Place开业。第一季莫松系列采用手工制作的棉织物，有机植物染料和手工印花技术，在印度村庄制作华丽的波西米亚风衣。十年后推出了我们的Accessorize品牌，主打潮流装饰。如今，我们的两个姊妹品牌在全球拥有1,000多家商店，经营的品类涵盖首饰，箱包、家居、鞋子和配件。

Our wonderful story starts back in 1973 when the first Monsoon boutique opened on London's Beauchamp Place. Peter Simon (our founder) had returned from a life-changing road trip around Asia – determined to share the colorful marvels of his experience. And the first Monsoon collections featured gorgeous bohemian clothes made in Indian villages using hand-loomed cotton fabrics.

桑科默 / SANKOM SA

6.1B7-09

Address: 瑞士 Switzerland Jura-Delèmont-SANKOM Export Office Rue de la Molière 2
Tel: +41 32 422 50 00
Email: china@sankom.com
Web: www.sankom.com

瑞士SANKOM创新公司，专业开发功能性服装，改善健康的同时塑造身体。SANKOM在世界范围内受到了100多项专利。SANKOM专利产品获得了全球的认可，并在消费者和专业医学界取得了巨大的成功。SANKOM公司专利的产品已成功销往95多个国家。

SANKOM - Switzerland innovative company, specializing in the development of Functional Wear. SANKOM holds more than 100 patents worldwide. SANKOM Patent products have received global recognition and success among consumers. SANKOM products successfully distributed to over 95 countries.

Hongkong Travel Culture Luggage Co., LTD

6.1B7-04

Address: 香港地区 G/F,NO.107 CHANTHAM ROAD SOUTH, TSIM SHA TSUI, KOWLOON, HONGKONG CHINA
Tel: 13376454163
Email: 1782566389@qq.com
Web:

我们组成了一个由世界旅行者，制造商和设计师组成的全球集体，以创造最好的行李箱。如今，办事处遍布全球 - 总部位于香港的大都市中心，在加拿大温哥华设有创意设计团队，并在日本拥有一支专业的产品设计师团队。我们的跨国视角和对旅程的热爱使我们从第一天开始就与众不同。我们诚挚 希望通过进口博览会，认识更多的合作商，获得更多的贸易合作伙伴，让产品走向全世界。

We have formed a global group of world travelers, manufacturers and designers to create the best suitcases. Today, our offices are located in all over the world - headquartered in the metropolitan centre of Hong Kong, with creative design teams in Vancouver, Canada, and a team of professional product designers in Japan.

Leonis公司 / Leonis Co., Ltd.

6.1B7-07

Address: 日本 大阪府-堺市-大阪府堺市北区百舌鸟陵南町3-56 Japan Osaka-Sakai-3-56, Mozuryonancho, Sakai-Shi Kita-Ku, Osaka-Fu, Japan
Tel: 072-278-5941
Email: k.ogura@leonis.co.jp
Web: www.leonis-sf.com

LEONIS成立于1971年，位于大阪南部的大城市Sakai，出售各种家居用品。多年来，我们已经转型为职业女性衬衫制造商，以及各种时尚配饰和缝纫材料的供应商。

LEONIS was founded in 1971 in Sakai, a large city located just south of Osaka, selling a variety of household goods. Over the years, we have transitioned to a maker of shirts for the working woman as well as provider of a variety of fashion accessories and sewing materials.

孟加拉达达有限公司 / DADA BANGLA LIMITED

6.1B7-10

Address: 孟加拉国 Bangladesh 6th floor, House No-1, Road No-27/A, Rupnagar Commercial Area, Mirpur, Dhaka-1216
Tel: 13611662570
Email: davidwjshi@126.com
Web:

Dada Bangla Limited 是一家专注于孟加拉手工产品的设计、加工和推广的公司。公司产品的理念是绿色环保和现代时尚相结合。产品的原材料完全采用天然材料，特别是孟加拉特产黄麻。制作过程由手工艺人手工完成，品质细腻，做工精致。产品设计既带有浓郁的民族特色，又富含时尚气息。2018年正式引入中国，并通过互联网等方式推广。

Dada Bangla Limited was eastablished in 2017. We offer you various kind of Jute Diversified products like Jute & cotton tote Bags, Beach Bags, Wine Bottle Bags, Natural color Bags, Fashion Bags,Table Mat, Floor Matt, Gift Bags, Souvenir Bags & any other hand made products by Jute. Our all products are famed for being 100% eco-friendly.

FRANCE FAERSIDAN INTERNATIONAL GROUP LIMITED

6.1B7-05

Address: 香港地区 HongKong China Flat/RM 1402A 14/F The Belgian Bank Building Nos.721-725 Nathan Road HongKong
Tel: 13599537255
Email: 13599537255@qq.com
Web:

GEE EMM SONS

6.1B7-08

Address: 印度 India RATHPORA NEAR SHAHEED MILAT MASJID SAFAKADAL SRINAGAR
Tel: 13590345099
Email: 61513663@qq.com
Web:

GEE EMM SONS is based in India,specialized in Kashmir handicrafts.Mainly engaed in Kashmir handicrafts,cashmere embroidered scarf shawl,hand-made silk blanket and hand-made tapestry wood carving handicraft.

NANNINI ITALIAN QUALITY S.R.L.

6.1B7-11

Address: 意大利 Italy 42124 Reggio Emilia (RE) -Via J.F.Kennedy, 10
Tel: 075526524309
Email: 528452821@qq.com
545521967@qq.com
Web: www.nannini.com

A STORY OF ITALIAN ACCOMPLISHMENT, DEVOTION AND DEDICATION It prompted the automotive and motorcycle aficionado Giorgio Nannini to create in his laboratory specialized and innovative eyewear for driving both antique and modern cars.Vassoio The idea came about from passion and a need that he shrewdly perceived and resulted in the first Nannini eyewear.

LLC MGMTEX

6.1B7-12(01)

Address: 格鲁吉亚 Georgia Kutaisi-Z. Gamsakhurdia Ave. 47
Tel: +995596320002
Email: elizbar@mgmtex.com
Web: www.mgmtex.com

MGMtex is one of the leading garments manufacturers in Georgia. We are working for world's leading brands.

Gepherrini

6.1B7-12（02）

Address: 格鲁吉亚 Georgia Tbilisi-1 Mekanizatsia str
Tel: +9950322042000
Email: info@gepherrini.ge
Web: www.gepherrini.ge

Company "Gepherrini" was founded on August 7, 2014 in Georgia (country). we produce bags, accessories, shoes, belts and wallets. Designers' team, consisting of 5 members, has an individual and unique style. Gepherrini is represented by 43 selling points around the world.

SALLE DE MODE

6.1B7-12（05

Address: 格鲁吉亚 Georgia Tbilisi-Abashidze N64
Tel: +995322238382
Email: info@salledemode.com
Web: www.salledemode.com

SALLE DE MODE produce womanwear shoes, clothes, bags and accesories.

MODIANO S.p.A. Industrie carte da gioco e affini

6.1B7-13（01）

Address: 意大利 Italy Trieste-San Dorligo della Valle-Via Travnik, 21
Tel: +39 040 3893111
Email: carte@modiano.it
Web: www.modiano.it

Since 1868 Modiano is a reference brand in the world of playing cards in Italy and worldwide. The historic Italian company is a playing cards and tarots manufacturer. Over 150 years of experience in the world of paper processing make Modiano an authoritative partner as well as an excellence of Made in Italy. Modiano plant works in compliance with the highest environmental standards and holds FSC.

Mirato S.p.a.

6.1B7-13（02）

Address: 意大利 Italy Novara-Landiona-Strada Provinciale Est Sesia
Tel: 00390321827711
Email: roberta.petterino@mirato.it
Web: www.mirato.it
www.milmil.com
www.geomarbeauty.com
www.iprovenzali.it

Mirato S.p.a. was founded in the ’60 and today is one of the main protagonist in the Italian market and in more than 150 countries in the personal hygiene and cosmetic market. The brands are targeted at the mass-market. For the personal hygiene: Malizia, Intesa, MilMil, Breeze, Glicemille, Nidra; for oral care Benefit, Perlax; for cosmetics Clinians, Geomar; for natural products I Provenzali.

Mercury Living Srl

6.1B7-13（03）

Address: 意大利 Italy lombardia-Milano-Via Copernico
Tel: +39 3478930954
Email: info@mercuryliving.it
Web: www.mercuryliving.it

Key word: supply chain network for outdoor - Online Sales - One Stop Business Access - Outsmart Product Solution N+1: Supply Chain Network with small corporate partners and local customer service in Europe Research & Development Inhouse Material: From nature to us Own professional manufacturer support New shapes: K.D. Pennies Saved Modular K.D. design is ship-friendly cost controller

GRUPPO DESA

6.1B7-13（04）

Address: 意大利 MB - 20831-Seregno-Via Monte Santo, 37 - Seregno (MB) - 20831 - Italia Italy MB - 20831-Seregno-Via Monte Santo, 37
Tel: +390362266208
Email: Arianna.Sanvito@gruppodesa.com
info@rs-realsilva.com
Web: www.chanteclair.com

Chanteclair is a historic brand of Marseilles soap, established at the beginning of the 20th century. In 1996 Realchimica achieved the takeover of Chanteclair and started a development process, which made Chanteclair become one of the most important players in Italy. Chanteclair is now available in 26 countries, including China, famously known as 大公鸡管家.

ANACLETO MARIANI SRL

6.1B7-13（05）

Address: 意大利 Italy MONZA E BRIANZA-LISSONE-VIA TRIPOLI 24
Tel: +39 039 461213 / +39 039 461213
Email: wow@anacletomariani.it
Web: www.anacletomariani.it

Our Company is a DESIGN OFFICE, INTERIOR CONTRACTING and FACTORY specialized in decoration and furnishings of hotels, restaurants, residential villas, offices and commercial complexes on a turn-key bases.

M&D GROUP SRL - XANE

6.1B7-14（02）

Address: 意大利 Italy TARANTO-MARTINA FRANCA-VIA SERRAMANCONE, 13
Tel: 080 4805343
Email: bruno.maggi@mditalygroup.it
Web: www.mditalygroup.it

A SINGLE POINT OF CONTACT FOR CUSTOMIZED DESIGN SOLUTIONS: We are specialized in the creation of design solutions, in the areas dedicated to swimming pools, wellness and home automation.THE WELLNESS CENTER … A REALITY IN THE RESIDENTIAL AND HOSPITALITY SECTORS: We offer customized projects based on the space available and customer needs.

Natuzzi SpA

6.1B7-14（03）

Address: 意大利 Italy Bari-Santeramo in Colle -Via Iazzitiello, 47
Tel: +8613764344060
Email: apiccinno@natuzzi.com
Web: www.natuzzi.com

Founded in 1959 by Pasquale Natuzzi, Natuzzi S.p.A. is Italy’s largest furniture house and one of the most important global players in the furniture industry with an extensive manufacturing footprint and a global retail network. Natuzzi is the European lifestyle best-known brand in the upholstered furnishings sector worldwide (Ipsos 2018).

PDT COSMETICI / PDT COSMETICI srl

6.1B7-14（05）

Address: 意大利 Italy Bari-Putignano (BA)-Cavalieri del Lavoro Street, 45-47
Tel: 0039.0804931509
Email: l.giliberti@pdtcosmetici.it
Web: www.pdtcosmetici.it

PDT Cosmetici, located in Bari, Italy, since 1996 has formulated and produced face/body care cosmetics activated with natural ingredients. We cover all phases of production cycle: formulation, R&D, production, packaging. We have two divisions: one producing cosmetics in Private Label and another in charge to sell and distribute our own brands. We are certified ISO 9001:2015 and ISO: 22716 by SGS.

T&T TARDIA TEXTILE PROJECT SRL

6.1B7-14（07）

Address: 意大利 Italy TA-MARTINA FRANCA-VIA CHIANCARO SN
Tel: +39 080 480 4211
Email: tardia@tardia.it
Web: www.tardia.it

It was in the 2002 that T&T Tardia company grow out of professionalism and years of gained experience of Mr Antonio Tardia. The new company is the arrival point of a business path around coat that found in Martina Franca one of the most qualified manufacturing pole in Italy. Company is located in around 5000sqm, produce and commercialize articles of clothing for men and women: coats,jackets,suits.

CARBOTTI

6.1B7-14(14)

Address: 意大利 Italy Taranto-Martina Franca-Via P. Del Tocco, 31
Tel: 0804858075
Email: carbottiitalia@gmail.com
Web: www.carbotti.it

BIO BOTANICALS SRL

6.1B7-14（14）

Address: 意大利 Italy BRINDISI-VILLA CASTELLI-C.DA CARNEVALE, SNC
Tel: 0995610236
Email: info@energiadellepiante.it
Web: energiadellepiante.it

L'energia delle Piante is a company which operates in the field of HERBAL, NUTRACEUTICAL AND COSMETIC products, founded in 1990 by Dr. Pietro Rossi and his wife Mimma Calzolaio. The specific skills of collaborators such as herbalists, biologists, medicinal chemists and constant collaboration with university allow him to always be a cutting-edge center

Calceviva Snc

6.1B7-14（16）

Address: 意大利 Italy Taranto-Martina Franca -Via Lorenzo D'Arcangelo 3/O
Tel: 0804855256
Email: daniele.del.genio@calceviva.com
Web: www.calceviva.com

CALCEVIVA COMPANY IS A FASHION CONSULTING COMPANY, CREATING PRODUCTS AND OFFERING HIGH ADDED VALUE SERVICES FOR FASHION, FROM DESIGN PLANNING (analysis and research of images for the collection; sampling of raw material and accessories; definition of the colours chart) to MODELLING AND PROTOTYPING (design of the technical sketches; pattern making; prototyping; size grading; fabric placement).

GRUPPO SVILUPPO TESSILE SRL

6.1B7-14（17）

Address: 意大利 Italy TA-SAVA-VIA XI FEBBRAIO 37B
Tel: +390999721844
Email: commerciale@havanaeco.it
Web: www.havanaeco.it www.angelotoma.it

The company headquarters are located in Sava, in the province of Taranto. Here take place the production process and sales, logistics and customer-service management, besides style and product department. the company produces: HAVANA&CO, ANGELOTOMA and JULIANKEEN

Nanairoya co., ltd

6.1B8-01

Address: 日本 大阪府-豊中市-玉井町2丁目1-25 サンヒルズ豊中301号 Japan Ōsaka-fu-Toyonaka-Yujingding 2 Dingmu 1-25 Sun building Toyonaka 301
Tel: 021-63816388
Email: linbin.z@libertysh.cn
Web:

引导潮流，提供线索的日系文具，礼品，杂物的供应商。
A leading supplier of Japanese stationery, gifts and sundries.

ClickpressGroup(Space18)

6.1B8-02

Address: 澳大利亚 NSW-Camperdown-18/1 Hordern place Australia NSW-Camperdown-18/1 Hordern place
Tel: 15618693272
Email: harry@clickpress.com.cn
Web: www.space18.com.au

Space18，来自澳洲的时尚生活品牌。我们始终坚信：少即是多，简约也可以很精致。我们满怀对自然和生命的热爱与尊重，凸出美与环保，讲究试用与价值，提倡个信与品格。致力于时尚与环保的结合，并体现在每一个环节中，最大可能的还原人们对生活中美的捕捉,回归自然，回归初心，回归到人生起航的那一点，从身边万物获取灵感，凭借出色的国际设计师团队,Space18已经准备好实现这个梦想，让世界变得更美好。

Signature s.r.l.

6.1B8-03

Address: 意大利 Italy ER-Ravenna-Via Paolo Frisi, 6
Tel: +393357156368
Email: at@pininfarinasegno.it
Web: www.pininfarinasegno.it

Pininfarina Segno is a new project born of a vision, unique in its genre, to create new, fresh experiences and perspectives in writing in terms of design, technology, materials and applications. Pininfarina Segno is a new concept that values the very best of Italian style and international design by gathering together in its Hub of Excellence.

葆露丝(亚洲)有限公司 / Bonluxe (Asia) Ltd.

6.1B8-04

Address: 香港地区 九龙-红磡-民乐街23号骏升中心17楼B座 Hong Kong China Kowloon-Hunghom-Unit B, 17/F, Gemstar Tower, 23 Man Lok Street
Tel: (852)2892 7735
Email: tina@bonluxe.hk
Web: www.bonluxe.net.cn

BONLUXE葆露丝是全国唯一日本进口功能内衣品牌，是唯一纯日本设计、日本最新技术研发、日本生产的功能内衣品牌。
1997年BONLUXE葆露丝将功能内衣引进香港，令功能内衣在 20 多年内销量不断提升，并成为全亚洲扩张最快的女性功能内衣零售商，同时奠定了市场上的领导地位。现在于香港有8家专门店，于广州有2家专门店，深圳有1家专门店。
Bonluxe has had over a 40-year history in Japan. Bonluxe was founded in Hong Kong in 1997 and now has 8 specialty shops in Hong Kong and 3 specialty shops in Guangzhou and Shenzhen.
In order to be the leading ladies shape-up undergarment retailer in the Asia Region, Bonluxe has to honorably serve the needs of women by providing innovative products and professional services at fair prices.

NAMUNA LLC

6.1B8-09

Address: 乌兹别克斯坦 Uzbekistan Andijan-Sariquy 89
Tel: +998901280880
Email: rustam@namuna.art
Web: namuna.art

Garment production

澳门屿思有限公司 / MACAO UESOME LIMITED

6.1B8-12

Address: 澳门地区 Macau-Shalitou Craftsman Lane Street-澳门沙梨头挣匠巷街10-10A Macao Macau-Shalitou Craftsman Lane Street-10-10A Shalitou Craftsman Lane Street, Macau
Tel: 18664814571 / +86 18664814571
Email: Matthew.he@Uesome.com
Web: www.uesome.com www.mcbip.com

服装设计、制作、生产、销售、批发、代理

一般財団法人 カケンテストセンター / KAKEN TEST CENTER General Incorporated Foundation. (abbreviation: KAKEN)

6.1B8-07

Address: 日本 Tokyo-東京都中央区日本橋室町4丁目1番22号 Japan Tokyo-4-1-22, Muromachi, Nihonbashi, Chuo-ku, Tokyo 103-0022
Tel: 0081-3-3241-7309
Email: zhenyu-zhao@kaken.or.jp
Web: www.kaken.or.jp

A consistent improvement as a third-party testing organization representing Japan.
Now, focusing on examination business, such as domestic distribution or an import, it is continuing the steady pace aiming at the third-party testing body of an international level and more global.

Silk AM

6.1B8-10

Address: 埃及 Egypt Egypt-Cairo-Gharbiya Governorate, Mahalla al- Kubra - Ring roadMahalla al-Kubra Egypt
Tel: 01226663550
Email: cctvonline_5@yahoo.com
Web: www.silkam.net

The Trans Silk A.M company of the first companies and the largest in the field of modern decorative materials. Silk A.M company was founded in 2014 and from that date always keen to satisfy all the desires of customers in terms of price, quality. In terms of product variety, performance and succession of ideas of all that is new in the world of paints.

RIE Royal Import Export di Daniele Chiappa

6.1B8-13

Address: 意大利 Italy MB-Concorezzo-Via Alessandro Volta 80
Tel: +390396043803
Email: daniele@rie-italy.it
Web: www.rie-italy.it

RIE has been known for decades for its work with Italian companies and the foreign market. Our staff is equipped to help you find the right solution for each individual necessity. We have worked in the Industry for many years and we are familiar with all the Italian Luxury brands and healthy food. The customer works with a real purchasing office in Italy.

Yushine International Inc.

6.1B8-08

Address: 美国 United States of America NJ-Metuchen-228 Bridge street
Tel: 86-21-57638248
Email: williams@tri-union.cn
Web:

YUSHINE INTERNATIONAL INC located in New Jersey, USA, it has the full authority of Elie Tahari in greater china; Elie Tahari is one of the most successful luxury fashion brand with more than 600 stores in five continents;in 2013 Elie Tahari was honored by new york city with a mayoral proclamation declaring Wednesday Sep.4th,2013 "Elie Tahari day".

欧来亚国际品牌服装集团有限公司 / E.U.R. International Apparel Group Ltd.

6.1B8-11

Address: 澳门地区 澳门栢蕙花园 Macao AVENIDA CONSELHEIRO FERREIRA DE ALMEIDA NO.122,LJ. BB
Tel: 853-66723223
Email: caccychoi@aliyun.com
Web: www.eurwear.com

E.U.R.欧来亚国际品牌服装集团有限公司旗下品牌 有Mag Taylor、Mag Taylor Men、Puny Pupa等多个不同风格服饰品牌，我们拥有澳门为核心的设计师团队，优质的生产供应链厂家，以及国内人流旺盛的销售渠道。本公司欢迎新进设计师或者原创品牌加入我们行列，抱团在时尚界发展。
Mag Taylor, under the fashion brand E.U.R. International Apparel Group Co, Ltd. along with three other clothing lines: Mag Taylor Men, Mag Taylor Club, Mag Taylor V. Products distribute among women's clothing, men's clothing, children's clothing, casual wear and accessories, and cross-industry development with Mag T. Cafe. We strive to create a positive arm ring in the retail ecosystems.

South Sudan Women Entrepreneurs Association

6.1B8-14

Address: 南苏丹 South Sudan Juba-Newsite, Bilpam Road
Tel: +211927324323
Email: soco4323@gmail.com
Web:

South Sudan Women Entrepreneurs Association is a NGO make all the products by hand using local materials. The products include baskets, kitchen containers, soft tissue boxes, etc.

Fair Trade Group Nepal

6.1B8-15

Address: 尼泊尔 Nepal Province No. 3-Lalitpur-Jhamsikhel
Tel: +977- 5542608
Email: ftgnepal@info.com.np
Web: www.fairtradegroupnepal.org

Fair Trade Group Nepal is a consortium organization of Fair Trading organizations in Nepal. It was registered as a NGO in 1996 with the aim to uplift the socio-economic status of underprivileged and marginalized producers of Nepal. FTG promotes the fair trade sectors and advocate and lobby to ensure supports for member organizations.

清原株式会社

6.1B9-03

Address: 日本 Japan 大阪市-中央区-大阪市中央区南久宝寺町4丁目5番2号
Tel: 06-6252-3497
Email: shu.jian@kiyohara.co.jp
Web:

天使之羽不仅结实，柔软性和弹力性很强。小孩子没踩稳往后倒下去，书包会像枕头一样保护孩子的头部。万一汽车或自行车从后面闯过来，书包也会起到保护孩子身体的作用。书包的多处采用反射材料，是考虑到上学时在路上最容易引起车辆的注意。日本天使之羽书包还是急救神器。地震时用书包护住头部，落水时借助书包浮力自救。

OBB Oberbadische Bettfedernfabrik GmbH

6.1B9-06

Address: 德国 Germany Baden Württemberg-Lörrach-Mühlestr. 54
Tel: +49 7621 / 1520-49 / +49 7621 / 1520-40
Email: jlu@obb.de
michael.weber@obb.de
Web: www.obb.de

OBB公司全名Oberbadische Bettfedernfabrik GmbH，成立于1900年。距今已有119年历史，来自德国南部富裕的黑森林地区。从最初的专业制作羽绒产品开始到如今德国名列前茅的床上用品公司，OBB老牌一直走在行业的前列。
OBB是典型的德国百年工厂，崇尚严谨专业专一的工作作风，本着安全健康环保的宗旨，专心生产，研发高质量的羽绒被及枕头。旗下产品曾获多个专利项目。是世界范围内知名高端床品制造企业。所有产品均在德国制造。
OBB stands for Oberbadische Bettfedernfabrik GmbH, was established in 1900 as a long-established 119-year-old factory from the Black Forest in southern Germany.
From the beginning of the professional production of down products to the top bedding company in Germany, OBB has always been at the forefront of the Bedding industry. All products are "Made in Germany".

Federation of Handicraft Associations of Nepal(FHAN)

6.1B8-16

Address: 尼泊尔 Nepal state 3-Kathmandu-Upama Marg-11 , Thapathali
Tel: 977-1-4244231
Email: info@fhan.org.np
Web: nepalhandicraft.org.np,fhan.org.np

Federation of Handicraft Associations of Nepal (FHAN) is the pioneer, non-profit service oriented organization that is committed to facilitate leadership role to its members and artisans so as to enhance & promote the overall handicraft trade & industry in our country.

樂寶玩具有限公司 / LEPAO TOYS INDUSTRIAL CO.,LTD.

6.1B9-04

Address: 台湾地区 25243新北市三芝區興華里車埕69-2號 Taiwan No. 69-2, Checheng, Sanzhi Dist., New Taipei City 252, Taiwan
Tel: 886-2-26372052 / +886-2-26372052
Email: andy721121@hotmail.com
Web: www.lepao.com.tw

運用LEPAO樂寶積木各個組件的組合變化，可激盪小朋友的內在潛能開發無限創意，創造出更多具有生命力之作品。LEPAO樂寶積木的專用收納盒可讓小朋友養成用後收拾物品的好習慣，且ST安全玩具認可標章，是最能讓家長安心小朋友玩得開心的安全玩具喔！
The combination of the various components of LEPAO Lebao building blocks can stimulate children's inner potential to develop unlimited creativity and create more vital works. The special storage box of LEPAO Lebao building blocks allows children to develop a good habit of packing up the items after use, and the ST safety toy approval mark is the safe toy that can make the parents feel comfortable

德国林德曼皮具公司 / Lindenmann GmbH & Co. KG

6.1B9-07

Address: 德国 Germany Baden-Württemberg-75177 Pforzheim-Lochaeckerstr. 13
Tel: +86-10-68546884
Email: dawning@china.com
Web: www.lindenmann.com

1961年，德国林德曼皮具公司在德国创建，始终专注于高品质皮具产品的设计与制造，包括皮带、皮夹、皮包和其他配饰，并严格遵守欧盟环保标准，保证每件产品100%德国制造。德国林德曼皮具公司在全球拥有超过3,500个合作伙伴，在欧洲乃至全世界拥有最大的皮具产品销售量。
Lindenmann GmbH & Co. KG, founded in Germany in 1961, keeps focusing on the highly-quality leather products, including belts, wallets, bags and other accessories, strictly following the EU environmental protection standards, and guaranteeing 100% Made in Germany of each product. It has over 3,500 cooperative partners worldwide, with the largest sales volume in Europe even the whole world.

Mayborn (UK) Limited

6.1B9-02

Address: 英国 United Kingdom Newcastle upon Tyne-Mayborn House, Balliol Business Park, Benton Lane
Tel: 021-35907341
Email: zhuoya@jahwa.com.cn
Web:

50多年前，汤美星品牌诞生于英国并斩获奖项无数，致力于帮助全世界的父母们更轻松地育儿。我们的目标是成为全世界最受欢迎的婴幼儿品牌。为帮助父母解决日常育儿难题，我们不懈地创新美观实用的婴儿用品。无论是在喂哺，清洁，玩乐还是睡觉时间，我们始终陪伴在你和宝宝身边。
Our award-winning brand was launched in the UK over 50 years ago and was founded with one simple goal - to make everyday life just a little easier for parents around the world. Helping you to Parent On.

奥斯贝格药业有限公司 / ELIAS BRAND MANAGEMENT CO.,LTD.

6.1B9-05

Address: 挪威 Norway Tonsberg-Storgt,17
Tel: +(47) 98858888
Email: eliaschina@vip.163.com
Web: www.eliaschina.com/index.html

《船船总动员艾利亚斯》动画片诞生于挪威，从2005年在挪威电视台TV2播放26集，2008年再加播放13集，2014年在挪威国家电视台NRK播放52集，迄今共播放了 91集。
其3D电影均在挪威各大电影院上映，电影风靡了欧洲大陆、美国、亚洲等全球120多个国家和地区，以多种不同的语言发行。
该片讲的是主角艾利亚斯在海上救死扶伤的故事，同时穿插了不少海上安全常识及环境保护教育，正所谓寓教于乐。
Maritim Gruppen AS Group, a Norwegian company involved in biology, pharmaceuticals, literary creation and other fields,which was founded in 1997 and registered with the Kingdom of Norway Business Bureau. It had acquired the sole agency in China for Elias IP project derivatives of Norwegian Animando AS Animation, Television and Film Group.

STRATIC LEDERWAREN JACOB BONIFER GMBH

6.1B9-08

Address: 德国 Germany LAND HESSEN-RODGAU-KASSELER STR.14
Tel: +49610684930
Email: 360434733@qq.com
Web: www.stratic.de

STRATIC(平流层)欧洲著名的箱包厂，1946年诞生于德国的法兰克福。创始人“JACOBBONIFER“(雅各布，伯尼佛尔)先生，为客人定制旅行箱，购物袋，钱包，女士皮包，渐渐开启了一个属于德国的箱包故事.经历了近70年传承,STRATIC依靠其简洁务实，又不乏科技元素的德国气质，被世界各地的消费者所喜爱和肯定。
STRATIC is a famous luggage brand in Europe. It was born in Frankfurt, Germany in 1946. The founder, Mr. JACOBBONIFER (Jacob, Bernevere), customizes suitcases and shopping bags for customers. After nearly 70 years of inheritance, STRATIC is loved and affirmed by consumers all over the world, relying on its concise, pragmatic and technological German temperament.

BUFFA T4B Services Ltd.

6.1C1-03

Address: 马耳他 Malta Malta-Marsa-T4B Services Ltd, Canter Business Centre, Patri Felicjan Bilocca Str.,
Tel: 00356 25692121
Email: pstaines@t4bservices.com
Web:

Supplier and Manufacturer of high quality Italian Building Materials, Wall finishes and wall decoration, Stucco Antico, Stucco Veneziano, Stucco Calcite

RONG-AN INC.

6.1C1-05

Address: 圭亚那 EAST BANK DEMERARA-LOT A, BLOCK 2, PUBLIC ROAD Guyana EAST BANK DEMERARA-LOT A, BLOCK 2, PUBLIC ROAD，LAND OF CANAAN
Tel: 15063635699
Email: 244507717@qq.com
Web: www.mdljgroup.com

Rong-An Inc., in possession of two forest concessions with a total area of 475,738 hectares, is a humongous, dynamic and integrated forestry business operation in Guyana with specific emphasis on timber harvesting and extraction, intended downstream processing which will enable value added products for local, regional and international markets.

Metal f.a.r srl

6.1C1-06

Address: 意大利 Italy Brescia-Mazzano-Via T. Tasso nr.2
Tel: +390302126900
Email: info@metalfar.bs.it
Web: www.metalfar.bs.it

Young efficienty:this is the aim of Metal f.a.r present since 1979 in the field of lounger and relaxers chairs both on italian and foreign market. From outdoor products to those strictly for home use we offer the right answer to relax

Wood Master

6.1C1-07(01)

Address: 苏里南 Suriname Paramaribo-Duisburglaan 114A
Tel: 5978758538
Email: regwiebers@gmail.com
Web:

Manufacturer of furniture, souvenirs etc.

Cenc Handel

6.1C1-07(03)

Address: 苏里南 Wanica-yogeshweg 26 Suriname Wanica-yogesh road 26
Tel: 5978724307
Email: cenchandelsuriname@hotmail.com
Web: cenchandel.business.site

Manufacturer of natural cosmetic products. Hair and skincare products.

Green Med Pharm NV

6.1C1-07(07)

Address: 苏里南 Suriname Paramaribo-Prinsessestreet 14
Tel: 5978836888
Email: charltonlc@hotmail.com
Web:

pharmaceutical company

N.V. VICTORIA STAR / NV VICTORIA STAR

6.1C1-07(09)

Address: 苏里南 Paramaribo-Prinsessenstreet 255E Suriname Paramaribo-Prinsessestreet 255E
Tel: 5978857822
Email: kathy_kaynibte@hotmail.com
Web:

fashion design

Juvet Cosmetics

6.1C1-07(10)

Address: 苏里南 Paramaribo-Kwattaweg 175 Suriname Paramaribo-Kwatta road175
Tel: 597475543
Email: muntgail@sr.net
Web:

manufacturer of natural cosmetic products, hair- and skin products

Qita Cosmetics

6.1C1-07(11)

Address: 苏里南 Suriname Paramaribo-Blawkepankistreet 22
Tel: 597546713
Email: qitacosmetics@gmail.com
Web:

Manufacturer of all natural cosmetic products

Skin Glanz

6.1C1-07(12)

Address: 苏里南 Suriname Paramaribo-Hadesstreet 6
Tel: 5978554292
Email: info@skinglanz.com
Web: www.skinglanz.com

manufacturer of natural products for body, face, hands

Conservation International Suriname

6.1C1-07(14)

Address: 苏里南 Suriname Paramaribo-Kromme Elleboogstraat 20
Tel: 597421305
Email: ci-suriname@conservation.org
Web: www.conservation.org/suriname

We love Suriname tours and services

6.1C1-07(18)

Address: 苏里南 Suriname Paramaribo-Melaphierstreet 13
Tel: 5978586020
Email: welovesurinametoursandservices@gmail.com
Web:

tour operator

Community Entrance Hinterland

6.1C1-07(21)

Address: 苏里南 Suriname Paramaribo-Stoelmanstreet 8
Tel: 597475966
Email: info@cehinterland.com
Web: www.cehinterland.com

Nature resort. Health and wellness

Christel Nirk Designs

6.1C1-07(23)

Address: 苏里南 Suriname Paramaribo-Altagraciastreet 49
Tel: 597538544
Email: me@christelnirk.com
Web: www.christelnirk.com

designer of authentic shoes, accesories and clothes

Matraxx

6.1C1-07(24)

Address: 苏里南 Kwattaweg 352 Suriname Kwatta road 352
Tel: 5978846244
Email: info@matraxx.net
Web: www.matraxx.net/en

manufacturer of cleaning products. Cleaning services.

KOMAX Industrial Co., Ltd

6.1C1-08

Address: 韩国 ROK(Republic of Korea) Seoul-Geumchun-gu -(Woorim Lions Valley B 10th floor) 168 Gasan Digital 1
Tel: 82028397811
Email: nfo@ikomax.com
Web: www.ikomax.co.kr

KOMAX Industrial Co., Ltd is a maker of various kitchen and household products such as airtight containers, rubber gloves, water bottles, and tumblers. KOMAX has produced products that helped simplify and organize people' s lives

C G ADE PAPA COMPANY LTD

6.1C1-09

Address: 加纳 Ghana P. O.Box 568 DANSOMA - ACCRA GHANA
Tel: 16608853609
Email: 780502157@qq.com
Web: www.afcci.org

公司主要于零售和批发进出口商品，全国各地展会推广。
The company is mainly engaged in the retail and wholesale of import and export commodities, and exhibitions are being held everywhere.

LABORSING (U.S.A.) SAFETY PRODUCTS INC

6.1C1-10

Address: 美国 United States of America 17531 Railroad Street,Suite B,City of Industry, CA 91748
Tel: 021-68878262
Email: liangyanfeng@laborsing.com
Web:

利博盛(美国)是一家专业从事销售高端生活精品的公司,我们位于美国洛杉矶,我们正在中国寻找合作伙伴,欢迎联系我们。
Laborsing is specializing in selling high-end lifestyle products, we are located in Los Angeles, USA, we are looking for partners in China, welcome to contact us.

INDIAN COTTAGE INDUSTRIES

6.1C1-11

Address: 印度 India R.NO.14 A,1ST FLR.,23/35,BOOTAWALA COMPLEX,I. R.RD.,MUMBAI,MAHARASHTRA 400003
Tel: 13590345099
Email: 61513663@qq.com
Web:

INDIAN COTTAGE INDUSTRIES is based in India,specialized in Kashmir handicrafts. Mainly engaed in Kashmir handicrafts,cashmere embroidered scarf shawl,hand-made silk blanket and hand-made tapestry wood carving handicraft.

SKINLOVERS COSMETICS CO., LTD.

6.1C1-12(01)

Address: 韩国 ROK(Republic of Korea) Seoul-Songpa-gu-B-911, M-state, 114, Beobwon-ro
Tel: +82-24221567
Email: hykim@skinlovers.co.kr
Web: www.skinlovers.co.kr

Skin Rover Bus is an expert exporter who has been engaged in cosmetics development activities for 30 years. Patent registration of core technology and 25 certification of overseas specifications. 18 cases of design and trademark registration at home and abroad. It has developed 30 items, including specialized mask packs, and is exporting them to five countries.

Hanbit Korea Co.,Ltd.

6.1C1-12(02)

Address: 韩国 ROK(Republic of Korea) Gyeonggi-do-Gimpo-si-15, Wontong-ro 51beon-gil, Haseong-myeon
Tel: +82-2-564-5391
Email: hbksoap@hanmail.net
Web: www.hanbitkorea.co.kr

Established in 1984, Hanbit Korea Co.,Ltd is a cosmetic manufacturer that recognizes the importance of face-washing/cleansing and focuses on beauty, health, and wellness. Our product portfolio consists of functional beauty soap and cosmetic line for acne, eczema, hair-loss, eyelash nutrition, and pain-relief cream.

SEINDNI CO.,

6.1C1-12(03)

Address: 韩国 ROK(Republic of Korea) Gyeonggi-do-Pocheon-si-202, 41-5, Hobyeonggol-gil
Tel: +82-70-7504-7902
Email: seindni2009@naver.com
Web: www.askindr.com

KOREAN, Snail Cosmetics askinDr. JAPAN, USA & CHINA FDA Registered. BRAND OWNER; SEINDNI CO.,LTD. PRESIDENT ; CHUNG ILCHONG Graduated from HANYANG UNIVERSITY Dept. of Chemical Engineering

E&m Co.,Ltd.

6.1C1-12(04)

Address: 韩国 ROK(Republic of Korea) Gyeonggi-do-Seongnam-si-#510, 21-12, Wiryegwangjang-ro, Sujeong-gu
Tel: +86-31-524-9702 / +82-31-524-9702
Email: Bbae1223@gmail.com
Web: www.espesso-plus.com

E&M, founded in 2014 specializes in manufacturing hair color treatments. Through 4 years, it has made its way up to making its products one of the top items in the market. We've worked hard to develop home-care products that are easy to use and also bring the satisfying results for customers. We have pride in what we make and we value our customers.

Greenzone Co., Ltd

6.1C1-12(05)

Address: 韩国 ROK(Republic of Korea) Gyeonggi-do-Suwon-si-4floor, 2, Changhun-ro 8beon-gil, Jangan-gu
Tel: 82-31-255-1561
Email: grz33@naver.com
Web: www.nasarang.me

Greenzone Co., Ltd which is making natural soap & cosmetics, researches and develops products using premium aroma oils and natural materials obtained from the nature. Greenzone Co., Ltd will do our best to make good cosmetics that my family can use with confidence.

Good Seed Cosmetics

6.1C1-12(06)

Address: 韩国 ROK(Republic of Korea) Gyeonggi-do-Suwon-si-107, Central town-ro, Yeongtong-gu
Tel: +82-31-215-4582
Email: pnct@hanmail.net
Web: www.beautywa.co.kr

Korea Little Red Fairy Coko Cosmetics

IHPARTNERS CO.,LTD

6.1C1-12(07)

Address: 韩国 ROK(Republic of Korea) Gyeonggi-do-Seongnam-city-B dong 1114, 14 Sagimakgol-ro 45, Jungwon-gu
Tel: 82-31-698-2140
Email: Jkkim001@naver.com
Web: www.benepom.net

IHPartners Co., Ltd is a major distribution company established with 29 years of visco-foam product manufacturing experience.

Alpha Display Tech

6.1C1-12(08)

Address: 韩国 ROK(Republic of Korea) Gyeonggi-do-Yongin-si-50, Deokpyeong-ro 1beon-gil, Baegam-myeon, Cheoin-gu
Tel: +82-70-8683-5330
Email: alphadt@nate.com
Web: www.alphawing.co.kr

Alpha Display Tech is Manufacturing Company, established in 2010 year, focused on development and marketing of special glassware product. Nail Shiner WinG which has formed many micron holes on the glass surface allows you to trim your nails and polish them at the same time.

Wordin Co.

6.1C1-12(09)

Address: 韩国 ROK(Republic of Korea) Gyeonggi-do-Hwaseong-si-155, Shinnaman-gil, Namyang-eup
Tel: +82-31-355-5080
Email: master@wordin.com
Web: www.wordin.com

Wordin is the 24-year old company in Korea that specializes in the premium home appliances of high quality, especially multifunctional cooker and Lower body bathing Machine. We are looking to expand our business into the worldwide market and we firmly believe our products will be successful given their excellent quality.

PROM

6.1C1-12(10)

Address: 韩国 ROK(Republic of Korea) Gyeonggido-Goyangsi-110-19,Seonghyeon-ro 268beongil ilsandong-gu
Tel: +86-31-977-9057 / +82-31-977-9057
Email: helloprom@naver.com
Web: helloprom.com

PROM is meaning of 'Product Message'. A management philosophy of PROM is trust. The PROM delivers the design for establishing continuous trust with users. We always do our best for the design because the trust is not made in a day. The design which is derived from human have an insight into environments and people.

NEOMED

6.1C1-12(11)

Address: 韩国 ROK(Republic of Korea) Busan-Saha-gu-20, Jangnim-ro 196Beon-gil
Tel: +82-10-3550-6991
Email: neomed@hanmail.net
Web: neomed1.com

Established in 1965, NEOMED has been specializing in the Medical R&D for more than 40 years and has been managed as a family' business for three generation. We are Korea;s leading manufacturer and exporter of orthopedic, medical, health and sports products. We have more than 250 kinds of products and have 150 patents along with different international certification such as ISO 13485 and US FDA.

Lemuel Beauty co.,ltd

6.1C1-12(12)

Address: 韩国 ROK(Republic of Korea) Chungcheongbuk-do-Cheongju-si-Unit 202, 11, Sajik-daero 11beon-gil, Heungdeok-gu
Tel: +82-70-7778-4479
Email: Cvccc77@naver.com
Web: www.lemuelbeauty.com

Lemuel Beauty discloses its true ingredients as it contains honest, raw materials from nature to deliver healthy beauty. Lemuel Beauty safeguards confidence by applying the principle of minimizing harmful substances to help the intrinsic growth and recovery of skin without damaging the skin' s unique system.

KOHSI Design Centre

6.1C1-12(13)

Address: 韩国 ROK(Republic of Korea) SEOUL-SEOUL-819 BOTANIC PARK TOWER 2, GONGHANGDAERO 213, GANGSEO-GU
Tel: +821071464483
Email: sunmikoh@hotmail.com
Web: www.kohsi.net

KOHSI Design Centre is base in South Korea, Seoul and KOHSI family operating from locations in in the USA(Americas), Singapore (Asia) and Dublin (Europe) to share the sophisticated art and exquisite beauty of delicately crafted traditional Korean style bronze tableware.

(株)美兔国际 / MITO GLOBAL CO.,LTD

6.1C1-12(14)

Address: 韩国 仁川市-仁川市-西区 正西津2路 32，C库（梧柳洞）ROK(Republic of Korea) Incheon-Seo-gu-32, Jeongseojin 2-ro
Tel: 82) 32-876-9733
Email: mitoglobal@daum.net
Web:

MITOGLOBAL CO.,LTD (株式会社 美兔国际)是一家综合性服务贸易公司，主营业务包括韩国美容产品，洗护用品，清洁产品，日化用品，食品的进出口贸易，投资咨询以及国际电子商务。具备完善的供应体制，可提供一站式服务的供应链公司。

UNIJEJU CO., LTD

6.1C1-12(15)

Address: 韩国 ROK(Republic of Korea) Jeju Special Self-Governing Province-Jeju-si-405-ho, Smart Building, 213-3, Cheomdan-ro
Tel: +82) 64.805.9887
Email: ho9314@nate.com
Web: dailish.co.kr

Based on Jeju's natural resources, UNIJEJU has been researching and developing its own differentiated materials. Currently we export to more than 10 countries and is sold in many duty free shops, including Incheon International Airport, Jeju Airport, Lotte and Shilla Duty Free and online shopping malls.

HOUSEWAY

6.1C1-12(16)

Address: 韩国 ROK(Republic of Korea) Chungbuk-Cheong ju-si-95, Gajang-ro 313beon-gil, Seowon-gu
Tel: +82-43-294-3375
Email: bms1980@jsmkorea.com
Web: www.houseway.co.kr

HOUSEWAY supplies various product lines with the trademark INFINI STONE, a kitchenware brand, to build K-Value Houseware global brand.

HAYON CO.,LTD

6.1C1-12(17)

Address: 韩国 ROK(Republic of Korea) Jeollanam-do-Jangheung-gun-2004, 50, Sandan 1-ro, Jangheung-eup
Tel: +82-62-956-1795
Email: hayon1795@naturehayo
Web: www.naturehayon.co.kr

HAYON was established after a long persistent research to add only the natural ingredients without any harmful substances. We only added the ingredients that let skin relax, breath, and illuminate. HAYON insists on adding only natural ingredients that are good for skin without chemicals for fast absorption, good scent and favorable formulation.

PURE COCO CO.,LTD

6.1C1-12(18)

Address: 韩国 ROK(Republic of Korea) Jeollanam-do-Yeosu-si-31, Seonwon 4-gil
Tel: +82-61-681-8282
Email: Woodowoo00@naver.com
Web: www.purecocomall.com

We have produced not only facial soap, but also for kitchen, bath and pet. An anti-dust mask with aroma oil has been exported to other countries. Our effort are on your beauty and health. All of our products are made of natural ingredients approved by the authority. Particularly, our handmad soap has acquired ISO 9001/ ISO 14001, International Quality&Managemant System, for the first in this field

Mamiae

6.1C1-12(19)

Address: 韩国 ROK(Republic of Korea) Gyeonggi-do-Paju-si-423-71, Geomsan-ro, Tanhyeon-myeon
Tel: +82-31-941-9733
Email: mamiae@hanmail.net
Web: www.mamiae.com

We care the child's health so we do not use carcinogenic substances which are harmful to the human body or chemicals which cause allergies. Only 100% non-toxic natural organic raw materials are used.

IONSPA CO.,LTD

6.1C1-12(20)

Address: 韩国 ROK(Republic of Korea) Gyeonggi-do-Bucheon-si-102-1307 397, Seokcheon-ro
Tel: +82-70-7931-3317
Email: ymcho@ionspa.com
Web: www.ionspa.com/en/index

Water is certainly a necessary element for our living. In order to maintain moisture that occupies 70 to 80 percent of our body, we drink water every day and use water to clean our body. Also, water has been used importantly in most industrial area.

BUKWANG CO., LTD

6.1C1-12(21)

Address: 韩国 ROK(Republic of Korea) Chungcheongnam-do-Asan-si-78-15, Yeonamyulgeum-ro 295beon-gil, Eumbong-myeon
Tel: +82-41-549-3382
Email: buk3382@naver.com
Web: www.wims8.com

The WIMS8 is our brand name of mask packs, we have developed diverse and unique mask packs. We've manufactured and distributed various type of mask packs, and certified by the government for effectiveness. We obtained ISO9001, ISO14001, ISO22716 and FDA, KFDA, CFDA certification and has become the leader in mask packs thanks to close cooperation with university lab and factories.

JLB Co.,Ltd

6.1C1-12(22)

Address: 韩国 ROK(Republic of Korea) Jeollanam-do-Jangseong-gun-123, Nanosandan-ro, Nam-myeon
Tel: +82-70-4296-0785
Email: jang3462@hanmail.net
Web: www.balances-cosmetic.com

JLB is a bio-chemical company which was founded in hopes of reviving the nature and healthy ecosystem we once had before the industrial revolution, by replacing elements that contaminate the Earth with natural resources. Naturalistic cosmetics aiming at replacing all ingredients of our products with natural ingredients free from irritative chemical.

Joowon Salt Farm

6.1C1-12(23)

Address: 韩国 ROK(Republic of Korea) Jeonnam-Shinangun-34-7,Sudaeri Bigeum-myeon
Tel: +82-61-275-2981
Email: thesaltfarm@naver.com
Web: www.thesaltfarm.co.kr

Joowon Salt Farm is a salt specialized company that succeeded the family business with 1000 years of tradition! Joowon Salt Farm is striving to give back by adopting international standards ISO22000 (Food Safety Management System) and ISO14001 (Environmental Safety System) to put the top priority on environmental and food safety.

Hunacosmetic

6.1C1-12(24)

Address: 韩国 ROK(Republic of Korea) Gwangju City-Gwangju City, 301-730 Shin Yong-dong, Buk-gu
Tel: +82-1877-1802
Email: hunacell1802@naver.com
Web: www.hunacell.co.kr

Dr. HUNACELL, an anti-aging cosmetics company that adds technology to nature, is researching and developing skin nutrients that are applied, and its flagship products are "Dr. Huynacel Daily Talks," an anti-aging cosmetics that improve wrinkles and whitening, and "Dr. Hughesel Weekly's."

TD GLOBAL CO ., LTD

6.1C1-12(25)

Address: 韩国 ROK(Republic of Korea) Gwangju-Gwangsan-gu-39-25, Jingoksandan2beon-ro
Tel: +82-62-944-4033
Email: jossoo@hanmail.net
Web: tdglo.com

Our company is a manufacturing and distribution company and mainly deals with products such as food and living goods, cosmetics.

FEELCOSMETIC CO., LTD.

6.1C1-12(26)

Address: 韩国 ROK(Republic of Korea) Gwangju-Buk-gu-79 Yangsan-ro, Buk-gu
Tel: +82-62-267-8071
Email: feel@feelcosmetic.com
Web: www.feelcosmetic.com

Feelcosmetic Co., Ltd. was built in Gwangju City, South Korea in 1995. We have many kinds of brands. mmeiday is a medium-priced product. The products of this brand are necessities that we must use at home. And every product of mmeiday is very practical and affordable. We can provide a full set of comprehensive and systematic services.

Bo&Bong

6.1C1-12(27)

Address: 韩国 ROK(Republic of Korea) Gwangju-Gwangsan-gu-9,Cheomdanjungang-ro 116beon-gil
Tel: +82-10-4605-6861
Email: gimbbo@hanmail.net
Web: boandbong.com

Bo & Bong specializes in develeoping a variety of design products through fusion of ceramics and other materials. Recently, we have launched the brand 'CeraSilver' for the jewelry collections which combine ceramic pendants and silver handicrafts, and have been offered selling space in several department stores and shopping malls in South Korea.

TAEBONG.CO.,LTD

6.1C1-12(28)

Address: 韩国 ROK(Republic of Korea) Gwangju-Buk-gu-159-30, Yangil-ro
Tel: +82-62-571-6470
Email: hrm@taebong.co.kr
Web: www.taebong.co.kr

TAEBONG is in charge of sales and marketing in both domestic and oversea market with variety of business area, Nonwoven, Cosmetic, Cleansing, Hygiene, daily use product and variety of cotton products. We are developing and producing variety of products to brand companies as of professional OEM/ODM experience TAEBONG is customer centered company.

LesbeauxAmie

6.1C1-12(29)

Address: 韩国 ROK(Republic of Korea) Chungcheongbuk-do-Cheongju-si-9, Oksansandan 2-ro, Oksan-myeon, Heungdeok-gu
Tel: +82-1544-2326
Email: sun2268@naver.com
Web: www.amies2.co.kr

Using the has been developed extract (peptides) in LesbeauxAmie, the high quality cosmetics (double functionalality) being developed. LesbeauxAmie is changing benefit from the nature to true women's beuatyt.

MISSPLUS

6.1C1-12(30)

Address: 韩国 ROK(Republic of Korea) Chungbuk-do-Cheongju-si-#810, 134, Gongdan-ro, Heungdeok-gu
Tel: +82-70-7744-8350
Email: cjmissplus@gmail.com
Web: www.missplus.co.kr

All of 'MISSPLUS' products are handmade and packaged at Cheong-Ju in Korea. We pride ourselves on the lovely atmosphere within the factory that is made up of teams of dedicated staff within each department. Soap production, diffuser filling, aroma candle pouring and bath melts are all formulated with care and precision by a highly trained and skillful workforce.

Vitdam.Co., Ltd.

6.1C1-12(31)

Address: 韩国 ROK(Republic of Korea) Chungcheongbuk-do-Cheongju-si-95, Gajang-ro 313beon-gil, Seowon-gu
Tel: +82-43-221-1478
Email: byo2005@hanmail.net
Web: www.vitdam.co.kr

Established in 2012, VITDAM CO., LTD. Is a venture company that develops and sells electric ranges and eco-friendly foldable water bottles, has a technology laboratory, and has been recognized as a promising small and medium export company. The electric range is exported to China CCC and Europe CE in two, and the folding water bottle has been certified by the US FDA, Europe, Germany, China, ect.

BIOPOLYTECH CO., LTD.

6.1C1-12(32)

Address: 韩国 ROK(Republic of Korea) Chungcheongbuk-do-Cheongju-si-Sejung Technovalley Suite 809, 134 Gongdan-ro, Heungdeok-gu
Tel: +82-43-212-9144
Email: biopolytechkr@gmail.com
Web: www.biopolytech.com

Founded in 2004, Biopolytech Co., Ltd. is a South Korean manufacturer and distributor of K-Beauty cosmetics and supplements, which specialize in anti-aging and anti-bacterial functions with the main ingredients of low-molecular marine collagen and chitosan oligosaccharide. Biopolytech has its own brand "SKINUA", and also does OEM and ODM orders for many large companies all over the world.

HELIOS CO.LTD

6.1C1-12(33)

Address: 韩国 ROK(Republic of Korea) Jeju-do-Jeju-si-#111, Jeju Bio-Complex, 16 Sancheondan-dongro
Tel: 82-10-6318-7979
Email: Keep10@heliosjeju.co.kr
Web: www.heliosjeju.co.kr

HELIOS is the name of an independent corporate body that started a professional spa center in 2004, and currently has one-stop service system for development and domestic and export sales of spa & cosmeceutical products widely used for wellness industry.

JJ ART TOY

6.1C1-12(34)

Address: 韩国 ROK(Republic of Korea) Jeju-do-Jeju-si-#401, Gwandeok-ro 15-gil 23
Tel: +82-70-8851-0020
Email: toypokie@naver.com
Web: www.jjarttoy.com

JJ Art Toy is a company that makes design toys. The product is original and delicate and is a hobby toy that can be enjoyed by all men, women and children. The products introduced at the fair are 12 animal toys and cat design toys. Please pay a lot of attention to the product. Thank you.

Searchlight H&B Co. Ltd.

6.1C1-12(35)

Address: 韩国 ROK(Republic of Korea) Jeju-do-Jeju-si-52-22 Jongdaldong-gil, Gujwa-eup
Tel: +82-2-6342-5162
Email: rarita@peaceofskin.com
Web: www.peaceofskin.com

Searchlight H&B Co. Ltd. is the exclusive manufacturer of the seahorse cosmetics in Korea. We use the 'Seahorse Peptide (Tripeptide-1)' extracted from the artificially cultivated seahorse from Jeju Island which is certified as the traditional medicine and seafood by KFDA, and Halal as the safe key ingredient of our products

BKSU Inc.

6.1C1-12(36)

Address: 韩国 ROK(Republic of Korea) Jeju-do-Jeju-si-#201-2, Bio convergence Center, 102, Jejudaehak-ro
Tel: +82-70-8671-4521
Email: gbkim@bksu.kr
Web: www.bksu.kr

"We will be a company that delivers the natural energy of clean Jeju."
The BKSU Inc. is a company that promotes the blue ocean of the same industry actively based on the trust and belief "about products, toward customers".

MOTHER-K

6.1C1-12(37)

Address: 韩国 ROK(Republic of Korea) Gyeonggi-do-Seongnam-si-(1103, KINS Tower) 8, Seongnam-daero 331beon-gil, Bundang-gu
Tel: +86-213475-3731
Email: cdd0715@motherk.co.kr
Web: www.motherk.co.kr

Mother-K was established 2010 with the goal of an honest and safe approach to baby goods but producing better products. We seek to make baby goods for mothers who are always concerned about harmful environments and untrustworthy products, by making products that are trustworthy and give customers total peace of mind.

SANGLY CO.,LTD

6.1C1-12(38)

Address: 韩国 ROK(Republic of Korea) Gyeonggido-Gimpo-si-86,Daegotbuk-ro,403beon-gil,Daegot-myeon
Tel: +82-31-986-6201
Email: 1130kcg@hanmail.net
Web: www.chefway.co.kr

Our main products are Aluminum die-casting cookware &Aluminum gravity casting (hand cast) cookware such as frying pan,wok.pot series (dutch oven,casserole &stock pot), double pan &Rost pan, etc.

HB Global Co.,Ltd.

6.1C1-12(39)

Address: 韩国 ROK(Republic of Korea) Gyeonggi-Do-Yongin-Si-Room 602, No 17, Dongcheon-Ro, Suji-Gu
Tel: (82) 070-4888-0597
Email: martin@consensus.co.kr
Web: www.hb-group.co.kr

HB Global Co., Ltd. launched the premium brand "Consensus" and the economical brand "Enbliss" respectively on the slogan "We'll make better for next generation".

DBK Korea Co., Ltd.

6.1C1-12(40)

Address: 韩国 ROK(Republic of Korea) Gyeonggido-Hwaseong City-383 Noha-gil, Paltan-myeon
Tel: +82-2-578-7213
Email: dw.lee@dbkkorea.com
Web: www.dbkkorea.com/index_cn.html

DBK KOREA was established under the belief that the best quality is the most important to the customer satisfaction.
Our Company principle is that
1.Value Creation for customer's comfortable life.
2.Company Management style for Human beings.
Through technical cooperation with Germany and Spain DBK, we have grown to become the No.1 OEM/ODM manufacturer in the insecticide Korean market.

HUI KUEN CO.,LTD

6.1C1-12(41)

Address: 韩国 ROK(Republic of Korea) Seoul-Seoul-#1006, Digital-ro 9 gil 99, Geumcheon-gu
Tel: 82 2 866 1846
Email: bullim91@naver.com
Web: www.hkhormiga.com

In 1995, Huikuen Corporation was established based on our 20years of experience in the field of leather shoemaking and our craftsmanship determined to make only the best products. We specialized in crocodile and ostrich handbags and exported them to Japan.

Skinchu Co., Ltd.

6.1C1-12(42)

Address: 韩国 ROK(Republic of Korea) Gyeonggi-do-Hwaseong-si-1-812,Apexcity,823,Dongtansunhwan-daero
Tel: +82-31-831-3730
Email: davidkim@skinchu.com
Web: www.skinchu.com

Skinchu was founded in 2015, and it provides a low-stimulation Beauty Life cosmetics which made with the highest quality, customer-oriented mind.
Skinchu is a cosmetic brand that conveys the natural vitality of lotus flowers. It is a safe & reliable product for many people to choose.

ONGOONG Co.,Ltd

6.1C1-12(43)

Address: 韩国 ROK(Republic of Korea) Chungcheongnam-do-Asan-si-480-46, Seobunam-ro, Sinchang-myeon
Tel: +82414292233
Email: aromania14@naver.com
Web: ongoong.asan.go.kr

ONGOONG is Korea's leading industrial company that specializes in kosmedical cosmetics based on Asan hot spring water based on the herbal medicine fermentation technology of hot spring water, the research and development of various functional cosmetics are conducted.

Powerful X Co., Ltd

6.1C1-12(44)

Address: 韩国 ROK(Republic of Korea) Seoul-Gangnam-Gu-Powerful-X BD, 13 ,115 Gil, Nonhyeon-Ro
Tel: +82-2-500-8088
Email: Kimberly.kim@powerfulx.com
Web: www.powerfulx.com

Powerful-X is a new concept health care cosmetics which is based on healthcare and relieves muscular and joint problems of sports athletes and the general public. It is developed in Korea and is recognized in domestic and overseas market.
Many professional athletes and general people muscles, has been well received in joint body care.

AVAJAR CO.,LTD.

6.1C1-12(45)

Address: 韩国 ROK(Republic of Korea) Seoul-Seoul-Seoul Forest IT Castle,1501-1504 , Gwangnaru-ro 130, Seongdong-gu
Tel: +82-10-2582-5135
Email: dhyang@avajar.co.kr
Web: www.avajar.co.kr

Avajar is a professional daily self-care cosmetic brand which offers the best solution to enhance skin condition at a rational price. By understanding the lifestyle of modern people that receive a lot of bad influences such as stress, lack of sleep and bad eating habits.

KWANG JE CO., LTD.

6.1C1-12(46)

Address: 韩国 ROK(Republic of Korea) Gyeonggi do-Seongnam-si-765, Daewangpangyo-ro, Sujeong-gu,
Tel: +82314950271
Email: info@coscodi.co.kr
Web: www.coscodi.com

True beauty lies beneath your skin. At COSCODI, we focus on bringing out your beauty healthily and organically, with the best natural ingredients that are clinically proven effective in improving overall skin quality. Here we strive to help you better maintain your skin balance through creating healthy and hypo-sensitive cosmetics with a large color diversity.

NEWLAND ALL NATURE CO., LTD.

6.1C1-12(47)

Address: 韩国 ROK(Republic of Korea) Gangwon-Wonju-80-79, Jagap, Jijeong
Tel: +82-10-9449-9198
Email: newlandys@naver.com
Web: www.newlandallnature.com

Our Newland Cosmetics is located in clean Gangwon area and produces products like 12 health functional foods, 10 functional cosmetics, 20 basic cosmetics, 25 color cosmetics, and 8 body products since founded in 2008.

Dong Sung Bio Pharm.co.,Ltd.

6.1C1-12(48)

Address: 韩国 ROK(Republic of Korea) Seoul-Seoul-683, Dobong-ro, Dobong-Gu
Tel: 82 02 6911-3745
Email: intoj@hanmail.net
Web: dongsung-pharm.com

Founded in 1957, Dongsung pharmaceutical has led 60 years to be a mid-size pharmaceutical. We have taken the lead for the modernization of pharmaceutical industry by establishing KGMP factory and central research center with high end facility in Asan, Chungnam.

GIBEST Corp.

6.1C1-12(49)

Address: 韩国 ROK(Republic of Korea) Seoul-Seoul-2F, Mabang-ro48, Seocho-gu
Tel: 82-2-575-4355
Email: 9tails2015@naver.com
Web: www.9tails.co.kr

Our company, Gibest makes honest and wholesome cosmetic products, which many companies seek to do, but many are unsuccessful. Since its establishment in 2002, Gibest has released many hit products as "a company specializing in marketing and home shopping video production."

BSG H&B CO., LTD.

6.1C1-12(50)

Address: 韩国 ROK(Republic of Korea) Seoul-Seoul-B-1005, 53 Mapo-daero, Mapo-gu
Tel: 82-2-702-4167
Email: youngkim@bsg7.com
Web: bsg7.com

BSG H&B is a manufacturer of cosmetics and health supplements. With a cosmetic brand named 'DIAPIA', we offer customers facial mask packs and basic skincare products such as serum and cream. They are sold at online and offline duty free shops and exported to 8 foreign countries including China, Vietnam, Malaysia, and Ecuador.

YD INTERNATIONAL

6.1C1-12(51)

Address: 韩国 ROK(Republic of Korea) Gyeonggido-Goyangsi-116, Naeyugil, Deogyanggu
Tel: +82-10-5595-6287
Email: Nusin98@naver.com
Web: www.ydinternational.co.kr

Hello. We are the professional trading company of Korea cosmetics, located in Korea. Currently we have long term business with about 50 clients in over 12 countries, based on competitive price and trust. Our main business is exporting famous, popular, and K-pop stars used cosmetic brands and products. Our all employees are fluent with English and Chinese for easier communication between us.

J&G COSMETICS CO., LTD.

6.1C1-12(52)

Address: 韩国 ROK(Republic of Korea) SEOUL-SEOUL-NO422, GUMGWAN, SEOUL AUTO GALLERY, YANGJEDAERO 11GIL 36 ,SEOCHOGU
Tel: +821053101296
Email: slonykim@gmail.com
Web: www.gsley.co.kr

SKIN CARE COSMETICS BODY CARE COSMETICS MAKE UP COSMETICS

COSMELAB CO., LTD

6.1C1-12(53)

Address: 韩国 ROK(Republic of Korea) Seoul-Seoul-3F., CL Bldg, 42, Teheran-ro 28-gil, Gangnam-gu
Tel: +82-70-8769-3370
Email: Swkim@cosmelab.com
Web: www.cosmelab.com

"Cosmelab" is formed by combining the two words "cosmetic" and "laboratory" and represents all things related to cosmetics, including cosmetic research, planning, manufacturing, distributing, trade, consulting etc.

Mineralhouse Co., Ltd.

6.1C1-12(54)

Address: 韩国 ROK(Republic of Korea) Gyeonggi-do-Seongnam-si-163, Sujeong-ro, Sujeong-gu
Tel: +86-21-6479-0605
Email: drdeep@yeah.net
Web: www.minehouse.co.kr

Mineralhouse Co., Ltd. is manufactures and distributes of natural mineral & Herb cosmetic "Dr.Deep" Brand.
It is a company that trusts with costomers by produce that considers each ingredient for the skin health of the whole family from newborn baby to senior

PURE VALLEY

6.1C1-12(56)

Address: 韩国 ROK(Republic of Korea) Gwangju-Buk-gu-B12 Faculty Building, 50, Dongmun-daero
Tel: +82-62-417-2378
Email: purevalley@naver.com
Web: noscos.co.kr

Natural Cosmetic PURE VALLEY which makes pure cosmetic with natural materials "Skin becomes beautiful only when makes up cleanly." "Cosmetic made with natural materials that make our skin healthy and beautiful!"

Marine Techno Inc

6.1C1-12(57)

Address: 韩国 ROK(Republic of Korea) Jeollanamdo-Suncheon-203 Standard Factory, Yulchonsandan 4ro 26-192
Tel: +82-70-7612-0537
Email: marinetechno417@naver.com
Web: www.marinetechno.kr

We are extracting high valuable raw material, marine collagen from salmon skin and manufacturing applied products, cosmetics and health care food. Our intellectual properties are achieved recognition from Jeonnam regional IP center and chosen for 2015 IP star company.

PALBO TRADE

6.1C1-12(58)

Address: 韩国 ROK(Republic of Korea) Gyeongsangbuk-do-Sangju-si-8, Haendaemi 1-gil, Sabeol-myeon
Tel: +82-54-533-0365
Email: hee580516@naver.com
Web: www.kiwigolf.kr

PALBO TRADE is a wholesale and a retail company, which produces polarized sunglasses. PALBO TRADE is intended to distribute products both domestic and overseas market. PALBO TRADE is launching polarized sunglasses in the brand name of 'Albatro'.

SOL NARA

6.1C1-12(59)

Address: 韩国 ROK(Republic of Korea) Gyeongsangbuk-do-Uiseong-gun-1018, Anpyeonguiseong-ro, Uiseong-eup
Tel: +82-54-834-6000
Email: solnara100@naver.com
Web: www.solnara.net

SOL NARA, as a leading company in domestic pine needle R&D, extracted effective ingredients of pine needles for human body and developed food, cosmetics, natural perfumes. Besides, it is using 100% Geumgang pine needles produced in Korea and invests 20% of profits every year in pine needle R&D.

Skylake

6.1C1-12(60)

Address: 韩国 ROK(Republic of Korea) Gyungbuk-Gyungsan-city -29-8 solmok-gil wachon-myun
Tel: +82-10-6511-8490
Email: dappa0305@naver.com
Web: www.skylake.kr

Korean old saying goes "Farmer's mind is Sky's mind."
The Skylake's special herb extract is distilled water from premium natural herbs.
Skylake = Sky ; farmer's heart, soung energy + lake; pure water, a long waiting This is elaborate natural cosmetic with farmer's effort. The place where our factory located is designated as a provincial park.

Chang Pyeong Co.,Ltd

6.1C1-12(61)

Address: 韩国 ROK(Republic of Korea) Gyeongsangbuk-do-Gumi-si-Room406, Venture Center, 61, Daehak-ro
Tel: +82 53 247 8882
Email: dajundae@naver.com
Web: www.modanoco.com

Use natural ingredients to make functional cosmetics and soaps such as acne, whitening, and wrinkle improvement.In particular, GABA is researching and launching basic cosmetics to make clean and clear skin.

Avira Co., Ltd.

6.1C1-12(62)

Address: 韩国 ROK(Republic of Korea) Daegu-#503. Gukje-Office 432 Dongdaegu-ro, Dong-gu
Tel: +82-53-746-7307
Email: avira7307@gmail.com
Web: www.theavira.com

Our company develops cosmetics from natural minerals.

WOOSOO CO., LTD.

6.1C1-12(63)

Address: 韩国 ROK(Republic of Korea) Daegu-#933, Daegu Technopark R&D Center 62, Seongseogongdan-ro 11gil, Dalseo-gu
Tel: +82-53-591-7025
Email: kimdh@woosoocorp.com
Web: www.missbeautyline.net

After starting off as 'WOOSOO SOCKS' in 2003, we established corporation as 'WOOSOO CO., LTD.' in 2014. We have been developing and manufacturing hosiery and arm sleeves to contribute to the comfortable customer's life. We fast respond to continuously changing market trends and customer's needs by endlessly developing value-added products based on proprietary technology.

Lillycover Co., Ltd

6.1C1-12(64)

Address: 韩国 ROK(Republic of Korea) Daegu-Daegu-Creative Factory 4F, #41260, 471, Dongdaegu-ro
Tel: 82-53-756-1140
Email: Lillycover_br@lillycover.com
Web: lillycover.com

LILLYCOVER has developed a unique solution for skin care management that you can use anywhere and anytime for immediate personal skin care monitoring, analysis, and therapy. LILLYCOVER platform is based on real-time sensing and monitoring of your skin condition and, with Atmospheric pressure Plasma Massage Therapy Device, you can apply immediate dermal therapy.

Dasan L&C Co Ltd

6.1C1-12(65)

Address: 韩国 ROK(Republic of Korea) Daegu-Daegu-358-153, Galsandong, Dalseogu
Tel: +82-53-593-0061
Email: master@soaplife.co.kr
Web: www.soaplife.co.kr

We started as DASAN firm in 2000 for a special promotional sale and have since established itself as a company for the manufacture and distribution of functional herb soaps for health conscious customers. We started with an established branch in Seoul and later expanded to Dae-Jeon, Busan and the whole of Korea.

NANOOM Company

6.1C1-12(66)

Address: 韩国 ROK(Republic of Korea) Jeollabuk-do -Jeonju-si-#201, 9-10, Hyeonmu 3-gil, Wansan-gu
Tel: +82-63-274-7379
Email: nanoom@paran.com
Web: www.gmask.net

Hello. It is NANOOM, a company that produces child sleepwear. NANOOM produces yarn and manages all processes, ranging from knitting and printing to cutting in Korea. NANOOM, a second-generation company with over 30 years of experience, produces products with great design and quality made in Korea and focuses on the domestic market but strives to export its products.

REINPLATZ COSMETIC

6.1C1-12(67)

Address: 韩国 ROK(Republic of Korea) Jeollabuk-do-Gochang-gun-58,Gosunonggongdanji-gil, Gosu-myeon
Tel: +82-2-6093-5222
Email: reinplatzljy@daum.net
Web: www.reinplatz.com

ReinPlatz is a naturalism cosmetic brand that makes customers beautiful utilizing natural benefits of Gochang, a clean area and pursues eco-friendly green life to keep environmental health. ReinPlatz Cosmetics made with natural ingredients gathered from Gochang represent coexistence with nature.

Pgm co.,ltd.

6.1C1-12(68)

Address: 韩国 ROK(Republic of Korea) Jeollabuk-do-Jinan-gun-60, Geobukbawi-ro, Jinan-eup
Tel: +82-63-903-3352
Email: shypgm@hanmail.net
Web: www.shypgm.com

It manufactures and sells eco-friendly hand soap and red ginseng rex gel. It also carries out import and export trade operations.

DEQUA Co.,Ltd

6.1C1-12(69)

Address: 韩国 ROK(Republic of Korea) Jeollabuk-do-Jeonju-si-945-6, Girin-daero, Deokjin-gu
Tel: +82-63-212-9645
Email: dequa@naver.com
Web: www.dequa.co.kr

DEQUA is a company that aims to create a future where human beings, nature and technology coexist. Based on state-of-the-art technology, we are a leading manufacturer of mosquito nets, water treatment systems.

COOP.ONRE

6.1C1-12(70)

Address: 韩国 ROK(Republic of Korea) Jeollabuk-do-Jeonju-si-3F, 25, Pungnammun 4-gil, Wansan-gu
Tel: +82-63-282-0028
Email: muze-@hanmail.net
Web: www.cooponre.com

COOP.ONRE We wish to preserve our community's unique values, environment and tradition by engaging in entrepreneurial activities together with the community and to revive the local community and its culture by acting with our neighbors in mind.

BALANSWING

6.1C1-12(71)

Address: 韩国 ROK(Republic of Korea) Jeollabuk-do-Iksan-si-64, Inbuk-ro
Tel: 02-1661-9479 / +82-2-1661-9479
Email: Sangjae.lee.7@gmail.com
Web: www.balanswing.net

BALANSWING is the world's first kinetic functionality wear developer with vision for the fusion of textiles and sports.The main product is the world's first Kinetic functionality wear designed for golf swings

Silver Fox Company

6.1C1-12(72)

Address: 韩国 ROK(Republic of Korea) Gyungnam-Changwon-601, 54 Charyung-ro 48bungil, Uichang-gu
Tel: 070-5153-3658 / +82-70-5153-3658
Email: silverfoxco@naver.com
Web: www.silverfoxi.com

Silver Fox Company has developed own brand since established on 1995. As a result, Silver Fox Company is exporting products to around 50 countries. For example, East South Asia, Middle east, Africa, Europe, South America, Etc as exporting promising company and also technology excellence venture company.

AMBITIONEM INC.

6.1C1-12(73)

Address: 韩国 ROK(Republic of Korea) Seoul-4F, 7, Seongmisan-ro 29an-gil, Mapo-gu
Tel: 010-2702-1936 / +82-10-2702-1936
Email: jykang@ambitionem.com
Web: ambitionem.com

Ambitionem seeks for innovative design and topnotch functionality. Our main offering is "Worldmap Backpack" that marks the country you have travelled, and we also make best travelling products including suitcase backpack, camera bag, and suitcase.

fondation fatou sylla

6.1C2-03

Address: 科特迪瓦 Côte d'Ivoire 15 BP 504 ABIDJAN 15 ABIDJAN
Tel: 225 21 27 21 53
Email: fondationfatousylla@yahoo.fr
Web:

promotion of African crafts

郭丽铵包装工业有限公司 / KUEK & KUEH PACKAGING INDUSTRIES SDN.BHD

6.1C2-06

Address: 马来西亚 砂拉越州-古晋-Lot 1017, Sec 66, Bintawa Ind.Eatate, Jalan Tekad,93450 Kuching, Sara Malaysia Sarawak-Kuching-Lot 1017, Sec 66, Bintawa Ind.Estate,Jalan Tekad, 93450 Kuching, Sara
Tel: +6082348348
Email: kuekueh@gmall.com kuekkueh@gmall.com
Web:

郭丽铵包装工业有限公司，以专业的技术和高效的团队长期致力于工艺品的开发与研究。主营项目：生铁铸造铁壶铁器以及木制工艺品的开发制造与销售。
产品介绍：铁壶、亦称铁瓶，是用来煎茶煮水的器皿。以生铁为原料，用传统铸造工艺，以及通过后期的手工打磨，成型的茶壶，茶具养生，观赏和收藏价值。
Guoli Ammonium Packaging Industry Co., Ltd. has long been committed to the development and research of handicrafts with professional technology and efficient team. Main project: development, manufacture and sale of pig iron casting iron pot ironware and wooden handicrafts.
Product introduction: Iron pot, also known as iron bottle, is used to cook tea to boil water. Using pig iron as raw material.

Hyurim hwangchil co.,ltd

6.1C1-12(74)

Address: 韩国 ROK(Republic of Korea) Gyeongsangnam-do-Hadong-gun-907-11, Gyeongseo-daero, Hoengcheon-myeon
Tel: +82-10-6355-6789
Email: feeljcs@naver.com
Web: www.hyurim.kr

Hyurim hwangchil Co., Ltd. is a venture company reserching Dendro panax morbifera which is the only native in Korea.
Dendro panax morbifera is also called 'ginseng tree'.
Hyurim Hwangchil Co., Ltd. produce and export natural cosmetics that help improve troublesome skin by using the excellent anti-inflammation, antibacterial and skin regeneration effect of Hwangchil tree extract.

Dutch Creative Brands B.V

6.1C2-04

Address: 荷兰 Netherlands Groothandelsweg 1 2645 EH Delfgauw, 2645
Tel: 68455633
Email: howardzhang@163.com
Web: www.dutchcreativebrands.com

Dutch Creative Brands是来自荷兰的世界著名创意酒具品牌，源自于1986年，以最先发明真空存储葡萄酒方法而著名，在追求品质与功能的品牌精神指引下，不断创新与研发设计，成为葡萄酒用具领域和创意厨房用具的全球优质品牌，足迹遍布五大洲，风靡世界超过75个国家，值得您仔细品味。
Dutch Creative Brands, is the world famous Creative wine brand from the Netherlands, originated in 1986, famous for first invented the vacuum storage wine method, in the pursuit of quality and function of the brand spirit under the guidance, become wine utensils and Creative kitchen utensils in the field of global quality Brands, in five continents, popular in the world more than 75 countries.

HANCRAFT EESTI OU

6.1C2-07

Address: 爱沙尼亚 Estonia TOOSTUSE27-26/1, KOHILA ALEV, KOHILA, RAPLA MAAKOND, 79806
Tel: +372895625869
Email: 2231103634@qq.com
Web:

我公司位于爱沙尼亚塔林老城区。公司主要经营手工艺制品，手工编织地毯，围巾等纯手工定制产品。公司产品具有浓郁的爱沙尼亚风情，主要出口欧美。现在拟大力拓展中国市场，丰富亚洲人生活方式，寻求合作伙伴。
Our company is located in the old city of Tallinn, Estonia. The company mainly engaged in handicraft products, hand-woven carpets, scarves and other pure hand-made products. The company's products have a strong Estonian style, mainly exported to Europe and the United States. Now we plan to vigorously expand the Chinese market, enrich the Asian way of life, and seek partners.

保丽公司 / POLYFLOR LTD

6.1C2-01

Address: 香港地区 上海市-闵行区秀文路898号西子国际中心5号楼1607室 RM 1402A, 14F, Block B, Sea View Estate, 4-6 Watson Road, North Point, Hong Kong China
Tel: 021-34531418-102
Email: mail@linkstrong.net
Web:

英伦尊世 领先全球
百年历史鉴证弹性地材的诞生、演变和发展
欧洲地板协会的创始人及轮值主席
多元化的产品组合满足各行业领域需求
长期坚定致力于中英贸易与投资
Covering the world
Witness the birth and development of the vinyl flooring industry
The founder and committee of European Flooring Association
True diversified product portfolio
Committing to invest on trade between UK and China

EASY REST PILLOWS PTY LTD

6.1C2-05

Address: 澳大利亚 Australia VIC-DANDENONG SOUTH-27 BAMWINE COURT
Tel: 0061 3 97922300
Email: david.h@easyrest.com.au
Web: www.easyrest.com.au

澳大利亚Easy Rest是一家成立于1971年的具有悠久历史的家族企业，我们拥有100名以上的员工，特别为床品生产而设计建造的专业化工厂座落于澳大利亚墨尔本的南丹德农区，作为澳大利亚床品行业领军角色的高端床品制造商，我们拥有自己的知名品牌Easy Rest以及其它多个代工品牌的优质聚酯纤维系列和羊毛系列的被子和枕头。
Easy Rest is an Australian owned family business founded in 1971 and employs in excess of 100 personnel in our purpose-built manufacturing plant in Dandenong South, Melbourne.
We have established ourselves as Australia's leading manufacturer of premium quality Easy Rest and Private Brand polyester & wool filled pillows, quilts and cushion inserts.

TAWHEED ARTS

6.1C2-08

Address: 印度 India 125/2 usanabad-B colony umerhair srinagar j&k 190020
Tel: +919796544496
Email: niu13773373286@163.com
Web:

Tawheed arts斗河艺术有限公司注册地址为印度新德里。是一家专业生产及销售手工艺品公司。公司人数：200人，主要经营及生产：纯铜手工艺品，纯木质家具等家居用品，公司致力于促进国际双边贸易，向全世界展示印度的特色工艺品，也将从中国到印度引进优秀产品，并有助于提高印度人民的生活质量。
Tawheed artsDohe art co., LTD. Registered address is new Delhi, India. Is a professional production and sales of handicrafts company. The company number: 200, the main business and production: pure copper handicrafts, household articles for use such as pure wooden furniture, the company is committed to promoting international trade, show the world the special arts and crafts of India, will also in.

株氏会社細工坊 / Hosokobo Co.,Ltd

6.1C2-09

Address: 日本 北区-大阪市-大阪市北区天満二丁目1番16-134号 Japan Kita ward-Osaka City-Tenman nichome,Kita ward, Osaka City, 161-1304
Tel: 15618933338
Email: 550645610@qq.com
Web:

布里克手工艺艺术 / ARTISANAT M'BOIRIK-ART M'BOIRIK

6.1C2-12

Address: 毛里塔尼亚 毛里塔尼亚-特夫拉格 宰纳 Mauritania Mauritania-TEVRAGH ZEINA
Tel: 36212129
Email: 1165226@qq.com
Web:

公司主营手工艺艺术品，非洲特色工艺品等，望洽谈合作。
The company's main arts and crafts, African characteristic crafts, etc., hope to negotiate cooperation.

东洋佐佐木玻璃株式会社 / TOYO-SASAKI GLASS Co.,Ltd.

6.1C2-15

Address: 日本 东京-中央区-东京都中央区日本桥马食町2-1-3 Japan Tokyo-Chuo-ku-2-1-3 Nihombashi Bakurocho
Tel: +81-3-3663-1273
Email: ra_getsu@toyo.sasaki.co.jp
Web: www.toyo.sasaki.co.jp

Toyo-Sasaki Glass was created in 2002 following the merger between the Houseware Division of Toyo Glass and Sasaki Glass, two of Japan's oldest and largest glassware manufacturing companies. The combination of their long-standing traditions, technologies, and extensive sales networks have made TSG the biggest glassware manufacturer in Japan.

Bioforma Benessere Per Dormire Srl

6.1C2-16

Address: 意大利 Brindisi-Ostuni-Via dell'Edilizia Italy Brindisi-Ostuni-Via dell'Edilizia
Tel: +390831338745
Email: direzione@bioformaitaly.com
Web: www.bioformaitaly.com

Bioforma Benessere Per Dormire Srl是一家总部位于奥斯图尼 (Br) 的意大利公司，该公司在家具行业经营了近20年。它成立于1987年，是“交钥匙”项目的工程办公室。随着该领域的专家和技术专家的不断发展，公司不断发展壮大，为人们的福祉创造了创新的解决方案。
Bioforma Benessere Per Dormire Srl is an Italian company based in Ostuni(Br),which has been operating in the furniture industry for almost 20 years. It was founded in 1987 as en engineering office for "turnkey"projects.

THAI YENGTAI CO.LTD

6.1C2-10

Address: 泰国 清迈市-清迈市函东县伴塔工业区A Thailand Block A, banta industrial zone, haidong county, Chiang mai city, Thailand-Block A, banta industrial zone, haidong county, Chiang mai city, Thailand
Tel: 13488838888
Email: 1165226@qq.com
Web:

公司主营泰国手工艺品，希望能在中国找到更多的代理商，更好地合作。
The company is mainly engaged in Thai handicrafts, hoping to find more agents in China and better cooperation.

United Sino American Cultural and Business Center, Ltd.

6.1C2-13

Address: 美国 United States of America CA 91755-Monterey Park-502 Florence Ave.,
Tel: 62303682
Email: Chrisitan@astroman.com.cn Christian@astroman.com.cn
Web:

我司中美文化经贸中心从事文化创意设计，国际品牌推广授权的国际咨询，以及艺术衍生品，工艺品，轻奢消费品等的国际经贸业务。公司总部设立在美国，欧洲拥有设计公司和众多品牌公司保持高度紧密合作。
我公司旗下ASTROMAN爱依世家手工艺产品产自意大利佛罗伦萨。主要有水晶家居用品，24K水晶手工酒具，意大利手工瓷版画，手工皮鞋皮包等，并代理高级订制的意大利手工皮鞋皮具和欧洲红酒系列和美容产品。
United Sino American Cultural and Business Center is headquartered in the United States. We have close cooperation with design companies and many brand companies in Europe. Our company's ASTROMAN handicraft products are produced in Florence, Italy. The main products are crystal household goods, 24K crystal hand-made wine utensils, Italian hand-made porcelain prints, leather shoes & bags, etc.

ARSH INTERNATIONAL PROPRIETOR

6.1C2-17

Address: 巴基斯坦 卡拉奇-一楼，第115号店，全景中心，卡拉奇 Pakistan KARACHI-GROUND FLOOR, SHOP#115, PANORAMA CENTER, SADDER, KARACHI
Tel: +4399394-0
Email: 1165226@qq.com
Web:

公司主营巴基斯坦工艺品，手工艺品，希望能在中国找到更多的代理商，更好地合作。
The company is mainly engaged in Pakistani crafts, handicrafts, hoping to find more agents in China and better cooperation.

Xylo Group s.r.o

6.1C2-11

Address: 捷克 Czech Husitska 42, 13000 Praha 3, Czech republic
Tel: 15989429165
Email: Apple.Wong@hzcji.com
Web:

澳大利亚冠军羊毛被工厂 / Australia Champion Wool Factory

6.1C2-14

Address: 澳大利亚 维多利亚-DANDENONG SOUTH-148-150 BANGHOLME ROAD Australia VICTORIA-DANDENONG SOUTH-148-150 BANCHOLME ROAD
Tel: 021-68640118
Email: champion_iris@163.com
Web: www.championwool.com.au

澳大利亚冠军羊毛被工厂是当今澳大利亚大型高品质羊毛床品设计生产商之一。拥有全套世界一流水平的大型纺织生产流水线，从原料到产品的完成，由全自动数控化设备生产，保证所有的产品都拥有高度严格的统一质量标准。
Champion Wool Factory (CWF) from Melbourne, Australia, was established in 2011. It is a prominent local enterprise and a large-scale wool quilt manufacturer that integrates product development, design, production, marketing and other functions in-house. The factories are equipped with an extensive top of the line range of production facilities that fulfill global standards.

株式会社 WANG H.P / JAPAN WANG H.P CO.LTD

6.1C2-18

Address: 日本 东京-日本東京都北区田端1-15-13-101 Japan TOKYO-Rm 101, Tabata 1-15-13 Kitaku, TOKYO JAPAN
Tel: 81-9098529208
Email: wanghpco@yahoo.co.jp
Web:

本公司日本东京注册，成立于2009年8月，主要经营日本民间工艺品、漆器、茶道用品及现代个性饰品设计与创作。
The company was registered in Tokyo, Japan, and was established in August 2009.
We mainly deals with the design and creation of Japanese folk crafts, lacquer ware, tea ceremony supplies and modern personalized jewelry.

ITALY MKSA CO., LIMITED

6.1C3-01

Address: 香港地区 HongKong China Kowloon, Hongkong- Kowloon, Hongkong-Flat /RM A 9F silvercorp international tower 707-713 nathan road, mongkok, Kowloon,
Tel: 862151037510
Email: mskaglass@163.com
Web:

MKSA crystal - brings people a sence of tranquility and a balance between mordern noise life and their uneasy inner world, which also a reflection of people's taste cultivation needs, admiration for personal.

Leifheit AG

6.1C3-04

Address: 德国 拿骚镇-莱福海特大街1号 Germany Nassau-Leifheitstraße 1
Tel: 020-38780205
Email: guangzhong.long@leifheit-china.com
Web: www.leifheit.cn

60多年来，我们一直是欧洲领先的家居用品供应商之一。公司于1984年在德国上市，目前产品已行销世界80多个国家和地区，并在全球拥有超过15个分支机构。
我们专注于为消费者提供清洁、衣物晾晒、衣物熨烫和厨房工具等品类的家居用品。
We have been one of the leading providers of household products in Europe for over 60 years. We are a listed public limited company under German law since 1984. Now we ship our products to more than 80 countries worldwide and have more than 15 of our own sites and branch offices.
We focus on household goods in the areas cleaning, laundry care, and kitchen helpers.

JSC "Peteliskiu namai"

6.1C3-05(03)

Address: 立陶宛 Lithuania Vilnius-Pylimo g. 34-23
Tel: +37067810047
Email: info@denimdiaries.lt
Web: www.denimdiaries.lt

"Denim Diaries" is upcycling denim in various ways. We give new chance for unwanted denim - turn them into beautiful and useful products.

Makaliukas2

6.1C3-05(06)

Address: 立陶宛 Lithuania vilnius-balbieriškis-iaudutiškio g. 1
Tel: +37062911111
Email: ciaudutiskioMakaronas@gmail.com
Web:

storage room in the expo

Aida A/S

6.1C3-02

Address: 丹麦 Denmark Grenaavej 635 A 8541 Skoedstrup
Tel: + 86 20 8930 9656 / + 45 87490900
Email: tina@aida.dk
pmj@aida.dk
Web: www.aida.dk

aida创始于1953年，是一家专业设计，研发和生产陶瓷产品和各类礼品的丹麦公司。aida的设计深受丹麦悠长的历史和丰富的文化的熏陶和影响。几十年来，丹麦皇家亲王——丹麦女皇的丈夫对aida的设计有着浓厚的兴趣，并多次亲临aida家族企业进行参观。
aida is a Danish company from 1953 that designs, develops and produces porcelain and other gift items. aida is deeply rooted in the long Danish history and rich culture of Denmark。For decades His Royal Highness The Prince Consort – husband to Her Majesty The Queen of Denmark – has shown big interest in and visited the family business aida several times.

Gintaragis

6.1C3-05(01)

Address: 立陶宛 Lithuania Lithuania-Vilnius-Birzisku 121-2
Tel: 0037068627515
Email: info@amberleather.com
Web:

New design of bags

Ante Litteram

6.1C3-05(04)

Address: 立陶宛 Vilnius-Vilnius-Galvydzio 11A-42 Lithuania --Vilnius-Galvydzio 11A-42
Tel: +37067693825
Email: aivaras.zilvinskas@gmail.com
Web: www.ante-litteram.eu

工作领域：研究和教育，文化活动，可持续发展，国际商业。
Ante Litteram organises exhibitions, cultural events and helps to establish business relations on international markets for Lithuanian companies and artists, who work in the fields of design, art, cultural and creative industries, green economy, innovation.

Glaskoch B. KOCH JR. GMBH + Co. KG

6.1C3-03

Address: 德国 Germany Bad Driburg-Industriestraße 23 D-33014 Bad Driburg
Tel: 021-64812986
Email: andychenmail@aliyun.com
Web: www.leonardo-de.cn

诞生于1859年的俐傲纳朵LEONARDO，至今已有160年的历史，是德国著名的时尚玻璃制品和珠宝首饰品牌，在德国甚至欧洲市场中享有很高的声誉和市场占有率。
俐傲纳朵LEONARDO与世界著名设计师合作设计出许多新产品，获得了红点奖、IF等国际设计大奖，并于2019年和2016年获得德国“世纪品牌”称号。
据说，在德国，几乎每个家庭都拥有俐傲纳朵LEONARDO的产品。产品系列时尚绚丽。
The family business glaskoch was founded in 1859 and it is nowadays one of Europe's leading glass suppliers.
Today the company is managed in the 5th generation by Oliver Kleine and his wife Bianca Kleine.
The brand LEONARDO conveys the Italian sense of life.
We love glass – LEONARDO per sempre!
LEONARDO is Glasliebe.
LEONARDO is the glass for all opportunities and appeals to the senses.

JSC "Smagi spinta"

6.1C3-05(02)

Address: 立陶宛 Lithuania Vilnius-Stikli g. 6
Tel: +37062733328
Email: milda@lietuviskospeteliskes.lt
Web: www.dombowties.com

The first and the only one boutique in Lithuania, dedicated to handmade bow ties. From classy silk, wool and cotton bow ties to the ones, made of Lithuanian linen, wood or even concrete. We can help you fit a certain dress code or freely accentuate your character. Find a gift that inspires to look beautiful and celebrate life.

UAB Aromika

6.1C3-05(05)

Address: 立陶宛 Lithuania Kauno-Kaunas-T. Masiulio st. 18B, LT-52460
Tel: +370-687-79321
Email: evaldas.darguzas@aromika.lt
Web:

Aromika UAB have 15 years experience in manufacturing cosmetics and fragrances. Our products are for people, homes and cars.

UAB "BALTIC-FLAX"

6.1C3-05(07)

Address: 立陶宛 Lithuania Vilnius-Algirdo g. 40 C
Tel: +37062177305
Email: aurelija@baltic-flax.com
Web: www.baltic-flax.com

Baltic Flax is a family-owned business operating for more than 25 years.
Today we create and manufacture private label home textiles and garments collections for small and medium companies and stores. Also we have our wonderful linen tales collection.

Joseph Joseph Ltd

6.1C3-06

Address: 英国 United Kingdom London-100 Union Street, London SE1 0NL
Tel: 13120896696
Email: jason.wang@josephjoseph.com
Web: www.josephjoseph.com

Joseph Joseph由双胞胎兄弟Antony和Richard Joseph于2003创立，一个以家居用品为主的设计品牌。产品主要为厨房用品，卫浴产品，以及分类垃圾桶。经过16年的发展，公司已经成长为一个屡获殊荣的国际家居品牌，产品在全球100多个国家销售，在伦敦，上海，纽约，巴黎，杜塞尔多夫和东京设有办事处。
Joseph Joseph was established in 2003 by twin brothers, Antony and Richard Joseph, focusing on the design and production of creative kitchenwares. After continues growth of 16 years, the company has extended the product line to other houseware category, like bathroom, waste and recycling bins, etc. Joseph Joseph has expanded the business to over 110 countries.

PASABAHCE CAM SAN. VE TIC.A.S

6.1C4-02

Address: 土耳其 伊斯坦布尔-图兹拉-SISECAM GENEL MEKEZI,ICMELER MH. D-100 KARAYOLU CAD 34947 Turkey ISTANBUL-TUZLA-SISECAM GENEL MEKEZI,ICMELER MH. D-100 KARAYOLU CAD 34947
Tel: 021-80198176
Email: philson.fei@pasabahcechina.com
philson.fei@pasachina.com
Web: www.pasabahce.com

土耳其帕莎帕琦玻璃器皿有限公司是全球领先的玻璃器皿制造企业，在全球4个国家设有6个工厂。公司目前全球有超过6500名员工，超过2万个产品，出口140多个国家，年销售额高达6亿美金。分别在美国，德国，意大利，西班牙，俄罗斯，埃及和中国设有分公司。

A.Juknos studija "A+L"

6.1C3-05(08)

Address: 立陶宛 Lithuania Klaipeda-Klaipeda-Medziotoju 8-5
Tel: 0037063007097
Email: info@mooseamber.com
Web: www.mooseamber.com

Unique accessories from leather, antlers.

株式会社DOSHISHA / DOSHISHA CORPORATION

6.1C3-07

Address: 日本 东京-品川区-东大井1-8-10 Japan TOKYO-SHINAGAWA-KU-1-8-10,HIGASHIOI
Tel: 0081-3-3474-7281
Email: lu-yan@doshisha.co.jp
Web: www.doshisha.co.jp

Doshisha是一家日本的上市制造商和贸易公司，主要企划，开发和销售与人们各种生活相关的产品和服务。
Doshisha is a manufacturer and a trading company that plans, develops, and sells products and services related to people's various lives.

廷亦集团控股有限公司 / Ting Yi Group Holdings Limited

6.1C4-03

Address: 香港地区 香港岛西区上环干诺道西3号亿利商业大厦21楼A . E & F办公室 Hong Kong OFFICES A, E&F 21/F YARDLEY COMM BLDG 3 CONNAUGHT RD WEST SHEUNG WAN HONG KONG
Tel: 13120885688
Email: 2584840509@qq.com
Web: fossflakes.tmall.com

廷亦集团控股有限公司是一家高端家居品牌集合公司，主推寝具和家居产品，公司主要做品牌推广批发及零售为一体。
Tingyi Group Holdings Co., Ltd. is a high-end home brand collection company, which mainly promotes bedding and household products. The company mainly engages in brand promotion, wholesale and retail.

BALTMAX UAB

6.1C3-05(09)

Address: 立陶宛 Lithuania VILNIUS-Vytenio st. 5-18
Tel: +37061623839
Email: gasparas@baltmax.eu
Web: www.royaldream.eu

台塑企业 / FPG

6.1C4-01

Address: 台湾地区 Taiwan China-台北市-松山区敦化北路201号 Taiwan Taiwan-Taipei-201 Tun Hwa North Road
Tel: +886 2-27122211 #596 / +886-2-27122211#5966
Email: louisdesign55@gmail.com
Web: www.fpg.com.tw/tw

1954年，王永庆及王永在兄弟白手起家，成立「台塑企业」，目前共有台塑、南亚、台化、台塑石化、台塑河静钢铁及关係企业共100余家，跨足的产业涵盖炼油、石化、塑胶、纤维、纺织、电子、能源、运输、机械、炼钢、医疗、生物科技等多元领域，以及医疗、教育等非营利事业，凡事均以「勤劳朴实，止于至善，奉献社会，永续经营」为理念，深耕半世纪迄今，全球员工总人数超过11万人，在重要经营领域达到领先地位。
FPG has been established for more than 60 years, with more than 100 affiliated companies with plants in China, USA, and Vietnam. Our business fields range from oil refinery, petrochemical plastic raw materials, plastic reprocessing, fibers & textiles, electronic/semiconductor materials, etc. The Group strives in social welfare and has established several educational and medical institution.

PT. Purinusa Ekapersada

6.1C5-01

Address: 印度尼西亚 Indonesia No. 51 Central Jakarta-9th Floor, Jalan M.H. Thamin,-Sinarmas Land Plaza Tower 1
Tel: 21-22939637
Email: lishaoyong@app.com.cn
Web: www.app.com.cn

APP（Asia Pulp & Paper Co., Ltd，简称APP）是印尼爱国华侨黄奕聪先生创办的家族企业——金光集团的核心产业，是全球最大的浆纸产业集团。我们致力于提供各类优质产品以满足全球用户对于生活用纸、包装用纸、文化用纸以及其他纸制品的不断增长的需求。
As the core business sector of Sinar Mas Group, Asia Pulp & Paper (APP) is one of the world's largest pulp and paper companies, APP is responsible for delivering quality products to meet the growing global demand for tissue, packaging and paper.

King Koil Licensing Company. Inc

6.1C5-02

Address: 美国 United States of America IL-WILLOWBROOK- 7501 S. QUINCY ST, SUITE 135
Tel: 021-60851250
Email: elainebu@kingkoil.com.cn
Web: www.kingkoil.com.cn

金可儿(King Koil)作为全球著名的健康床具品牌和数以千计的豪华酒店理想床具品牌，始创于美国1898年美国明尼苏达州的圣保罗市，塞缪尔先生（Samuel Bronstien）与他的七位雇员携手创立了King Koil 金可儿—这个百年夺目享誉世界的品牌。一个多世纪，全世界有超过4500万个家庭正在使用金可儿产品，并以拥有金可儿而感到骄傲。
Founded in 1989, KINGKOIL has over a century of experience crafting high quality mattress throughout the world. We take great pride in our engineering, designing each mattress to provide comfort, durability, and exceptional value.

Serta Inc.

6.1C5-03

Address: 美国 United States of America Illinois-Chicago-666 North Lake Shore Drive,Suite 1507
Tel: 0755-28740419
Email: fayette@serta.cn
Web: www.serta.cn

Serta, 88 years of focus on sleeping, possessing three core technologies. As the sole certified brand of National Sleep Foundation, it has won the throne of No. 1 American mattress brand for 8 years in row.Till now, Serta has 52 factories and 108 international authorized dealers worldwide, serving 192 countries and areas with high-quality sleeping solutions.

Madad. Pty.Ltd

6.1C5-04

Address: 澳大利亚 Australia QLD-WOCAL-1299 Boundary Road
Tel: 15121088545
Email: sarahzhao@sealy.cn
Web:

溯源于1881年美国德克萨斯州休斯顿郊外的丝涟”小镇，并作为全球享誉的床垫制造商，历经百余年的发展在全世界超过80多个国家和地区经营业务，拥有近万的零售店。每一个夜晚,全球都有超过数亿的用户享受着丝涟所带来的优质睡眠。在品牌创立的百余年来始终为顾客提供承托力，舒适度和耐用性和谐统一。
As the world-renowned mattress brand, Sealy with century-old history adheres to its core technology of Posturepedic and brings the mattress products integrating "support, comfort and durability" to the consumers all over the world, with the purpose of helping consumers to shaping good posture during sleeping.

Kanpura s.r.o.

6.1C5-05

Address: 捷克 Czech Opletalova 1417/25 11000 Praha 1- CZ
Tel: 13917246536
Email: eleonora1834@foxmail.com
Web:

捷克卡普拉公司是捷克著名的捷克水晶玻璃制造和贸易公司，拥有的水晶玻璃生产基地已具有百年的生产历史。卡普拉公司出品的水晶制品具有高品质的保证，其产品远销世界各地。卡普拉公司生产：水晶酒杯，花瓶，餐具，果盘，烟灰缸，水晶吊灯，现代吊灯，落地灯，水晶玻璃雕塑及其它水晶玻璃装饰品等。公司主要品牌有：“Eleonora Crystal 1834，Iris”等。
KANPURA S.R.O. is a Czech Republic crystal glass manufacturing and trading company. The crystal products produced by KANPURA S.R.O. are of high quality and are sold all over the world. KANPURA S.R.O. produces: crystal wine glasses, vases, cutlery, fruit bowls, ashtrays, crystal chandeliers, other crystal glass decorations, etc. The company's main brands include: "Eleonora crystal 1834, Iris" .

maholi inc

6.1C5-06

Address: 加拿大 Canada Ontario-Toronto-42 Hollinger Rd.
Tel: 1-416-598-8965
Email: allen@maholi.com
Web: www.maholi.com

公司成立于1994 年，专业生产高档床上用品，羽绒制品。工厂位于加拿大经济中心城市多伦多，是加拿大羽绒协会会员。产品畅销北美市场。
A well know down products manufacturer, established in 1994 at Toronto, Canada. The products be sold at Major chains and specialty stores in North American and also be exported to world widely . The company also is a member of Down association of Canada .

瓦克化学股份有限公司 / Wacker Chemie AG

6.1C6-01

Address: 德国 巴伐利亚-慕尼黑-Hauptverwaltung Hanns-Seidel-Platz 4 Germany Bavaria-Munich-Hauptverwaltung, Hanns-Seidel-Platz 4, 81737
Tel: +86 21 6130 2412
Email: june.tian@wacker.com
Web: www.wacker.com

瓦克是一家1914年成立，总部位于德国慕尼黑市的全球性化学品公司。瓦克集团凭借其种类丰富、技术含量高的专业产品，在众多行业和工业分支中占有领先地位，产品广泛应用于建筑施工、涂料、光伏、电子产品、医药及护理品等各类发展迅速的终端消费行业。
Founded in 1914, WACKER is a globally active chemical group headquartered in Munich, Germany. With a wide range of state-of-the-art specialty products, WACKER is a leader in numerous fields and industries. Its products are required in countless high-growth end-user sectors, such as construction, painting, photovoltaics, electronics, pharmaceuticals and household/personal-care products.

RIGAS LAKU UN KRASU RUPNICA

6.1C6-02

Address: 拉脱维亚 Latvia Daugavgrivas Street 63/65, Riga LV-1007, Latvia
Tel: 010-67814297 / 01067814297
Email: zhangkerilakhm@163.com
Web: www.rilakmp.com

里加油漆涂料工厂是欧洲著名的拥有百年历史的涂料企业，位于欧洲拉脱维亚首都里加，是波罗的海国家最大的油漆和清漆制造商。
RIGAS LAKU UN KRASU RUPNICA is a well-known European paint company with a history of more than 100 years. It is located in Riga, Latvia, Europe. It is the largest paint and varnish manufacturer in the Baltic countries.

Roviva Roth & Cie AG

6.1C6-03

Address: 瑞士 Switzerland Scheweiz-Wangen a/Aare-Matratzen-und Bettenfabrik CH-3380
Tel: 010-68726370 / 0041-0-326311222
Email: 1215436488@qq.com roviva@roviva.ch
Web: www.roviva.ch

拥有270年历史的专业生产辅助睡眠的床垫瑞士制造商。
A Swiss manufacturer specialized in premium mattress since 1748

远急日本株式会社 / Ehkyu Japan co.,Ltd

6.1C6-04

Address: 日本 东京都-丰岛区-南池袋2-49-7 池袋公园大厦1层 Japan Tokyo-Toshima-ku-South ikebukuro 2-49-7, 1st floor, ikebukuro park building
Tel: 021-62890790 / +86-021-62890790
Email: zhangyuan@ehkyu.com
Web:

ranKing ranQueen 是日本一家药妆店品牌，以人气排行榜为主要贩卖形式，通过日本各大百货店、公信榜等销售数据的分析，提供最新流行商品资讯的精品店铺及线上商城。在提供各品类销售排名前5的商品同时，也推荐最具销售潜力的商品。
EHKYU JAPAN is the exclusive authorized partner of ranKing ranQueen in China. RanKing ranQueen, a subsidiary to Tokyo Corporation, is renowned in its cosmeceutical products. At present, we mainly cooperate with TOKYU HANDS, ranKing ranQueen and other popular Japanese brands for daily necessities, to engage in wholesale and retail business of of Japanese food and daily groceries.

Wool Products Australia Pty Ltd

6.1C6-05

Address: 澳大利亚 Australia New South Wales 2565-INGLEBURN-6 Shaw Road
Tel: 13761200035
Email: bolin@shanghaiautex.com
Web: www.woolstar.com.au

澳大利亚羊毛用品有限公司，Wool Products Australia Pty Ltd（简称WPA），是澳洲知名羊毛用品公司，创立于1996年，位于澳洲新南威尔士州。企业专注高端羊毛这一细分领域，坚持做澳洲原创精制羊毛产品，纯澳洲加工制造，采用精选澳洲唐斯羊绒毛、美丽奴羊绒毛经高科技处理和全棉高支高密全精梳面料精制而成。
Wool Products Australia Pty Ltd is an Australian owned company based in Sydney. We are leading manufacturer of woollen products using 100% Australian premium wool under brand "Woolstar". With over 20 years experience, knowledge and workmanship with a range of state of the art machinery ranging from fibre carding and cross lappers to automated cutters & quilting machines.

多鲁布·阿尔萨拉马有限公司 / DOROOB ALSALAMA COMPANY LTD.

6.1C6-08

Address: 利比亚 米苏拉塔-艾克拉斯大街,萨纳穆希达利街 Libya Misrata-Al-Ekhlas street, off sanaa muhidali street.
Tel: +218 51 5201917
Email: 1165226@qq.com
Web:

公司主营手工艺品，生产，加工，制造，希望来中国找到更多生意机会。
The company mainly deals in handicrafts, production, processing, manufacturing, hoping to come to China to find more business opportunities.

四国繊維販売株式会社 / SHIKOKUSENIHANBAI.CO.,LTD

6.1C6-11

Address: 日本 香川県-高松市-香川町大野2134-6 Japan kagawaken-takamatsushi-kagawamati2134-6
Tel: 17602183365
Email: siguobutuan@163.com
Web: www.shikokuseni.co.jp

四国纤维贩卖株式会社公司位于香川県高松市香川町，成立于1966年，是日本最大寝具制造工厂，年销售额45亿日元（占全日本寝具市场30%左右的规模）。
公司主营寝具用品，如今四国纤维寝具产品遍布日本，其羽绒被制作符合行业的最高标准。最终客户包括：伊藤洋华堂、日生协、西川、永旺、富士各大零售店等大型家居用品零售商户。
SHIKOKU SENI HANBAI Co., Ltd. is located in Shirakawa, Kaohumashi, Xiangchuan City. Founded in 1966, Shiguo Fiber Trading Co., Ltd. is the largest bedding manufacturer in Japan, with annual sales of 4.5 billion yen (accounting for about 30% of the bedding market in Japan).

MIG AUSTRALIA PTY LTD

6.1C6-06

Address: 澳大利亚 Australia 5 JOYNER STREET. MOORABBIN, VICTORIA 3189
Tel: 021-61816060
Email: larryli@ebls.cn
Web:

golden quilts

布拉达兰国际贸易有限公司 / Bradaran Masood Zamir LTD

6.1C6-09

Address: 阿富汗 喀布尔-阿富汗喀布尔 Afghanistan Kabul-Koch 's-e- Morgha, Shahr-e-now, Kabul , Afghanistan
Tel: +93 70 674 8914
Email: 1165226@qq.com
Web:

The Bradaran Masood Zamir LTD established on 2013 for trading services, Export and Import for improvement of national Economy, Marketing for exportable commodities and manufactured products, Strengthen relations with world companies and countries.

TEXTILE GALLERY CO.,LTD. / TEXTILE GALLERY CO.,LTD. (PASAYA)

6.1C6-12

Address: 泰国 Thailand BANGKOK-BANGKOK-77/191-192 SINNSATHORN TOWER, 42ND FLOOR KRUNGDHONBURI ROAD, KLONGTONSAI, KLONGSARN
Tel: 66-2-440-0955
Email: seefha@qq.com
Web: www.pasaya.com

PASAYA is a brand of Green textile products for living lifestyle and personal adornment. The brand was invented with a belief in mind that the pleasure of living can be enlivened by "A Passion for life". Thus the core philosophy of PASAYA is to create products for enhancing the passion of each individual, and the quality of life & environment.

Mayeri Industries AS

6.1C6-14(02)

Address: 爱沙尼亚 Estonia Tartu County-Tabivere-Tabivere
Tel: +3725204515
Email: piia@mayeri.eu
Web:

Mayeri Industries is the largest manufacturer of washing and cleaning products in the Baltic states. Main target market for our products is the Northern Europe. Products of Mayeri are nature friendly, harmless to humans and wildlife, and sustainable for fabrics and surfaces to be cleaned, but they are effective, in order to get the job done.

伊曼瑞·YMR株式会社

6.1C6-07

Address: 日本 Japan 新宿区高田马场1-31-8-东京都-日本
Tel: 13819825511
Email: ailou7446@vip.163.com
Web: nbkivicow.1688.com

YMR is a Japanese trading company engaged in general trade or cross-border products and currently has an Imabari license and some exclusive products. The company is conveniently located in the heart of Tokyo. Being able to quickly perceive the needs of the Chinese market and strive to provide the highest quality products at competitive prices.

Mundotextil Industrias Texteis S. A.

6.1C6-10

Address: 葡萄牙 Vizela-Rua da Saudade, 280-400 S. João，4815-901 Vizela Portugal Rua da Saudade, 280-400 S. João，4815-901 Vizela
Tel: 021-57656800
Email: james@ly-living.com
Web: www.mundotextil.pt

源自葡萄牙的Blank Home品牌，秉承欧洲的设计风格，坚持品质的苛刻追求，精选最好的原材料，为中国市场呈现了一场浴室用纺织品的饕餮盛宴。
BLANK HOME FEATURES A LIFESTYLE HOME COLLECTION, USING ONLY THE FINEST MATERIALS AND TIMELESS DESIGNS FOR CLASSIC TERRY TOWELS AND BATH ROBES, HANDMADE ACCESSORIES, NATURAL FRAGRANCES AND PREMIUM BEDLINEN.

KOKUBO & CO.,LTD.

6.1C6-13

Address: 日本 Japan Wakayama-Kainan-201-9 Nokamishin
Tel: +81352051811
Email: y-nagano@kokubo.co.jp
Web: kokubo&co.,ltd.

We are a Japanese leading manufacturer of household and miscellaneous products aiming to make various aspects of everyday life, such as cooking, cleaning and laundry, easier and more enjoyable. Through the craftsmanship of our manufacturing process, we endeavor to enhance our customers' enjoyment of their daily lives.

Top Connect

6.1C6-14(03)

Address: 爱沙尼亚 Estonia 11415 -Tallinn-Vaike-Paala 1
Tel: +372 622 6475
Email: ales.kahanek@topconnect.com
Web: www.topconnect.com

Top Connect is one of the world's leading alternative roaming service providers. Our products include affordable global mobile connections and management solutions for B2C, B2B and IoT connectivity. Top Connect is a fully licensed MVNO and we provide Sponsored Roaming and e-Profile solutions for various service providers.

Rupa & Company Limited

6.1C7-01(07)

Address: 印度 India Kolkata -700071-west Bengal-1 Ho Chi Minh Sarani, Metro Towers
Tel: 033-40573190
Email: export@macroworld.in
Web: macroworld.in

Rupa & Company Limited is country's one of the largest manufacturer of hosiery & innerwear brand with premium offerings from Macroman M-Series & Macrowoman W-Series in Innerwear, Sportswear, Athleisure & Thermal of International quality standards at competitive pricing. Recently Macroman M-Series is honored with Prestigious Brands of Asia Awards 2019 at Malaysia. Our brand philosophy is LIVE OPEN

Atiya Exports

6.1C7-01(15)

Address: 印度 India UTTER PARDESH-SAHARANPUR-12/1965 purani mandi
Tel: 0091132246418
Email: ATIYAENTERPRISES@GMAIL.COM
Web:

Abu Fazal Exports

6.1C7-01(18)

Address: 印度 India UTTER PARDESH-SAHARANPUR-Vardhman Colony Chikana Road Near mandi Samiti
Tel: 0091132246418
Email: mrenterprises84@gmail.com
Web:

CASHMERE ROYAL WEAVES

6.1C7-01(04)

Address: 印度 India JAMMU AND KASHMIR-SRINAGAR-UMER COLONY A NEAR VISION SCHOOL LAL BAZAR
Tel: 00919910297447
Email: cashmereroyalweaves@gmail.com
Web: www.cashmereroyalweaves.com

Cashmere Royal Weaves is a premium luxury brand which deals with 100% genuine Hand-Spun Cashmere Pashmina Shawls, Stoles and Scraves. Being in the business of manufacturing Cashmere products for over 100 years our company has a versatile range of designs ranging from antique to modern with our innovation team constantly updating our designs and colours to meet the need of changing fashion market.

FAROOQI GROUPS

6.1C7-01(09)

Address: 印度 India JAMMU AND KASHMIR-KARAN NAGAR-3RD FLOOR HABIB COMPLEX
Tel: 15121004439
Email: 448996554@qq.com
Web:

Indian Arts & crafts / INDIAN ARTS & HANDICRAFTS

6.1C7-01(16)

Address: 印度 UTTER PARDESH-SAHARANPUR-Gali No.4 Sabri ka Bagh Gotey Shah ki Chungi India UTTER PARDESH-SAHARANPUR-12/2047 SARAI FAIZ ALI PURANI MANDI
Tel: 0091132246487 / 0091132246496
Email: sahersaud@gmail.com saud.sahir@gmail.com
Web:

SUDHA INDIA INTERNATIONAL

6.1C7-01(21)

Address: 印度 India DELHI-DELHI-F-126 RAJOURI GARDEN
Tel: 42138383
Email: sudhaindiaintl@yahoo.com
Web:

We are regular exporters of indian handmade wooden furniture, handicrafts and brass items to Russia, China, Chile, Peru , Azerbaijaan. We are in this business for the past 25 years.

Craft World Handloom

6.1C7-01(06)

Address: 印度 India Kashmir-Sri Nagar-Rathpora New Colony Eidgah
Tel: 00911123268323
Email: sahir17@rediffmail.com
Web:

Sara Expots

6.1C7-01(12)

Address: 印度 India UTTER PARDESH-SAHARANPUR-11/2303 LAKHI GATE 1st
Tel: 8700180735
Email: ATIYAENTERPRISES@GMAIL.COM
Web:

WE ARE THE MANUFACTURER AND EXPORTS OF INDIAN WOODEN FURNITURE AND ARTWARE

Indian Arts & crafts

6.1C7-01(14)

Address: 印度 India UTTER PARDESH-SAHARANPUR-Gali No.4 Sabri ka Bagh Gotey Shah ki Chungi
Tel: 00911123268323
Email: mrglobalind@gmail.com
Web:

father & sons Inc

6.1C7-01(17)

Address: 印度 India UTTER PARDESH-SAHARANPUR-old eidgah road near fountain
Tel: 0091132246418
Email: sahirwebmaster@gmail.com
Web:

JALLA OVERSEAS INC

6.1C7-01(24)

Address: 印度 India Delhi-NEW DELHI-32/200, BASEMENT, VIKRAM VIHAR, LAJPAT NAGAR 4, 07ACQPD2714E1ZX
Tel: +911146548488
Email: 7bilaldar@gmail.com
Web:

JALA ARTS & CRAFTS

6.1C7-01(25)

Address: 印度 India DELHI-NEW DELHI-32/200, VIKRAM VIHAR, LAJPAT NAGAR IV
Tel: +911146548488
Email: jallagroup@gmail.com
Web:

CMT ARTS (INDIA) PVT LTD

6.1C7-01(35)

Address: 印度 India RAJASTHAN-JAIPUR-"SAI-VILLA", PLOT -39, MISSION COMPOUND, NEAR AJMER PULIYA
Tel: +911414041561
Email: cmtartsindia@gmail.com
Web: www.sandalwood.cn.com

We, CMT ARTS are the leading manufacturer and exporter of Indian Sandalwood handicrafts and incense. We manufacture large range of Buddha, Mala, Incense and other Buddhist items. We use high quality authenticated Indian Sandalwood (Yindu tan Xiang)

TRENDS INDIA

6.1C7-01(38)

Address: 印度 India Delhi-Delhi-117 L.S.C. Pkt D & E, Sarita Vihar, Delhi 110076, India.
Tel: 00919968415208
Email: TrendsIndia.Mail@Gmail.Com
Web: www.trendsindia.shop

Indian Silks, Gemstones & Jewellery.

prince trading company

6.1C7-01(41)

Address: 印度 India uttar pradesh-saharanpur-36 nadeem coloney eid gha road
Tel: +8613156367851
Email: princetco@gmail.com
Web: www.princetco.com

manufacturare and exporter of handicrafts

ASG LEATHER PRIVATE LIMITED

6.1C7-01(43)

Address: 印度 India West Bengal-Kolkata-Plot No. 903 A & B, Zone-10, Kolkata Leather Complex, Bantala
Tel: 091 33 3221 6684
Email: info@asgleather.com
Web: www.asgleather.com

Achal Impex Inc

6.1C7-01(26)

Address: 印度 India Haryana-Faridabad-93, Rajiv Nagar, Sector 18
Tel: +91 9810133793
Email: info@henna.in
Web: www.henna.in

We are one of the oldest & biggest manufacturers & exporters of Henna Powders and Henna based Hair Colors from India. Our family is in Henna Exports since 1955. Our range includes Henna in different colors such as Black, Brown, Dark Brown, Chestnut, Burgundy, Mahogany, Golden Brown, Instant Red Orange etc and for Tattoos. We are a GMP & ISO certified company. We export to more than 20 countries.

J. I. INTERNATIONAL

6.1C7-01(36)

Address: 印度 India JAMMU AND KASHMIR-SRINAGAR-SRINAGAR
Tel: 00919871953370
Email: wani@wani.co.in
Web: www.wani.co.in

J.I. International is a Government of India recognized star Export House which deals with Hand Made Kashmir Silk carpets and Modern rugs. J.I. International is the highest exporter of Hand-made Kashmir Silk Carpets for 2 consecutive years and has been awarded by the Government of India. We generate employment for the artisans and provides the world quality Kashmir Silk Carpets under the logo Wani

Chinar Handicraft &Handloom Export company

6.1C7-01(39)

Address: 印度 India Delhi-New Delhi-C-35, 2nd Floor, Lajpat Nagar, Part -2
Tel: 26881033
Email: chinarhandicrats@yahoo.com
Web:

Manufacturing of Handicrafts & Handlooms

Unique Overseas Exports

6.1C7-01(44)

Address: 印度 India Delhi-New Delhi-108A, Hazrat Nizamuddin
Tel: +919811119086
Email: ahmed49uoe@yahoo.com
Web:

A leading Manufacturer and Exporter of Indian Artistic Furniture and Handicrafts. Having strong presence in North Africa and South America

BHAVYA INTERNATIONAL

6.1C7-01(30)

Address: 印度 India MAHARASHTRA-MUMBAI 400002-17/21, DR. A. M. ROAD, BHONABHAI CHAWL, BHULESHWAR
Tel: +919833573904
Email: DHAVAL@SHREEVALLABHMETALS.COM
Web: www.shreevallabhmetals.com

BABACO HOME TEXTILE PVT LTD

6.1C7-01(37)

Address: 印度 India DELHI-NEW DELHI-F 160 LAJPAT NAGAR PART 1
Tel: 00919811765574
Email: ji.international@yahoo.com
Web: www.wani.co.in

BABACO HOME TEXTILE PVT LTD DEALS WITH EXCLUSIVE HOME FURNISHING PRODUCTS MEETING THE DEMANDS OF BOTH LUXURY AND MASS PRODUCTION MARKETS. WE HAVE A DEDICATED R&D TEAM WHICH CONTINUOUSLY WORKS TO BRING FORTH INNOVATION DESIGNS IN HOME FURNISHING. OUR PRODUCTS FULFIL ALL INTERNATIONAL SAFETY PARAMETERS. WE ARE WORLDWIDE EXPORTERS OF HOME FURNISHING.

magic touch accessories

6.1C7-01(40)

Address: 印度 India Maharashtra-Thane-503, Heeradeep society, Mental hospital road
Tel: 0000000
Email: magictouchth@gmail.com
Web:

Amina Enterprise

6.1C7-01(46)

Address: 印度 India Uttar Pradesh-Saharanpur-12/1201A, Eid Gah Road, Green Park, Saharanpur, UP - 247001
Tel: 9897279431
Email: aminaent@gmail.com
Web:

FAIR AND MORE INC.

6.1C7-01(47)

Address: 印度 Delhi-New Delhi-297, 2nd Floor, Street Sujan Rai, Delhi Gate India Delhi-New Delhi-297, 2nd Floor, Street Sujan Rai, Delhi Gate, Delhi-110002
Tel: 9899339339
Email: fairandmore@gmail.com
Web:

Dushanbe Waheda Tajik Hua Shi Tai

6.1C7-04

Address: 塔吉克斯坦 Tajikistan Dushanbe, waheda districk, no2 dousidamat
Tel: 989090606
Email: 632010027@qq.com
Web:

The purpose of the company, let the motherland of goods to the world Our company designs and handcrafts such as silver ornaments, silver pot, lapis lazuli and so on.The purpose of the company, let the motherland of goods to the world.

Warmipura Arte Exportaciones S.A.C / Warmipura Arte Exportaciones S.A.C

6.1C7-07

Address: 秘鲁 Arequipa-Arequipa-Arequipa Peru Arequipa
Tel: 021-56070807
Email: liujiaoe@warmpaca.com mayuxia@warmpaca.com
Web: www.warmpaca.com

我公司采用秘鲁高原的羊驼毛原料，设计生产各种羊驼毛玩偶摆件及毛毯，盖毯等家居用品，同时开发了皮毛一体的服装，拖鞋等配饰类产品，和当地村民合作生产加工，为当地村民增加收入的同时，把温暖的羊驼毛产品带到中国市场！
we are located in Arequipa, Peru. we are factory of alpaca products, like toys, blanket, cloth,duvet etc. we only use the best baby alpaca material to make the best quality products.

sarim co international

6.1C7-12

Address: 巴基斯坦 Pakistan Sindh-karachi-A 92
Tel: 00923128535981
Email: shahhasan22@gmail.com
Web:

Salaam Enterprises

6.1C7-01(48)

Address: 印度 Delhi-New Delhi-297, 2nd Floor, Street Sujan Rai, Delhi Gate India Delhi-New Delhi-297, 2nd Floor, Street Sujan Rai, Delhi Gate, Delhi-110002
Tel: 9711105550
Email: atifmalik999@gmail.com salaamenterprises786@gmail.com
Web:

Nordic Explorer AS

6.1C7-05

Address: 挪威 Norge-Oslo-Hovinveien 3B Norway Norway-Oslo-Hovinveien 3B
Tel: +4794104224
Email: alex8452@gmail.com
Web: nordicexploreras

Nordic Explorer AS is the general agency of Norwegian wool garment manufacturer Janusfabrikken AS (JANUS) for the Chinese market.

利德成集团 / Liz Fashion Industry Limited

6.1C7-08

Address: 孟加拉国 Gazipur-Koliakoir-Building 2, Holding 1, Block C, Shaheed Mosharaf Hossain Road, Purbo Chandora, Shafipur Bangladesh Gazipur-Sofipur, Kaliakoir,-Building 2, Holding 1, Block C, Shaheed Mosharaf Hossain Road, Purbo Chandora,
Tel: +88028417601
Email: olivia.qu@lizfashion.com
Web: lizfashion.com

利德成集团是一家大型现代化中资纺织服装企业集团,创建于1997年,位于世界第二大服装出口国-孟加拉国。集团拥有织造、印染、制衣等纵向一体化生产供应链，采用现代化生产技术与装备，以一万八千余名技术熟练、勤奋敬业的员工为依托，为众多国际知名服装品牌提供优质产品与服务，产品出口中国、欧洲、北美、澳洲等地，为“一带一路”在孟加拉国的延伸做出积极贡献。
Founded in 1997，Liz Fashion Industry Limited is a leading Chinese textile and apparel manufacturer in Bangladesh – the second largest apparel exporting country in the world. Equipped with modern technology and facilities, manned by a 18000-strong well-trained workforce, Liz Fashion provides high-quality products and services for renowned fashion brands around the world.

Indus Marble

6.1C7-13

Address: 巴基斯坦 Pakistan Sindh-Karachi-Karachi, Sindh, Pakistan
Tel: 0092321722035
Email: naseer.ahmed@tdap.gov.pk
Web:

Leading Manufacturer and suppliers of Brass handicrafts

Renova S.A.

6.1C7-02

Address: 葡萄牙 Portugal Torres Novas-Torres Novas-Renova-Fab.De Papel Do Almonda,S.A.Zibreira 2354-001
Tel: 00351 249 830 200
Email: Ricardo.Figueiredo@renova.pt
Web:

Started in 1939, Renova is a luxury paper towel in the fashion circle, a national treasure of Portugal, and a display in the Louvre museum in France. Its paper has the following advantages: First, 100% original wood pulp, good water and oil absorption performance, no portable fluorescent agent or bleach agent; Second, food grade dyes, high color fastness so will not appear in the case of fading;

Liberian Business Association

6.1C7-06

Address: 利比里亚 Liberia Monrovia Liberia
Tel: 00231886811029
Email: libaliberia@yahoo.com
Web:

Shardana Must srls

6.1C7-09

Address: 意大利 Italy Italy-Cagliari-via puccini 1/b
Tel: 0039070400873
Email: info@mustofitaly.com
Web: www.mustofitaly.com

"Must of Italy" offers luxury Made in Italy products, household items for interior furnishing sector, gift items fine handicraft: leather, ceramic, porcelain, silver, gold filigree, crystal and glass, furniture, bronze sculptures.

Al Hamra Handicrafts

6.1C7-11

Address: 巴基斯坦 Pakistan Sindh-Karachi-DHA Phase 2
Tel: 0092321722035
Email: naseer.ahmed@tdap.gov.pk
Web:

We are the pioneer of manufacturing quality handicrafts and salt lamps. We have the experience of exporting our quality products from Pakistan to globe for many years.

ANSARIBROTHERS1

6.1C7-14

Address: 巴基斯坦 Pakistan SINDH-KARACHI-A-19, ALAMGIR RAYON MILLS S I T E
Tel: 0092 21 32565407
Email: osma0909@hotmail.com
Web:

Ansari Brothers was established in 2001, now we are the one of largest exporter of Marble and stone, already we are exporting to UK, Bulgeria, Poland , Brazil China and others countries, we can provide the bill of leading of our shipments up on request, about this event our some client of china will already invited hopefully we will got some more buyer from Chinese and other countries.

Tajik Hua Shi Tai-1

6.1C7-17

Address: 塔吉克斯坦 Tajikistan Harouri, sarakesh street, rudaki district, dushanbe city
Tel: 00992933500585
Email: 632010027@qq.com
Web:

The purpose of the company, let the motherland of goods to the world

發現國際有限公司 / FA XIAN INTERNATION CO.,LTD

6.1C7-21

Address: 台湾地区-新北市- 新北市鶯歌區福德二街21號5樓 Taiwan TIAWAN-New Taipei City- 5th Floor, No.21 Fude 2nd Street, Yingge District, New Taipei City
Tel: 02-26782227
Email: clever0055@hotmail.com
Web:

發現國際於2014年獲得 MIT微笑標章目前在台灣地区銷售外，2015年到海外擴點,,希望將具有台灣文創特色用品,推廣至世界各地。
FA XIAN internation co.,ltd in 2014 MIT smile mark, currently in addition to sales in Taiwan Region, began to expand overseas in 2015, hoping to have Taiwan's cultural and creative characteristics Supplies,promoted to all parts of the world.

泰国邦迪普莱斯有限公司 / Brand Diplex Co., Ltd.

6.1C8-03

Address: 泰国 Thailand Chiang Mai-199/103 moo.4 T.tasala A.Muang.
Tel: +66-850303358
Email: info@asean-china.org
Web:

泰国Diplex公司是一家集床上用品销售公司。主要产品包括天然乳胶枕，床垫，乳胶被等产品。
The Brand Diplex are majorly focus on sale the latex products, such as the latex pillow, latex mattress etc.

Chadyala Art

6.1C7-15

Address: 巴基斯坦 Pakistan sindh-karachi-A76,block-11,gulshan-e-iqbal ,
Tel: 00923456152016
Email: hasan_impex@hotmail.com
Web: www.facebook.com/chadyalart

We are leading exporters of Hand Knotted Carpets which are very demanding in China specially the silk carpets are the most demanding product from Pakistan to China , as we the manufacturer of Hand made carpets which are only make in Pakistan by hand , we would like to put in your knowledge that we are the one of the most activist exhibitor in Chinese Government Exhibition from Pakistan .

Sozandai Sugd

6.1C7-18

Address: 塔吉克斯坦 Tajikistan Republic of Tajikistan-Oftobruya area-Sughd region,Bobodzhon Gafurov district
Tel: 927832666
Email: 632010027@qq.com
Web:

The purpose of the company, let the motherland of goods to the world

金世缘乳胶制品(泰国)有限公司 / JSY Latex Products (Thailand) Co., Ltd.

6.1C8-01

Address: 泰国 --曼谷-泰国曼谷辉煌区拉差达披色路238/10号 Thailand --Bangkok-238/10 Ratchadapisek Road, Huai-Kwang
Tel: 02-2741318
Email: palm_ywnwa@hotmail.com
Web: www.jsylatex.icoc.me

JSY LATEX(泰国)成立于2016年3月，我们是一家专业从事天然乳胶制品研发和生产的高新企业。也是泰国天然乳胶寝具制品的领头企业，我们的天然乳胶寝具产品有：乳胶枕头、乳胶床垫、乳胶片材、乳胶卷材等天然乳胶制品。
JSY LATEX (Thailand) was established in March 2016. We are a high-tech enterprise specializing in development and production of natural latex products. It is also the leading company in Thailand's natural latex bedding products. Our natural latex bedding products include: latex pillows, latex mattresses, latex film materials, latex rolls and other natural latex products.

PAK PRODUCTS

6.1C8-04

Address: 巴基斯坦 Pakistan SIND-KARACHI-2-NAWAB MANZIL SHARA IRAQ SADDAR
Tel: 92.21.35688420
Email: pakproducts.export@gmail.com
Web:

We are one of the leading exporters of Brass handicrafts bases in Karachi, Pakistan. We have spacious showroom in downtown Saddar Karachi. We have been in this business since 1983. So we have experience of 35 years. We provide our best products on economical rates.

TANG CHEN PTY LTD.

6.1C7-16

Address: 澳大利亚 Australia 12/134 SPRINGVALE ROAD,SPRINGVALE VIC 3171
Tel: 0390780270
Email: tangchenlily@163.com
Web:

TANG CHEN PTY LTD.是澳大利亚卓越的本土公司，萃选澳洲顶级羊毛原料，最先进技术，结合全手工工艺，打造最完美睡眠，保证您舒适的睡眠体验。
TANG CHEN PTY LTD. is an Australian owned company;our quilt ia made from scratch sourced from top quality A ustralian wool. The entire process is handmade onsite along-side with state of the art technology to ensure supe-rior comfort.

ENTREPRISE FARAFINA DONKO

6.1C7-19

Address: 马里 Mali Mali Bamako rue 658, porte 659 N'TOMiKOROBOUGOU
Tel: 200-7637684
Email: 1165226@qq.com
Web:

加富爾國際實業有限公司 / MEGACOOUV CO.,LTD

6.1C8-02

Address: 台湾地区 左營區-高雄市左營區明誠二路419號9樓之1 Taiwan Zuoying-9F-1, No.419,Mingcheng 2nd Rd,Zuoying Dist,Kaohsiung 813
Tel: 075583001
Email: vickypai86@gmail.com
Web: www.megacoouv.com

Since MEGA COOUV COOHT is founding in 1988, we has achieved the goal of breaking the golf products between people and technology. A profitable and sustainable Channel Business Model is instrumental to the company's continuing growth, while its multi-brand approach effectively integrates.
MEGA COOUV COOHT has created a selection of innovative sport products for both women and men.

TFU LATEX CO.,LTD

6.1C8-05

Address: 泰国 Thailand CHONBURI-BANBUNG -223/20 223/20 MOO 3 TAMBOL BANBUNG
Tel: +66(0)38-111-594
Email: tfu-latex@hotmail.com
Web: www.tfulatex.com

Tfu latex co.,ltd. is a latex foom monufacturer specicalized in natural latex mattresses, latex pillows, latex bra to the domestic and world markets, we are a modem enterprise with certain departements of researching, developing, designing, manufacturing and sales.

Fircos Shoes (Pvt) Ltd

6.1C8-06

Address: 巴基斯坦 Pakistan Punjab-Sialkot-Rehmanpur Aimenabad Road
Tel: 0092-52-3555277
Email: info@fircos.com
Web: www.fircos.com

Fircos Shoes Pvt. Ld. was established in 2001. Fircos is producing high quality Motorbike, Horse Riding and Dress/Fashion Shoes and exporting the same throughout the world including, USA, Europe, Australia to the world famous brands.

SALEEM ASSOCIATES

6.1C8-09

Address: 巴基斯坦 Pakistan SINDH-KARACHI-131 Co-Operative Market Saddar
Tel: 00922135688495
Email: taenlily@163.com
Web:

Our company is professional in hand curving wood furniture, handicrafts, real gems and hand made jewelry.

ARI Traders

6.1C8-12

Address: 巴基斯坦 Pakistan Sindh-Karachi-Suite # 4A Ayub Ali BLDG
Tel: 00922135798677
Email: mask31@yahoo.com
Web:

Our product is have Leather Goods and Garments and Fur we selling for Retail and also Export.

Trade Development Authority of Pakistan

6.1C8-16

Address: 巴基斯坦 Pakistan Sindh-Karachi-3rd Floor, Block A, FTC Building Shahra-e-Faisal, Karachi
Tel: 009299201520
Email: kaleem.memon@tdap.gov.pk
Web: www.tdap.gov.pk

The Trade Development Authority of Pakistan (TDAP) was established on November 8, 2006. TDAP is the successor organization to the Export Promotion Bureau (EPB) and is mandated to have a holistic view of global trade development. Designated as the premier trade organization of the country, TDAP shall be a dedicated, effective, and an empowered organization for development of trade.

RANA CO. (EXPORT)

6.1C8-07

Address: 巴基斯坦 Pakistan SINDH-KARACHI-H# 269, MISTRY KHAN VILLAGE REXER LINE OLD GOLIMAR NEAR PAK-COLONY POLICE STATION
Tel: 00923122838512
Email: ranaco2009@hotmail.com
Web: www.ranaco.com.pk

Rana Co. (Export) was established in 1973. The company has a solid and vast background and experience in the field of Jewelry, Furniture and Marble, processing and manufacturing of different articles and products. Under keen and professional supervision of Mr. Mohammad Saleem founder and Mr. Muhammad Waqas Saleem (proprietor) of the company.

deewan enterprises

6.1C8-10

Address: 巴基斯坦 Pakistan sindh-karachi-a51
Tel: 00923039120143
Email: smart_shah111@hotmail.com
Web:

M J TRADERS

6.1C8-13

Address: 巴基斯坦 Pakistan Sindh-Karachi-Plot No. 25/4 Model Colony
Tel: 02135879565
Email: asif_sonu31@yahoo.com
Web:

We selling for Fur coats and Leather Products we are have in export

H.skill sports

6.1C8-17

Address: 巴基斯坦 Pakistan punjab/sialkot-masjid road-64 a1
Tel: +92 523252107
Email: Goldsoni@hotmail.com
Web: www.skill.com.pk

we are manufacturer and exporter located at Pakistan Punjab Sialkot from many decades. we are producing here all sports balls and other items of Sports.

Al Rasheed Traders

6.1C8-08

Address: 巴基斯坦 Pakistan Punjab -Lahore-Lahore
Tel: 0092321722035
Email: naseer.ahmed@tdap.gov.pk
Web:

we manufacture and exports handicrafts items made up of brass and wood. we also deal in precious stones and silver. Currently, we have been participating in many exhibitions in China to export our products.

Aj Traders

6.1C8-11

Address: 巴基斯坦 Pakistan Sindh-karachi-dastagir number 9, farzana dawa khana
Tel: 00923101090789
Email: smart_shah110@hotmail.com
Web:

H.Rehman & Sons

6.1C8-14

Address: 巴基斯坦 Pakistan Sindh-Karachi-Shah-e-faisal Road FTC building block #4
Tel: 00922135383805
Email: kylerscn@gmail.com
Web:

We are the manufacturer since 1986 and we have very professional experience for customer service which is fast and reliable on time. We are manufacturing leather goods, accessories and hand made jewelries. We are exporting it also to many regions of the world specially Middle East , Europe and Asian Countries.

Fraz Enterprises

6.1C8-19

Address: 巴基斯坦 Pakistan PUNJAB-SIALKOT-C 115, 116 SMALL INDUSTRIAL ESTATE
Tel: 0523561888
Email: info@frazenterprises.com
Web: www.frazenterprise.com

Fraz Enterprises is a Manufacturing and Exporting Company of Various Sporting Goods and Equipments since 1982. Leather made Boxing equipments, weightlifting & Power lifting belts, straps to USA, Canada, Japan, Russia etc. Fraz Enterprises has always produced every product using the high quality material. Mr. Muhammad Sarfraz Butt, the proprietor has a vast experience and attended international.

F.B Enterprises

6.1C8-21

Address: 巴基斯坦 Pakistan Sindh-Karachi-FTC Building
Tel: 0092321722035
Email: naseer.ahmed@tdap.gov.pk
Web:

FB enterprises is one of the leading companies dealing in onyx/marble handicrafts. we also exporting crafts gift items made up of marble to world. We are searching a potential buyers in China for exports from Pakistan.

FENAG / ministry in charge of investments and public-private partnerships

6.1C8-25

Address: 几内亚 Guinea CONAKRY-CONAKRY-KALOUM
Tel: 623662899
Email: babaterediallo@gmail.com
Web:

The company FENAG will be the user of this booth. Emanation of professional and interprofessional organizations of craftsmen, the FENAG is the expression of the will of the government to endow the guinean handicrafts with a national structure representative of its interests and concerns; able to defend them, to promote and valorize the Artisanal know-how.

Genu-win General Dealers Limited

6.1C9-03

Address: 赞比亚 Zambia Lusaka-Lusaka-Plot 24, Makeni
Tel: +260 955 914315
Email: euphemia@picz.co.zm
Web: n/a

Deals in hand made wood crafts and semi-precious stones products

Pak Shalimar Carpets

6.1C9-05

Address: 巴基斯坦 Pakistan Punjab-Lahore -54-Lawrence Road
Tel: +924236368849
Email: info@pakshalimar.com
Web: www.rugsncarpets.com

Pak Shalimar Carpets is a renowned business Firm, registered as a partnership concern under the Law of Pakistan and engaged in the occupation of manufacturing and export of handmade quality rugs & carpets from Pakistan since 1970.

HAMDAN TRADERS

6.1C8-22

Address: 巴基斯坦 SIND-KARACHI-A-204, AL-HABIB APARTMENTS BLOCK 8, KEHKASHAN, CLIFTON Pakistan SINDH-KARACHI-A-204, AL-HABIB APARTMENTS, BLOCK 8, KEHKASHAN, CLIFTON
Tel: 92.21.35652951 / 00922135685851
Email: hamdantraders@hotmail.com faizanahmed_best@hotmail.com
Web:

Hamdan Traders was established in 1999 for providing a fascination range and variety of semi precious stones, beads and its handicrafts as well as marble/onyx handicrafts to the customers. This unique range comprises of uncut, cut, faceted, rough and polished pieces of semi precious stones, bracelets/necklaces and onyx Ashtrays, Bowls, Chess Sets and many other gift items for decoration.

LITTLE WALK ENTERPRISES LIMITED

6.1C9-01

Address: 赞比亚 Zambia LUSAKA-LUSAKA-BOX 31696
Tel: +260972-115262
Email: mwabambobola@gmail.com
Web:

IT DEALS WITH HANDCRAFTS, ROUGH AND GEM STONES AND AFRICAN OUTFITS CLOTHES AS WELL AS JEWELRY.

Continental Traders

6.1C9-07

Address: 巴基斯坦 Pakistan Sindh-Karachi-DHA Phase-6
Tel: 0092321722035
Email: naseer.ahmed@tdap.gov.pk
Web:

Continental Trader is one of the leading companies of manufacturing gifts items of different handicrafts and based in Karachi, Pakistan. We have been exporting our quality products to different countries.

Osumbo General Dealers

6.1C8-23

Address: 赞比亚 Zambia Lusaka-Lusaka-Plot 8, Simon Mwansa Kapwepwe Road
Tel: 00260979375955
Email: joyce.himbole@gmail.com
Web:

Barlogem

6.1C8-24

Address: 赞比亚 Zambia Zambia-Lusaka-25793, Woodlands Extention
Tel: 260978498684
Email: kmbewe@outlook.com
Web: n/a

Zambian company Dealing in gemstone and Polishing Hand crafts Jewellery.

Cowrays enterprises

6.1C9-02

Address: 赞比亚 Zambia LUSAKA-LUSAKA-BOX 31696
Tel: +260973101984
Email: mwambazibupe52@gmail.com
Web:

COWARYS ENTERPRISES WAS FORMED IN 1997, WE ARE DEALING IN WITH: 1. ROUGH STONES, GEM STONES, AFRICAN OUT FITS, JEWELRY, WOODEN HANDCRAFT

Sheikh Carpet Industries

6.1C9-11

Address: 巴基斯坦 Pakistan Punjab-Lahore-32 davis road off sundar das road
Tel: 0092-42-36286121
Email: sheikhcarpetindustries32@gmail.com
Web:

Manufacturer and Exporter since 1965

Kieninger Uhrenfabrik GmbH

6.2A1-01

Address: 德国 Germany Aldingen-Brunnenstraße-Brunnenstraße 37/ D-78554 Aldingen Germany
Tel: 021-59753835
Email: jenny@sh-qingya.com
Web: www.sh-qingya.com

肯宁家工厂始建于1912年，是全世界现存历史最悠久的落地钟、挂钟及壁炉钟机械机芯生产商。肯宁家始终坚持传统的经营理念——生产技术先进、质量高超的机械机芯和时钟。毋庸置疑的是，今天肯宁家以完美的手工艺生产出最高质量的产品，成为业内知名品牌，创造经典。

Kieninger was founded in 1912 in the Black Forest by Joseph Kieninger. therefore is the eldest existing manufacturer of mechanical clock movements for grandfather-,wall-and mantel clocks in the world.

俄罗斯布良斯克商业有限公司 / Bryanskfarm

6.2A2-04

Address: 俄罗斯 Russia Bryansk Oblast-Dyatkovo-2 Sidorova Street,Lyubokhna Settlement
Tel: 021-66300861
Email: leon_lens@126.com
Web: www.dyatkovocrystal.com

Dyatkovo Crystal（迪亚斯科沃）诞生于1790年,为俄罗斯国宝级水晶生活用品和艺术品,产品纯手工打造,立足于全球一流品质，涵盖花瓶，酒具，灯具，果盆，工艺品，纪念品等。多次斩获巴黎、维也纳、马德里等欧洲高品质大奖，并长期被评选为俄罗斯100件最好商品，部分藏品还被苏富比和佳士得拍卖。自1952年起一直在克里姆林宫作为接待用具。如今为众多高档酒店，世界豪门体育赛事都使用我们产品。

Dyatkovo Crystal was born in 1790,which is Russian typical crystal articles for daily use and artworks.All products, including vases, wine sets, lamps, fruit bowls, souvenirs, are handmade and apply world top technique, which guarantee quality. Dyatkovo Crystal has ever won many European quality awards in Paris, Vienna and Madrid, and has always been selected as one of Russia's 100 best products.

INNOBEAUTY GLOBAL LIMITED

6.2A3-04

Address: 日本 Japan 東京都-八王子市-子安町3丁目30番19号
Tel: 021-31593991
Email: amy.chao@innobeauty.jp
fei.lu@innobeauty.jp
Web: amy.chao@innobeauty.jp
fei.lu@innobeauty.jp

Estée Lauder International, Inc.

6.2A1-02

Address: 美国 United States of America NY 10153-NY-767 Fifth Avenue, 41st Fl.
Tel: 18901960999
Email: euyu@cn.estee.com
Web:

雅诗兰黛与倩碧品牌于1993年进入中国市场，在上海设立第一个销售柜台。2002年7月雅诗兰黛集团正式成立在中国的全资子公司。截止2017年12月，雅诗兰黛集团在中国130多个主要城市的各大高级百货公司及商场设有1700多个销售点，经营雅诗兰黛、倩碧、朗仕、悦木之源、魅可、海蓝之谜、芭比波朗、祖·玛珑、汤姆·福特、朵梵、杰尼亚等品牌。
雅诗兰黛中国公司自成立以来始终以高于行业平均水平的速度发展。
As early as 1993, two of the Company's brands – Estee Lauder and Clinique, were introduced into China. A wholly-owned trading company was established in 2002.
Today, we are the leading company in prestige cosmetics in its distribution with 12 brands.
As of 2018, our strong distribution network covers 118 cities.

Tissot SA, Le Locle

6.2A3-01

Address: 瑞士 Switzerland shanghai-shanghai-徐汇区天钥桥路30号美罗大厦8楼
Tel: 24125525
Email: eva.li@cn.swatchgroup.com
Web:

Bugari Armando SRL

6.2A3-02

Address: 意大利 Italy Via Adriatica 23, Castelfidardo, Ancona, Italia
Tel: 15122607000
Email: 253623005@qq.com
Web: www.bugariarmando.com

Our craftsmen passion and enthusiasm makes sure there is a steady innovation process, innovative materials and new production techniques are constantly tested and revised to implement the quality of our products. In the last years we have unveiled important innovations that have enhanced acoustic performances of our accordions and have reduced their weight and dimensions at the same time.
We con

阿斯特拉 / ASTRA GOLD s.r.o

6.2A2-01

Address: 捷克 Czech Zloninska-Praha-Zloninska 581,250 65 Bast, Praha, Czech Repubic
Tel: 8615881188116
Email: 3511687868@qq.com
Web:

WALDMANN KG

6.2A2-02

Address: 德国 Germany Birkenfeld -Car-Zeiss Str.6
Tel: 15216697706
Email: alina.yu@waldmannpen.cn
Web: www.waldmannpen.com/en

德国Waldmann于1918年 由Adolf Waldmann先生创立，工厂扎根于德国著名的珠宝及钟表制造工业区Pforzheim（普福尔茨海姆）市。Waldmann书写笔是欧洲皇室指定用笔，100%德国制造，工厂初期以黄金和925纯银制作机械铅笔为主，至今一直以925纯银来制造最优质的书写工具。Waldmann所有的笔均由内部工匠以手工打造，其产品是最具价值及独一无二的，在德国制笔工业中名列首三位，在全球制笔工业中排列首十位。
Waldmann writing instrument manufacturing was founded in 1918 in Pforzheim, the German jewellery metropolis with a rich tradition in the Black Forest, as the production site of writing instruments made from gold and 925 Solid Sterling Silver by Adolf Waldmann. Waldmann has been producing writing instruments for many world famous companies from all sectors under their own brands.

Imperial Porcelain Manufactory JCS

6.2A3-03

Address: 俄罗斯 Russia Saint-Petersburg -Obukhovskoi oboroni 151
Tel: +79110260888
Email: andrey_bednyakov@mail.ru
Web: www.ipm.ru

俄罗斯皇家陶瓷工厂是欧洲最古老的瓷器厂之一，也是俄罗斯最大的艺术瓷器生产企业之一。位于圣彼得堡，由伊丽莎白女王的命令于1744年创立。如今，IPM是俄罗斯最着名的瓷器工厂，生产存储在世界著名博物馆中的特别的产品。
Established in 1744 in Saint Petersburg by order of Empress Elizabeth, the daughter of Peter the Great, the Imperial Porcelain Manufactory became the first porcelain works in Russia and the third one in Europe. Factory has more than 20 painters, produce daily use porcelain and unique products that are held in world famous museums. For 275 years Imperial Porcelain is the most famous brand in Russia.

欧莱雅 / L' Oréal

6.2A3-05

Address: 14 Rue Royale, 75008 Paris 法国
Tel: +8621 52008663
Email: Angel.JIN@loreal.com
Web: www.loreal.fr

欧莱雅致力于美丽事业已有超过100年的历史。集团旗下拥有36个多元而互补的国际品牌，2018年全球销售额高达269亿欧元，在全球拥有86,000名员工。欧莱雅战略的核心是研发与创新，以及一支拥有3,993人的研发与创新团队专门致力于满足全球各地消费者对美的需求和向往。
L'Oréal has devoted itself to beauty for over 100 years. With its unique international portfolio of 36 diverse and complementary brands, the Group generated sales amounting to 26.9 billion euros in 2018 and employs 86,000 people worldwide. R&I, and a dedicated research team of 3,993 people, are at the core of L'Oréal's strategy, working to meet beauty aspirations all over the world.

FurCanada

6.2A4-01

Address: 加拿大 Canada British Columbia-Nanaimo-Unit C 2345 Delinea Place
Tel: 1 250 585 1800
Email: info@furcanada.com
Web: www.furcanada.com

FurCanada始建于1999年，是加拿大顶级皮草制造商，生产优质皮毛毯、靠枕等家居产品及成衣。我们用精湛的工艺将野生动物皮毛，如猞猁、山猫、狐狸、狼、貂、海豹及等，加工成家居产品。标本制作部门生产馆藏级动物标本（如北极熊，驼鹿，独角鲸）远销世界各地，包括青岛海洋动物博物馆和美国好莱坞电影公司。此外，世界上许多知名的收藏家和加拿大各级政府也购买我们的产品作为私人藏品或者教育科普使用。
FurCanada is a world class Canadian fur manufacturing company since 1999.
We produce premium quality luxurious fur products such as home decor blankets and garments.Our Taxidermy division creates premium class specimens as large as polar bear, moose narwhal, which can be found in museums around the world including the Qingdao Marine Mammal Museum in China as well as American Hollywood movies.

KIC Home GmbH

6.2A4-03

Address: 德国 Germany 22145 Hamburg-Hofstückenstieg 9 a
Tel: 021-61952222
Email: wenying@kic.com.cn
Web: www.kichome.com

Unilever Prestige

6.2A3-06

Address: Singapore #06-22 Mapletree Business City, 20 Pasir Panjang Road
Tel: 021-22127097
Email: melody.yu@unilever.com
Web:

联合利华是世界领先的家居护理、美妆和个人护理、食品、茶和冰淇淋产品的供应商之一，旗下拥有400多个品牌，产品畅销全球190多个国家和地区。每一天全球有25亿消费者使用我们的产品。2018年全球销售总额达510亿欧元，其中超半数的业绩来自发展中国家和新兴市场。
Unilever is one of the world's leading suppliers of Beauty & Personal Care, Home Care, and Foods & Refreshment products with sales in over 190 countries. On any given day, 2.5 billion people use Unilever products to feel good, look good and get more out of life – giving us a unique opportunity to build a brighter future.

St. Geneve

6.2A4-02

Address: 加拿大 Canada BC-Richmond-11160 Silversmith Place
Tel: +6047272600
Email: yang.jiang@shaw.ca
Web: stgeneve.com

St Genève是世界上最优秀的羽绒被和羽绒枕制造商之一，我们一直对制造世界上最精致的羽绒制品有着深厚的情感。我们深知睡眠质量关乎人体健康，我们研发团队专注于人体睡眠习惯的研究，制作出世界顶级的产品。
我们的创始人，Michael de la Place，设计羽绒产品已有五十多年的历史，他带领St Genève全体员工精工细作，打磨产品细节，使我们的产品在设计质量方面在北美都享有声誉。同时他也
A good sleep is critical to the quality of health and wellbeing. St Genève is one of the world's premier makers of exquisite duvets and pillows. Our founder, Michael de la Place, has been designing down products for over 50 years and was also president of the Down Association of Canada for 20 years.

Glory Casa Business Management Company Limited

6.2A4-05

Address: 香港地区 香港-香港-RM 2602 RICHMOND COMM BLDG 109 ARGYLE ST MONGKOK KL Hong Kong HongKong-HongKong-RM 2602 RICHMOND COMM BLDG 109 ARGYLE ST MONGKOK KL
Tel: +86-18301855863
Email: secretary@chinaredstar.com
Web:

拥有意大利家居品牌，每年有超过200件全球首发产品，为中国金字塔顶尖的人群及精英阶层打造一生以求的私享家，产品类型包含家具、饰品、灯饰、地毯、床垫、床品、香薰、壁炉、瓷器及艺术画。
With 88 Italian household brands, more than 200 new products are launched worldwide every year, Glory Casa is creating dream&significant homes for the top social elites. Product types include furniture, accessories, lighting, carpets, mattresses, bedding, aromatherapy, fireplaces, porcelain and art paintings.

Rückl Crystal a.s.

6.2A3-07(14)

Address: 捷克 Czech Central Bohemia-Nižbor-Lánská 141
Tel: +420 311 696 111
Email: koudelkova@ruckl.cz
Web: www.ruckl.com

The Rückl family glassworks is renowned for top-quality cut crystal since 1846. The glassworks focuses on exclusive hand-made production, with master-level glass cutting in two esthetic styles. While the Rückl Contemporary collection boasts modern shapes and a pastel-crystal color palette, Rückl Heritage proudly highlights classic beverage crystal sets with delicately cut patterns.

Carpet Lover club & Bordbar Art

6.2A4-02

Address: 伊朗 Iran Esfahan-Esfahan-no 11+2, Posht Matbakh alley , Ostandari street
Tel: 00983132226060
Email: bordbar.hossein@gmail.com
Web: www.carpetloverclub.com

欢迎来到精美的手工编织艺术地/挂毯的世界。Bordbar的每一块手工编织毯都超越你的想象力。每件作品都能唤醒你对美的追求。我们的地毯保留并恢复了波斯的传统文化。Bordbar艺术品的优点在于深入研究设计，使用本地生产的手纺羊毛和丝绸天然染料。
The Hand Knotted Masterworks Every Bordbar hand knotted rug inspires the imagination. The beauty of each piece evokes fascination. Each sample retains and revives the aura of the very best of past Persian tradition.
The virtue of Bordbar artwork is due to thoroughly studied designs, the use of locally produced hand-spun wool, and silk natural dye.

水河一名成员责任有限公司 / Water river a member liability co. LTD

6.2A4-05

Address: 越南 河内尝信县云溧镇那本村 Vietnam Nanben village, yunli town, xinxian county, Hanoi
Tel: 18620272765
Email: 412442522@qq.com
Web:

Shuihe one member liability co., LTD., registered in Vietnam and Laos, is a professional development, design, production, sales in one company. Our company has branches or agents in Vietnam, Laos, myanmar, Cambodia and China. In 2018, the products produced by the company participated in the first China import expo on behalf of the Lao country, and the products were inspected by President xi jinpin

Mughal cottage industries

6.2A4-06

Address: 印度 India ABI KARPORA NEHRU PARK BOULEVARD ROAD SRINAGAR, J&K
Tel: 919797204931
Email: 412442522@qq.com
Web:

国王时代公司员工人数:300人,主要生产:手工地毯,手工围巾,铜毯,家具毯、金丝毯等。1986年由sam的孙子带入巴西、中国、土耳其、伊朗、英国、阿富汗等世界各国。公司致力于促进国际贸易,向世界推广古老的印度文化传承。
King times company staff: 300 people, mainly produces: hand-made carpets, hand-made scarves, copper blankets, furniture blankets, gold silk blankets and so on. In 1986, Sam's grandson brought him to Brazil, China, Turkey, Iran, Britain, Afghanistan and other countries in the world. The company is committed to promoting international trade and promoting the heritage of ancient Indian culture to the.

Kathy & Associates Pty Ltd

6.2A5-03

Address: 澳大利亚 Australia NSW2009-Pyrmont -Unit 503 No.117 Murray Street Pyrmont NSW2009
Tel: 021-54888223
Email: huiqun_wu@163.com
Web:

The company mainly use resources which is based on its strategic partnership resources to seek bilateral business cooperation projects for Chinese enterprises investing in Australia, and provides consulting services such as investment market environment assessment and project financing scheme.

纪娜梵 / Genavant Ltd

6.2B1-01

Address: 英国 United Kingdom Cambridge-Cambridge-18 Jesus Lane
Tel: 18679386731
Email: tao@genavant.com
Web: www.genavant.com

GÈNAVANT纪娜梵品牌诞生于英国,定位为高端设计师品牌,融贯东西创意哲思,焕新设计风格,表征现代工匠精神,倡导高品质的生活理念。主打产品为至精至美,工艺精湛的珠宝鞋及珠宝首饰等独一无二的艺术风尚之作。继伦敦时装周2018春夏系列发表会之后,通过参加首届进口博览会的完美契机GÈNAVANT纪娜梵步履正式踏上神州中国。
GÈNAVANT established in the UK, positioned as a high-end designer brand, blending creative philosophy from the east and the west, rejuvenating the design style, representing the spirit of modern craftsmen, and advocates a quality life concept.

COOPERATIVA CERAMICA D'IMOLA / IMOLA

6.2A5-01

Address: 意大利 Italy Via Vittorio Veneto, 13-40026 Imola (BO)
Tel: 13436756098
Email: hw15286825@qq.com
Web: www.imolacn.com

1874年,意大利IMOLA陶瓷诞生于意大利伊莫拉市,凭借卓越的产品品质、独特的艺术魅力、出色的环保性能和完善的售后服务,享誉世界。目前IMOLA拥有六大系列瓷砖品类,建立了以解决“个性化生活方式”为目的的产品体系,满足消费者“提高生活品质,追求美好生活”的渴望,现已占据中国进口瓷砖市场的半壁江山。

Imporium DE GmbH

6.2A5-04

Address: 德国 Germany Rhein-Sieg-Kreis-Nordrhein-Westfalen-Rottbitzer Str.17,DE-53604 Bad Honnef
Tel: （0151）43100566
Email: minminhuang@imp-city.com
Web:

RUDSAK

6.2B1-02

Address: 加拿大 Canada Quebec-Montreal-9160 St-Laurent, Suite 400
Tel: +862151205218
Email: yan.z@rudsak.com
Web: www.rudsak.com

In 1994, RUDSAK was the first Canadian outerwear brand to go beyond function by infusing into each of its pieces a commitment to fashion by creating refined silhouettes and designs with iconic attributes rooted in attitude. Today, RUDSAK continues to be recognized as the leading premium outerwear brand committed to luxury, leather detailing and statement pieces.

保迪弗兰德有限公司 / BODYFRIEND CO., LTD.

6.2B1-04

Address: 韩国 首尔特别市-江南区道谷路139号 ROK(Republic of Korea) Seoul-139, Dogok-ro, Gangnam-gu
Tel: +82 2-3448-8980
Email: john.lee@bodyfriend.co.kr
Web: www.bodyfriend.co.kr/main/main.bf

韩国按摩椅公司

Galerie N/Z

6.2A5-02

Address: 美国 United States of America New York-New York-380 Rector Plc
Tel: 021-64152090
Email: info@classicjen.com
Web: www.classicjen.com

《米尔金》有限公司 / Milkin Limited

6.2A5-05

Address: 俄罗斯 斯维尔德洛夫斯克州-叶卡捷琳堡市-俄罗斯斯维尔德洛夫斯克州叶卡捷琳堡市切列穆霍瓦亚路51号 Russia Sverdlovsk region-Yekaterinburg-51 Cheremuhowaya Road, Yekaterinburg, Sverdlovsk Region, Russia
Tel: 15045008200
Email: 1092623798@qq.com
Web: ivan-sp5.wixsite.com/gallary/artistpage

俄罗斯《米尔金》有限公司位于叶卡捷琳堡市。主要经营:国际文化艺术交流;展览展示;俄罗斯油画艺术研讨及推广。公司宗旨致力于全力打造中俄文化艺术的传播事业,创办初衷旨在加强中俄两国艺术、文化交流,以“人文、合作、互动、创新”的价值观,通过各种形式促进中俄两国文化艺术产品的传播,力争做到文化艺术与商业相结合,艺术带动商业运作,商业与社会公益活动相结合,为社会营造有氧的文化生活及理想的精神空间。
Russia's "Milkin" Ltd. is located in Yekaterinburg. Main business: international cultural and artistic exchanges; exhibitions; Russian oil painting art research and promotion. The company's aim is to create a communication cause for Sino-Russian culture and art. The original intention is to strengthen the artistic and cultural exchanges between China and Russia. With the values of "humanities, coo

德國寶電商貿易有限公司 / German Pool O2O Limited

6.2B1-03

Address: 香港地区 Kowloon-香港九龍土瓜灣馬頭角道 116 號新寶工商中心二期113號室 Hong Kong China Kowloon-Room 113, Phase 2, Newport Centre, 116 Ma Tau Kok Road, Tokwawan
Tel: 852-2773 5188 / 852-27735188
Email: karen.admin@germanpool.com info@thesparklecollection.com
Web: www.germanpool.com thesparklecollection.com

德国宝高端副线文创品牌THE SPARKLE COLLECTION by german pool汇聚闪烁元素、优秀合作伙伴、原创保证、颠覆性概念、千变万化款式、限量精品及专属设计等七大元素,将传统东方文化与现代创新意念融入艺术元素,打造艺术与功能性兼全的时尚精品,包括旗袍、首饰、礼品、电器及家具,尽现低调奢华,勾勒生活哲学之美;品牌现已进驻奢华精品零售商中艺、奢侈品电商平台寺库及各大航空购物渠道。
Sparkling & modern glamorous, THE SPARKLE COLLECTION by german pool is a cultural & artistic brand of exclusive East meets West designer items - Qipao, jewelry, gifts, appliances & cabinets distributed via prestigious Arts & Crafts, airlines & e-platforms. Authentic, kaleidoscopic & revolutionary, this luxury brand will continue to partner with prominent artists to create unique designer products.

EbeGroup Srl

6.2B1-05

Address: 意大利 Caserta-Caserta-Corso Trieste 126 Italy Salerno-Salerno-via Salvador Allende 161D, Torre del Sole 2
Tel: 0039089302096
Email: info@ebegroup.it
Web: www.renatobalestra.cn

EbeGroup Srl is an italian fashion leader company. EbeGroup produces and distributes italian shoes and accessories all around the world. EbeGroup is Authorized Dealer of the italian brand Renato Balestra Made In Italy.

IGFD GRUPPO S.R.L

6.2B2-02

Address: 意大利 Italy milan-milan-Via Savona, 55a
Tel: 18621696368
Email: jacky.guo@igfdgruppo.com.cn
Web:

IGFD Gruppo S.r.l was founded in 2009. Located in Via Savona 55a in Milan. It is a neighbor with the showroom of international first-line brand such as Armani, Fendi, Moncler, Zegna. The core focus of IGFD when set up was different from the traditional showrooms, which were solely based on orders and wholesale. The core of IGFD lies in the deep root cultivation between fashion, art and education.

Tapestry Inc

6.2B3-02

Address: 美国 United States of America New York-NY-10 Hudson Yards
Tel: 18510007976
Email: fyang@coach.com
Web:

True Sky Furniture GmbH

6.2B5-01

Address: 奥地利 Austria Vienna-Margaretengurtel 52-56/5/19,1050
Tel: 0043 1 9457712
Email: info@true-sky.net
Web:

True Sky Group is an international trading Group headquartered in Vienna, Austria. Its former was Komm & Kauf Group, business includes furniture、fast goods and clothing trade, investment and management at cable TV、supermarket、LED bulbs contract energy management.

Bartolucci Francesco Srl

6.2B1-06(007)

Address: 意大利 Italy PU-Tavullia(PU)-Via Parrocchiale 12
Tel: +86-(021)-52185868
Email: nick_lu@isc-sh.com
Web:

Ever since 1936, the Bartolucci's name has been linked to the processing of wood. Wood is their special material! A live material, from which they extract unique, highly-prized products, filled with emotion: gift items and collector's pieces, furnishing accessories and toys, all strictly "Made in Italy".

DOLCE & GABBANA S.r.l.

6.2B2-03

Address: 意大利 Italy Via Goldoni, 10, 20129 Milano
Tel: +39 0277888640
Email: Daniela.Sparice@dolcegabbana.it
Web: www.dolcegabbana.it

Dolce & Gabbana 成立于1985年,是时尚和奢侈品领域的国际领导者。集团生产和销售高端服装、皮具、鞋类、配饰、珠宝和手表。
Established in 1985, Dolce&Gabbana is an international leader in the fashion and luxury goods sector. The Group creates, produces and distributes high-end clothing, leather goods, footwear, accessories, jewelry and watches.

CHARLES JOURDAN 1921

6.2B4-01

Address: 法国 France SEVRES-20 RUE TROYON
Tel: +33611017479
Email: jean-francois.ferrandiz@charles-jourdan.com
Web:

specialized in women's luxury shoes & leather goods 100 years after its birth, Maison Charles Jourdan is capitalizing on its rich history and its unique actual luxury positioning, which combines pleasure, quality and affordability. Charles Jourdan is synonym of permanent creativity, with a special and unique French touch.
To reinvent, create and modernize sustainably shoes for the good and the pleasure of our customer is our everyday duty.

LVMH

6.2B2-01

Address: 法国 France Ile-de-France-Paris-22 avenue Montaigne
Tel: +33 (0)1 44 13 22 52 / +33 (0)1 44 13 22 22
Email: lvmh-communications@lvmh.fr
Web:

KERING SA

6.2B3-01

Address: 法国 France Paris 75007-40 rue de Sevres
Tel: 021-6-876889
Email: chelsea.huang@kering.com
Web:

作为全球高端精品集团,开云汇聚一系列知名的时装、皮具、珠宝及腕表品牌:古驰(Gucci)、Saint Laurent、Bottega Veneta、Balenciaga、亚历山大·麦昆(Alexander McQueen)、布里奥尼(Brioni)、宝诗龙(Boucheron)、宝曼兰朵(Pomellato)、都都(Dodo)、Qeelin、雅典表(Ulysse Nardin)、GP芝柏表(Girard-Perregaux) 以及开云眼镜。
A global Luxury group, Kering manages the development of a series of renowned Houses in Fashion, Leather Goods, Jewelry and Watches: Gucci, Saint Laurent, Bottega Veneta, Balenciaga, Alexander McQueen, Brioni, Boucheron, Pomellato, Dodo, Qeelin, Ulysse Nardin, Girard-Perregaux, as well as Kering Eyewear.

True Sky HandelsgmbH

6.2B4-02

Address: 奥地利 Austria Vienna-Margaretengurtel 52-56/5/19,1050
Tel: 0043 1 9457712
Email: info@true-sky.net
Web:

True Sky Group is an international trading Group headquartered in Vienna, Austria. Its former was Komm & Kauf Group, business includes furniture、fast goods and clothing trade, investment and management at cable TV、supermarket、LED bulbs contract energy management.

鴻佑寶石實業有限公司 / Horng Yow Gem Stone Co.,Ltd.

6.2C1-001（01）

Address: 台湾地区 Taiwan China-新北市-溪尾街5巷49號1樓 Taiwan-New Taipei-1F., No. 49, Ln. 5, Xiwei St.,Sanchong Dist.,
Tel: +886-2-29848535 / +886229854935
Email: hornggow@gmail.com
Web: www.horngyow.com/store/ourstory.php

鴻佑寶石為全球最具領導地位及最具規模的閃石(俗稱碧玉)製造商與批發商之一，專營臺灣寶玉石飾品開發及銷售推廣業務。，集團創始人三十幾餘年來秉持著『取地之靈，琢玉成器』之企業精神，嚴格篩選品質優良並提供顧客貨真價實之天然寶玉石：同時，帶領著專業的雕刻師傅團隊，精雕細琢地創造出極致雕刻作品。

典藏設計工作坊 / Dianjen Jewelry Design Co., Ltd.

6.2C1-001（02）

Address: 台湾地区 台北市-大同區南京西路191號1樓 Taiwan 1F., No. 191, Nanjing W. Rd., Datong Dist., Taipei City 103, Taiwan
Tel: +886225975287
Email: karen_070494@yahoo.com.tw
Web:

林進成號 / LIN JIN CHENG

6.2C1-001（03）

Address: 台湾地区 台北市-中正區-羅斯福路一段8號2樓242室 Taiwan Taipei-Zhongzheng District-Room 242, 2nd Floor, 8th Section, Roosevelt Road
Tel: +886963761787
Email: 2967518319@qq.com
Web:

經營A貨翡翠、鑽石，鑲嵌設計。
Operating a cargo jade, diamond, mosaic design.

翠之家有限公司 / Jade Garden Co., Ltd.

6.2C1-001（05）

Address: 台湾地区 Taiwan China-台北市-南京東路五段233號 Taiwan-Taipei-1F., No. 233, Sec. 5, Nanjing E. Rd., Songshan Dist.,
Tel: 27479999 / +886227479999
Email: slw.re.co@gmail.com
Web: www.jadegardenjewelry.com

好的品質不怕比」，這是翠之家一向秉持的經營理念，翠之家的翡翠品質及價位絕對經得起比較！翠之家以多年的批發經驗，所有翡翠不論種、水、色、工，均為上乘之作！所有作品一律經由以精湛翡翠雕工聞名的名師雕刻，以及台灣設計專業團隊創作，在市場實物交易中，具有最佳CP值。歡迎網路選購，亦期待您親臨門市參觀指教。
Good quality is not afraid of comparison. This is the business philosophy that Cuizhi has always upheld. The quality and price of Cuizhi's jadeite can stand up to comparison!

金豐珠寶有限公司 / Jin Fong Jew Co., Ltd.

6.2C1-001（06）

Address: 台湾地区 Taipei-台北市-大安區忠孝東路四段216巷37號1樓 Taiwan Taipei-1F., No. 37, Ln. 216, Sec. 4, Zhongxiao E. Rd., Da' an Dist., Taipei City 106, Taiwan
Tel: 27714235
Email: Cathy310580@hotmail.com
Web:

有最新現代化的珠寶設計、翡翠、鑽石、紅藍寶、珍珠、各式有色寶石

佳宝银楼有限公司 / JIA BAO JEWELLRY CO., LTD.

6.2C1-001（04）

Address: 台湾地区 台北市-大安區-忠孝東路4段303號7樓之1 Taiwan Taipei City-Da'an Dist.,-Rm. 1, 7F., No. 303, Sec. 4, Zhongxiao E. Rd.,
Tel: 18895138748
Email: 2967518319@qq.com
Web:

主要营业珠宝首饰、高端珠宝定制、批发，拥有翡翠三代经验传承，并提供种、水、色、工均优的翡翠裸石及成品，配合台湾设计专业团队创作，在市场实物交易中，具有独创性及特色。
The main business jewellery, high-end jewelry custom, wholesale, with three generations of jade experience, and provide jadeite and finished products of water, color, and workmanship, with the creation of Taiwan's design team, in the market physical transactions, originality Sex and characteristics.

雅士精品國際有限公司 / Ascott Boutique International Co., Ltd.

6.2C1-001（07）

Address: 台湾地区 台北市-大安區-和平東路一段186號 Taiwan Taipei City-Da'an Dist., -No. 186, Sec.1, Heping E. Rd.,
Tel: 15901279901
Email: 2967518319@qq.com
Web:

本公司專營非物質文化遺產花絲鑲嵌，兼具批發、零售等業務。
The company specializes in intangible cultural heritage filigree inlays, both wholesale and retail.

運繕國際貿易公司 / YUNSHAN International Trade Co., Ltd

6.2C1-001（08）

Address: 台湾地区 彰化市-員林鎮-湖水路8 Taiwan-Changhua County-No. 80, Hushui Rd., Yuanlin City
Tel: 13115756536
Email: 1592027038@qq.com
Web:

運繕國際貿易有限公司主要經營：珠寶首飾、珍珠飾品，有完善的質量保證體系。為開拓市場，實現互惠互利，我們將本著“價格、質量”雙優，“誠信、服務”共贏的經營理念，竭誠為國內外客戶服務。
Yunyi International Trading Co., Ltd. is mainly engaged in: jewelry, pearl jewelry, and a sound quality assurance system. In order to develop the market and achieve mutual benefit, we will serve the customers at home and abroad with the business philosophy of "price, quality, quality, integrity, service and win-win".

晶鎮吉興業有限公司 / Jing Zhen ji Jixing Industry Co., Ltd.

6.2C1-001（09）

Address: 台湾地区 新北市-鶯歌區-重慶街34號2樓 Taiwan New Taipei City-Yingge Dist-2F., No. 34, Chongqing St.,
Tel: +886226702208
Email: as30101@yahoo.com.tw
Web:

本公司專營各種寶石原料進口，工廠自營/批發零售、高級珠寶設計等。
The company specializes in the import of various gem materials, factory self-operated / wholesale and retail, high-end jewelry design, etc.

Marchisio1859

6.2C1-002

Address: 意大利 Italy Moncalieri-Italy
Tel: 18710198975
Email: 471724575@qq.com
Web:

Fedesmeraldas

6.2C1-003

Address: 哥伦比亚 Colombia CU-Bogota-Carrera 6 #12 88 of 603
Tel: 3208552991
Email: presidencia@acodes.org
Web: www.acodes.org

NEW JEWEL LANKA

6.2C1-004

Address: 斯里兰卡 Sri Lanka GALLE-NO21 MIDDLE STREET, FORT
Tel: 13951332722
Email: 359770474@qq.com
Web:

株式会社ジェイエスジャパン / JS JAPAN CO.,LTD.

6.2C1-005

Address: 日本 SAITAMA-FUJIMINO-SHI-埼玉県ふじみ野市苗間281-11 Japan SAITAMA-FUJIMINO-SHI-281-11, NAEMA,
Tel: 81-492661830
Email: hirain@nifty.com
Web:

华泰珠宝（香港）有限公司 / WAH TAI JEWELLERY CO.,LTD

6.2C1-006

Address: 香港地区 HongKong China 九龙-尖沙咀-FLAT 12A, TOWER 1, HARBOURFRONT LANDMARK, HUNG KL
Tel: 0755-25787610
Email: 1030574883@qq.com
Web:

公司经营海水和淡水珍珠的加工和养殖

Rosarian Diamond Co.,Limited

6.2C1-007

Address: 香港地区 HongKong China Unit 04,7/f, Bright Way Tower, NO.33 Mong Kok ROAD, kowloon, HK
Tel: 00852-22333000
Email: 330730611@qq.com
Web:

Rosarian Diamond Co.,Limited established in 2009, has a licensed qualification for legally and efficiently importing naked diamonds. As a senior leader in the diamond wholesale industry, the company's naked diamond appraiser is responsible for directly facing customers, thus bringing more cost-effective diamonds to consumers who need to buy diamonds.

詠利(國際)發展有限公司

6.2C1-008

Address: 香港地区 HongKong China 九龍荔枝角青山道704號, 合興工業大廈A座7樓B2室
Tel: 13816388277
Email: bmwz8888@126.com
Web:

THS SOUTHERN HEMISPHERE GROUP TRADING LIMITED

6.2C1-009

Address: 香港地区 HongKong China Kowloon-Room 703, 7th floor, Kowloon Road, 555 Nathan Road
Tel: 0571-88911777
Email: 228154802@qq.com
Web:

天聚会珠宝集团（香港）有限公司 / TENGATE JEWELLERY GROUP(HK) LTD

6.2C1-010

Address: 香港地区hongkong-12/F, san toibuilding,139connaught Rood central, Hong Kong China
Tel: 020-81040703
Email: 2467020342@qq.com
Web: 13640313152.1688.com

本公司传承于意大利手工工艺，专注于珠宝市场的开拓，将现代科技与传统工艺相结合，集研发、设计、生产、销售于一体，洞悉时尚潮流前沿，以珠宝首饰为载体，营造全新高尚品质生活，追求卓越的现代个性之美。
The company inherits in the Italian handwork craft, concentrates on the jewelry market development, will the modern science and technology and the traditional craft union, the collection research and development, the design, the production, the sale in an organic whole, the insight fashion tide front, takes the jewelry as the carrier, creates the brand-new noble quality life, the pursue remarkabl.

Brand Kingdom 株式会社

6.2C1-011

Address: 日本 Japan 东京都北区5-2-2 835号
Tel: 03-6875-4087
Email: bk180901@yahoo.co.jp
Web:

Megatech

6.2C1-012

Address: 土耳其 Turkey stanbul-Ümraniye-Imes Sanayi Sitesi E Blok 501 Sok. No: 13
Tel: 86-057488397756
Email: sales_7@goodtimegr.com
Web:

TAIHU INTERNATIONAL S.A

6.2C1-013

Address: 巴拿马 Panama COLON-COLON-CALLE 15C, EDIFICIO PARVANI, LOCAL#14 ZON LIBRE DE COLON
Tel: 0086-575-87258137
Email: hewenweiqian@163.com
Web:

The company is located in Cologne Free Trade Port, Panama. It specializes in importing and exporting cultured seawater pearls, amber and gemstones, which are sold all over the world. Welcome customers from all over the world to negotiate business.

俊銮金饰有限公司 / Majestic Gold Limited

6.2C1-014

Address: 香港地区 九龙红磡民裕街41号凯旋工商中心第一期10楼C室 -Unit C, 10/F, Kaiser Estate Phase 1, 41 Man Yue Street, Hung Hom, Kowloon, Hong Kong China
Tel: 852-23556380
Email: info@minted.com.hk
Web: www.minted.com.hk

MINTED，意大利原产轻奢珠宝。MINTED 旗下18K系列，由意大利百年K金工艺传承的老金匠锻造，顶尖金饰制作工艺，淬成每一件18K金首饰臻品。MINTED 精选始终秉持“Less is More”设计理念，超百位珠宝设计师特约手稿订制，以简洁柔和的线条，衬托出佩戴者的优雅气质。精选意大利原产精粹黄金，特制配比、严控熔温，调配出MINTED 独有的淡黄金色。
All 18K gold pieces from MINTED are crafted in Italy. From a factory with over 100 years of experience, MINTED encompasses the core concept of Less is More. From design origination to handcrafting the pieces, our focus on delicate lines and curves. MINTED uses the purest gold mixed with our proprietary alloy and melting temperature combinations to create our unique 18k gold colors.

京阳有限公司 / JING YANG CO.,LTD

6.2C1-015

Address: 澳门地区 毕仕达大马路26-54-B号中福商业中心14楼E座 Macao Av.Marciano Baptisa No.26-54-B,14 Ander E, Centro Commercial Chong Fok, Macau
Tel: 021-61820730
Email: emily.zyl@gmail.com
Web:

株式会社 WANG H.P

6.2C2-001

Address: 日本 Japan 日本東京都北区田端1-15-13-101
Tel: 81-9098529208
Email: 1165226@qq.com
Web:

Lawrence Jewellery Co Ltd

6.2C2-004

Address: 香港地区 HongKong China 7/F., Humphreys Building, 11 Humphreys Avenue, Tsim Sha Tsui, Kowloon, Hong Kong
Tel: 27220789
Email: lawtradco@gmail.com
Web:

Hong Kong fine jewellery manufacturer and wholesaler, since 1989.

卓鑫有限公司 / GOLDENCHARM

6.2C2-005

Address: 香港地区 HongKong China 尖沙咀九龙弥敦道66-70号金冠大厦9/F B2室
Tel: 13828793349
Email: ydzb2014@163.com
Web:

KONDO JEWELRY CO.,LTD.

6.2C2-006

Address: 日本 Japan 17-22 Aoba-cho Kofu Yamanashi 400-0828
Tel: +81-3-6803-2690
Email: kofu@kondo-gem.com
Web: www.kondo-gem.com

近藤珠宝成立于1986年，是日本为数不多的专门经营彩色宝石成品首饰的公司之一。近藤社长从事珠宝行业50余年，深爱珠宝事业，认为“秉持日本的匠人精神，将彩宝的魅力传达给世界各地的人们，这是我们的使命”。近年来，香港珠宝展，日本国际珠宝展等亚洲大型展会中，我们的产品深受世界各地买家们的喜爱。欢迎各位新老朋友来我司洽谈合作。

TSUKAKI CO., LTD

6.2C2-007

Address: 日本 Japan Kyoto-661,Karasuma Bukkoji, Shimogyo-ku
Tel: 0081-75-343-3547
Email: m_zhou@tsukaki.com
Web: www.tsukaki.com

TSUKAKI集团公司的事业内容：塚喜商事 株式会社（和服的制造和批发）TSUKAKI 株式会社（宝石、毛皮、手提包的制造和批发）京都和装株式会社（和服的制造和批发、加賀友禅等）MARIE CLASSE株式会社（婚礼服装的出租业务）株式会社TAMURA（瘦身内衣的制造和批发）。

MEI PEARL CO.,INC.

6.2C2-008

Address: 日本 Japan HYOGO-KOBE-4-9-23 KITANAGASA-DORI CHUO-KU
Tel: 0783317851
Email: meipearl@k3.dion.ne.jp
Web:

founded in：1964/
established in：1973/
Our business：Pearl enhancement, wholesaler, import and export

Kaspar Pearl

6.2C2-009

Address: 日本 Japan hyogo-kobe-4-11, kotonoo-cho, 2-chome, chuo-ku
Tel: 81782416733
Email: kaspar@kasparig.com
Web:

株式会社明星宝飾 / Myojou Jewelry Co.,Ltd.

6.2C2-010

Address: 日本 山梨県-甲府市-国母1-23-2 Japan Yamanashi-Koufu-city-1-23-2 Kokubo
Tel: +81552287676
Email: info@myoujyou.co.jp
Web:

公司创建有40年的历史，一直以海水珍珠为主要产品。
珍珠的18k金日本精工配件与意大利独一无二设计，提供给顾客更多样的选择。
The company has a 40-year history and has always used seawater pearls as its main product. Pearl's 18k gold Japanese Seiko accessories are uniquely designed in Italy.
Provide customers with more choices.

TTF Joaillerie

6.2C2-011

Address: 法国 France 12 Rue de paix 75002 Paris
Tel: 0755-82400029
Email: zhanglitian@ttfjewelry.com
Web: www.ttf.top

TTF Haute Joaillerie是成立于法国的高级珠宝品牌。专注于高级珠宝的设计，生产。公司聘用Cartier，Van Cleef & Arpels的工艺大师负责生产。公司在2018年6月于法国巴黎旺多姆广场和平大街9号正式开幕TTF全球首家旗舰店。TTF Haute Joaillerie 以卓尔不凡的精湛工艺、独具匠心的独特设计而备受青睐。早已跻身于国际珠宝品牌行列并被同行和全球消费者所认同。

SANVELYN COMERCIO DE JOIAS E PEDRAS PRECIOSAS LTDA

6.2C2-012

Address: 巴西 Brazil DF-BRASILIA-Q SCLRN 714 BLOCO C LOJA 49
Tel: 13361951115
Email: 25557030@qq.com
Web:

CAMCO EQUIPMENT ZAMBIA LIMITED

6.2C2-013

Address: 赞比亚 Zambia LUSAKA-LUSAKA-PLOT NO.10636F KAFUE RD
Tel: 02158905750
Email: cho@camco.cn
Web: www.camco.cn

Batcha Gems

6.2C2-014

Address: 斯里兰卡 Sri Lanka Western-Colombo-15, Station Road, Colombo-04
Tel: 0094766363573
Email: batchagemssale@gmail.com
Web:

Dealers in all types of colored gem stones.

KHIARD JEWELLERS

6.2C2-015

Address: 斯里兰卡 Sri Lanka Western-Colombo-No1-4/1 Roland Tower,Dharmaraja Mawatha
Tel: 0094112593942
Email: ibrahimzabith@gmail.com
Web:

Dealers in Gems & Jewellery

Khadijah Gems

6.2C2-016

Address: 斯里兰卡 western province-colombo-18,frances road,colombo 06 Sri Lanka Western Province-Colombo-18, Frances road, Colombo 06
Tel: 0112500597
Email: khadijahgems@gmail.com
Web:

Khadijah Gems was established by Mr. N.B.M Rizan who has a remarkable experience for more than 35 years in the industry. We source our collection of gemstones such as sapphires from Sri Lanka,Rubies from Myanmar & Mozambique to Emeralds from Colombia.Our goal is to keep all of our customers satisfied and coming back to our business for a lifetime.

SENA MILLS JEWELRY EXPORTS (PRIVATE) LIMITED

6.2C2-017

Address: 斯里兰卡 Sri Lanka 50, NAVA MMAWATHA ,COLOMBO 2
Tel: +94714832015
Email: 2812954959@qq.com
Web:

Fuego Verde GFT S.A.S

6.2C2-018

Address: 哥伦比亚 Colombia Bogota-Los Andes-Calle 18 # 4-91. Of. 206 Ed
Tel: (+86)18206555858
Email: mark@dreamkiki.com
Web:

Fuego Verde GFT S.A.S是一家哥伦比亚矿产公司，自2016以来开启国际进出口业务。主要出口哥伦比亚标志性产品祖母绿、咖啡，并在亚洲设立了分支机构，推广自己的珠宝订制牌DREAM KIKI，以及与亚洲珠宝商合作矿区直供，在线远程选宝石和矿区旅游正在筹划中。
Fuego Verde GFT S.A.S is a mining company in Colombia, mainly export Colombian emerald and coffee to Asia. FV corporate with Asian jeweler and promote "DREAM KIKI" which is a jewelry customize brand. Mine traveling and purchasing gem online system is preparing.

chengyui company limited

6.2C2-019

Address: 缅甸 Myanmar Mandalay Province-Budungi City-No.30 Qiaowen Road
Tel: 008615900857058
Email: tooen@139.com
Web:

Kakuda Pearl Co., Ltd.

6.2C2-020

Address: 日本 Japan Mie-Ise city-7-5 Hon-machi
Tel: +81-596-280231
Email: kakudaco@lilac.ocn.ne.jp
Web: kakudapearl.jp

伊藤珠宝 / pearl jewelry ito.inc.

6.2C2-021

Address: 日本 船江2-31-10-伊勢市-三重県 Japan 2-31-10 Funae-ise-shi-mie
Tel: 8520596360852
Email: pj-ito@carol.ocn.ne.jp
Web: pj-ito@carol.ocn.ne.jp

主销阿古屋，南洋，大溪地珍珠项链，戒指，耳钉，手链等成品首饰。
The main sales of Agoya, Nanyang, Tahitian pearl necklaces, rings, earrings, bracelets and other finished jewelry.

EIKO PEARL CO., LTD.

6.2C2-022

Address: 日本 Japan Mie-Tsu-10-10 Chuo
Tel: +81-59-227-5913
Email: katsumasa@eikopearl.com
Web: www.eikopearl.com

Our company has established in 1963. We have distributed our products to over 25 countries. Our main products are Japanese Akoya Pearl, South Sea Pearl, Tahiti Pearl.

香港千年翠钻珠宝集团有限公司

6.2C2-023

Address: 香港地区 HongKong China 香港-UNIT 05,7/F, BRIGHT WAY TOWER, NO.33 MONG KOK ROAD, KOWLOON, HK
Tel: 88432310
Email: 13683688888@139.com
Web:

Royal Color Trading Co

6.2C2-024

Address: 香港地区 HongKong China UNIT 509B,5F, TOWER A, HUNG HOM COMMERCIAL CENTRE, HUNG HOM,HONG KONG
Tel: +852 23662286
Email: royalcolorhk@gmail.com
Web:

We supply high-quality loose color stone and its jewelry pieces, including precious stone like emerald, sapphire, ruby, and semi-precious stone, for example, opal, tanzanite, cats eye, alexandrite. We have quite a lot of tanzanite stock in various size and shape, including no heat pieces and big size pieces, which is rare in the market. We also have some really good quality Emerald.

亨通利珠宝公司

6.2C3-003

Address: 泰国清迈市塔佩路在古玩珠宝城30档22号 Thailand 泰国清迈市塔佩路古玩珠宝城30档22号
Tel: 0755-82212142
Email: 857339971@qq.com
Web:

亨通利珠宝公司,是一家泰中合资现代化珠宝公司。公司以“永续经营、产业兴国”为经营宗旨，经过不断的管理变革与流程改进，今已经形成以身设计，开发为主的产品开发生产模式及具有自己独特风格的高品质多品类的产品体系。公司旗下有众多品牌:亨通利珠宝、利永贞珠宝、翡翠鸟珠宝品牌等...这些品牌深受新老顾客喜爱。

JEWELLERY MAKE CO., LTD.

6.2C3-006

Address: 日本 东京都-足立区栗原1-5-10 Japan TOKYO-1-5-10, KURIHARA, ADACHI-KU
Tel: (81)3-5242-2201
Email: shimizu@j-make.co.jp
Web: www.j-make.co.jp

公司主要以制作项链为中心，手工加工生产K18珠宝、珍珠珠宝、翡翠珠...等原创商品。
Mainly produces K18 jewelry, Pearl jewelry, Jadeite jewelry…etc, original products by handmade.

俄罗斯加里宁格勒拉维达有限公司

6.2C3-009

Address: 俄罗斯 Russia 加里宁格勒-俄罗斯
Tel: 18693101666
Email: 421332748@qq.com
Web:

香港协隆珠宝国际有限公司 / X.L JEWELRY INTERNATIONAL CO., LIMITED

6.2C3-001

Address: 香港地区 九龙旺角道33号凯途发展大厦7楼04室 Hong Kong China-FLAT/ RM 803 CHEVALIER HOUSE 45-51 CHATHAM ROAD SOUTH TSIM SHA TSUI
Tel: 18901669799
Email: 619652207@qq.com
Web:

协隆始于1990，协隆品牌注册于2007年，旗下有“协隆钻石进出口公司”“协隆 —— 香港国际珠宝公司”“协隆 —— 斯里兰卡矿产开发公司”曼谷 —— 协隆宝石切磨贸易公司“协隆现为中国上海钻石交易所成员（展位0301）经过几十年磨砺，现已成熟完成”从矿产到工厂，从工厂到市场的产业链模式，公司开发各种彩宝镶嵌成品首饰，以批发兼零售，为市场带来超高的珠宝品牌。

浙宝珍珠有限公司

6.2C3-004

Address: 香港地区 HongKong China
Tel: 852-28132431
Email: 2352365560@qq.com
Web:

GALERIA DUBIEL - 玛瑞娜.杜贝拉

6.2C3-007

Address: 波兰 Poland Warszawa-Al. Waszyngtona 24/14, 03-910 Warszawa, Poland
Tel: 0048228285272
Email: galeria@maryladubiel.com
Web: www.galeriadubiel.com www.maryladubiel.com

Unique, one of the kind amber jewellery combined with natural stones and pearls.

GEMBROS JEWELRY CO., LTD

6.2C3-010

Address: 韩国 首尔特别市-江南区江南大路146街 41, Queen's Ville ROK(Republic of Korea) Seoul Korea-Queen's Ville. 41, Gangnam-Daero 146-Gil, Gangnam-Gu
Tel: +82-2-517-5728
Email: gembros@gembros.co.kr
Web: www.gembros.co.kr/chi/ www.gembros.co.kr/eng

创立于1984年的韩国高级珠宝公司GEMBROS是韩国第一代的高级珠宝品牌。我们采用“One-Stop一站式服务系统”，从天然宝石采购进口，鉴定，产品设计，制作，到提供销售和售后服务。与其他同等价位的品牌相比，减少不必要的外包成本并利用成本差距，以更精致的工艺技术和更优质的宝石打造出完美顶级的珠宝作品。
Korean fine jewelry company "Gembros" was founded in 1984, and we are the oldest verified fine jewelry brand in Korea. Every jewelry presented by GEMBROS has been carefully designed as an art piece and hand-crafted by one of the best master artisans in Korea.

PAOLO PIOVIA GIOIELLI JEWELRY

6.2C3-002

Address: 意大利 Italy-Piazza Garibaldi, 4, 35122 Padova PD,
Tel: 13810498769
Email: sheamy921@hotmail.com
Web: www.paolopiovan.com

Paolo Piovan Gioielli 40多年来一直是一家成功的家族企业。
创始人Paolo Piovan被认为是意大利顶级珠宝商之一。
凭藉其强烈的个人品味和最优质的工艺，诞生了一系列备受赞誉的珠宝。
他的设计仅包括最高品质的宝石，每颗宝石都是完全手工制作，以满足最苛刻的客户。
Paolo Piovan Gioielli has been a successful family business for over 40 years.
Founder Paolo Piovan is considered one of the top jewelers in Italy.
With its strong personal taste and the highest quality craftsmanship, a series of award-winning jewellery has been born.
His designs include only the highest quality gems, and each jewel is completely handcrafted to meet the most demanding customers.

莹桦珠宝有限公司 / HUGO JEWELRY CO., LTD

6.2C3-005

Address: 香港地区 九龙油麻地广东道513-531号18楼，玉器交易广场 Hong Kong 18F, No513, Canton Road, Yau Ma Tei, Kowloon, Hong Kong (The Jade Plaza)
Tel: 18659200870
Email: hungyi@hugo.com.tw
Web: www.shiningshining.com.tw

AR GEMS

6.2C3-008

Address: 斯里兰卡 Sri Lanka western province-KALUBOWILA-288/12,1/1, TEMPLE ROAD, KALUBOWILA
Tel: 0112763119
Email: sahranabdul@argems.lk
Web:

AR Gems hails from a family with generations of gem merchants, thus have had a very early explosive to learning cutting, polishing and trading of gemstones.
Today, with the learnings and the vast industry experience the founders have established AR Gems to meet the rising trend of demands for gemstones from the island.

Kothari Trading (HK) LTD

6.2C3-011

Address: 香港地区 HongKong China Hong Kong-G.P.O. 469, Central
Tel: +852-2525-5003
Email: info@kothari.hk
Web:

We specialise in natural fancy color diamonds, rare precious gemstones including fine emeralds, rubies and sapphires and uniquely designed handcrafted jewellery. We provide customers an excellent quality and reasonably priced products. To ensure client satisfaction, we deliver an all-rounded sales and after sales services.

金福珠寶有限公司 / FOOK'S JEWELRY LTD

6.2C3-014

Address: 香港地区 TST, KLN-九龍尖沙咀麼地道67號半島中心7樓719室 Hong Kong China TST, KLN-UNIT 719, 7/F., PENINSULA CENTRE, 67 MODY RD.,
Tel: +852 2111-1210
Email: sales@fooksjewelry.com
Web: www.fooksjewelry.com

金福珠寶有限公司創辦於1970年，自成立以來，一直致力製造優質高級珠寶首飾。隨著環球時尚和市場發展趨勢，該公司以其獨有精湛設計、細緻手工、優質造藝和具吸引力的市場價格策略，業務已不斷拓展至成為一間具市場競爭力的出口珠寶公司。金福珠寶為一家揉合美學藝術及創新概念設計的珠寶製造商。
Founded in 1970, Fook's Jewelry has strived to manufacture high quality fine jewelry since its inception. Following the ever-changing global fashion and market trend, the company has progressively developed into a competitive player with stunning designs, meticulous workmanship and premium qualities.

HATAI JEWELRY CO.,LTD.

6.2C3-018

Address: 泰国 Thailand BANGKOK-BANGKOK-233/4-5 THIEMRUAMMIT RD., SAMSAEN-NORK, HUAY KWANG, BANGKOK 10310 THAILAND
Tel: +6626452000
Email: hataisilver@hotmail.com
Web:

雅钻黄金投资有限责任公司 / Gold invest Co.,Ltd

6.2C4-001

Address: 俄罗斯 Russia 俄罗斯萨哈（雅库特）共和国雅库茨克市奥尔忠尼基泽街38号
Tel: +7 (495) 6208507
Email: jianghong@yazuanchina.com
Web:

麗生珠寶 / LEGRAND JEWELLERY (MFG) CO., LTD.

6.2C3-012

Address: 香港地区 Outside of U.S./Canada-香港-紅磡鶴園街道11號凱旋工商中心3期5樓O座 Hong Kong China -Block O, 5/F., Kaiser Estate, Phase 3, 11 Hok Yuen Street, Hung Hom, Kowloon
Tel: 27657818
Email: marketing@legrandjew.com
Web: www.legrandjew.com

麗生珠寶有限公司，始創於 1986 年，是香港地区一間具信譽及實力的珠寶製造及出口商。過去三十年，麗生致力為香港地区及全球客戶提供專業優質的珠寶設計製作及鑲嵌服務。匠心獨運的工藝、專業的精神和待客以誠的服務，使麗生出品一直廣受客戶的青睞。
總部設於香港地区，另設生產線於國內，擁有超過250位員工。為了拓展服務業務，麗生在全球5個地區設有辦事處，將精湛的工藝帶到海外。
由戒指到耳環；頸鏈到手鏈，均由工匠精心自1980年代中期以來，麗生珠寶有限公司從事經典珠寶首飾的設計、開發和製造業務，是一家國際知名的稀有寶石珠寶系列製造商，並一直遵循其商標。公司設有先進的珠寶工廠，聘用250名經驗豐富的工匠，用人手以金和鉑金製造所有複雜的藝術珠寶首飾。麗生目前在全球設有五個辦事處，數十年來在環球市場取得成功，憑藉精湛的設計和工藝，獲得眾多客戶的青睞。

SUNG GEMS CO., LTD.

6.2C3-015

Address: 泰国 Thailand CHANTHABURI-MUANG-35/3-6 MOO7, THREERAT ROAD, CHANTHANIMITS, MUANG, CHANTHABURI 22000 THAILAND
Tel: +66 64 241 6195
Email: sunggems@gmail.com
Web:

FUYUANXUAN JEWELLERY(HK)CO., LIMITED

6.2C3-019

Address: 香港地区 HongKong China FLAT/ RM704 7/F BRIGHT WAY TOWER 33MONG KOK ROAD MONG KOK
Tel: 00852—27935511
Email: 1019258777@qq.com
Web:

湖棠珠宝有限公司

6.2C4-002

Address: 香港地区 HongKong China 香港-红磡-Q11，6/F 凱旋工商中心三期，11號鶴園街
Tel: 020-30063106
Email: wilson@hutang.com.cn
Web:

湖棠珠宝专注于彩色宝石镶嵌类首饰，以多种类多色彩的宝石为年轻人点缀出他们的青春活力。湖棠珠宝拥有独立的设计部门，为迎合市场需求，每件产品的设计，均出自国内设计新秀之手，经过顶尖的设计大师的指点，修正后，由珠宝工艺艺人工作室匠心出品。本公司目前主开发款式以轻奢，年轻化为特点，产品主要为925银饰和18K金首饰，搭配色彩缤纷的彩宝，主力瞄准已成为市场消费主力的80后和逐渐提升消费力的90后人群。

文轩设计有限公司 / Loft Design Company Limited

6.2C3-013

Address: 香港地区 HongKong China Flat J, 9/F Haribest Industrial Building 45-47 Au Pui Wan Street, Shatin, Hongkong
Tel: +852-62821165
Email: loftdesignc@gmail.com
Web:

M.A. CREATION CO., LTD.

6.2C3-016

Address: 泰国 Thailand BANGKOK-BANGRAK-276/12-13 Silom Rd. Suriyawongse 10500
Tel: +6622688122-7
Email: macrt.bkk@gmail.com
Web:

DER MOND (THAILAND). CO., LTD

6.2C3-017

Address: 泰国 Thailand BANGKOK-BANGKOK-55 SEACON SQUARE BUILDING , ROOM31075 , G FLOOR SRINAKARIN RD. , PRAWATE, 10250
Tel: +66906641464
Email: dolly@dermond.co.th
Web:

Kimberley Diamond and Jewellery Incubator

6.2C3-020

Address: 南非 South Africa Northern Cape-Kimberley-25 Villers Street
Tel: 0027 538311570
Email: angelique@kdji.org
Web:

We are from South Africa specialising in diamond cutting and polishing and jewellery manufacturing.

REAL CRYSTAL CO LTD

6.2C4-003

Address: 泰国 Thailand THAILAND-BANGKOK-919/517, 44TH FLOOR, JEWELRY
Tel: +662-2356300
Email: RAJORIAJEWELS@YAHOO.COM
Web:

MANUFACTURERS AND WHOLESALER OF FINE QUALITY PRECIOUS AND SEMI-PRECIOUS GEMSTONES

VANDA (THAILAND) CO., LTD.

6.2C4-004

Address: 泰国 Thailand AYUTTHAYA-126 G103-105, MOO3 BF-27 KUANGSUANPOO, AYUTTHAYA, 13000 THAILAND
Tel: +66802894625
Email: vandaken@gmail.com
Web:

ASIA ONE TRADING CO.,LTD

6.2C4-005

Address: 泰国 Thailand BANGKOK-70 SOI INDRAMARA 21, SUTHISARN RD. KWANG SAMSENNAI PHAYATHAI, BANGKOK, THAILAND 10400
Tel: +66 81 6962626
Email: tresorthailand@gmail.com
Web:

SUPARNO JEWELRY CO., LTD.

6.2C4-006

Address: 泰国 THAILAND-BANGKOK-98/136 RAMKHAMHAENG 94, SUPHANSUNG, BANGKOK 10240 Thailand BANGKOK-98/136 RAMKHAMHAENG 94, SUPHANSUNG, BANGKOK 10240
Tel: +6621113113
Email: suparnojewelry@gmail.com
Web:

ANAMIKA (THAI) GEMS CO., LTD.

6.2C4-007

Address: 泰国 Thailand Bangkok-Bangrak-306, POONMANEE BLDG., 30-36 MAHESAK ROAD SOI 3, SURIWONG BANGRAK,
Tel: +6626358079
Email: murphybkk@hotmail.com
Web:

创艺珠宝集团有限公司

6.2C4-008

Address: 香港地区 HongKong China 九龙油麻地
Tel: 13723764560
Email: sageambrer@sageaber.com
Web: www.sageamber.com

创艺珠宝集团有限公司主要经营波兰进口的波罗地海天然琥珀产品，并取得了欧洲最大琥珀连锁品牌“S&A”的中国区独家代理。“S&A”琥珀在英国、德国、法国、西班牙、丹麦、希腊、美国、加拿大都有连锁店，“S&A”旗下汇集欧洲著名珠宝工匠,优质的琥珀选材，精湛的镶嵌工艺，简约时尚的设计，成为琥珀行业中的佼佼者。

巴西爱美丽珠宝首饰有限公司

6.2C4-010

Address: 巴西 Brazil Avenida são Paulo Le conte Tang Yan 12103
Tel: +552297993729
Email: 412442522@qq.com
Web:

巴西爱美丽首饰有限公司主要经营时尚首饰加工、设计、销售业务,品种繁多，款式新颖独特，独具时尚品味，产品涵盖吊坠、耳环、戒指、手链、项链、脚链、手镯,服饰配件等,产品采用施华洛世奇,巴西黄水晶、紫水晶、玛瑙玉自然元素，产品畅销全球。

COSTRUENDO S.R.L.

6.2C4-011（01）

Address: 意大利 Italy CREMA(CR)VIA L.CHIODO 8 CAP 26013
Tel: +8613817825499 / +862152992875
Email: Gary.gong@jardincouture.com helen.chen@jardincouture.com
Web:

COSTRUENDO S.R.L. was registered in Milano, Italy.
The company was dedicated to promote Italian jewelry, including Vintage jewelry to global market, focusing on high end pieces and design pieces.
We have been deeply involved in main jewelry activities in Mid-East and Far East Asia.

LUCE CONCEPT SRL

6.2C4-011（02）

Address: 意大利 Italy PARMA(PR)BORGO DEGLI STUDI 11 CAP 43121
Tel: +8613817825499
Email: Gary.gong@jardincouture.com
Web: www.v-tier.com alinebassani.com

LUCE CONCEPT SRL has registered in Parma, Italy. Its key product line, Aline Bassani is fashion silver jewelry, with special craftmanship of Italian style. All products are hand made. The products has been well distributed within Asia market especially South East Asia.

Seven Star (Hongkong) Diamond Company Limited

6.2C4-011(03)

Address: 香港地区 HongKong China KL-Flat 2015,12F,4 Hok Yuen Street East Hung Hom
Tel: +8613482596919
Email: Gary.gong@jardincouture.com
Web: www.v-tier.com

Hongkong Seven Star Diamond is a professional diamond trading and retail company, set up in 2010, it leverage the deep relationship with sightholders and global diamond resource, to provide the best product to Great Chinese customers.

爱麗絲珠寶集團(香港)有限公司 / ALICE JEWELRY GROUP (HK) CO., LIMITED

6.2C4-012

Address: 香港地区 HongKong China 九龍紅磡鶴翔街8號維港中心2座205室
Tel: 18689221582 / 008675522203699
Email: 777@alicejewelry.com
Web:

爱丽丝珠宝集团(香港)有限公司是一家集宝石矿山投资、珠宝设计研发、生产加工、品牌连锁、互联网销售为一体的大型珠宝集团,主营钻石、彩色宝石、K金首饰、时尚腕表等多个产业。总部设立于香港地区，集团下设深圳南区运营中心、东区运营中心、西区运营中心、北区运营中心、中区运营中心，公司还在美国、欧洲等地设立了产品研发中心，旗下拥有多名国际知名珠宝设计大师。爱丽丝(ALICE)珠宝集团倡导“日行一善”理念，做有情有爱之人。慈善公益事业深入到企业每个员工，很多员工被政府相关部门评为优秀志愿者。爱丽丝(ALICE)珠宝既是传递“爱与美”的品牌，也是担当一份社会责任的爱心企业。

KGK DIAMONDS (HK) LTD

6.2C5-001（01）

Address: 香港地区 HongKong China 18/F PENINSULA SQUARE, 18 SUNG ON STREET, HUNGHOM
Tel: 021-61002808
Email: fang.sun@kgkmail.com
Web:

Established in 1905, KGK has enriched and enlightened people with their world of Gems, Jewelry, Diamond and Real Estate. Having operations in 17 countries they have an integrated supply chains from mines to brands.

KGK GEMS (HK) LIMITED

6.2C5-001（02）

Address: 香港地区 HongKong China 18/F PENINSULA SQUARE, 18 SUNG ON STREET, HUNGHOM
Tel: 021-61002808
Email: fang.sun@kgkmail.com
Web:

Established in 1905, KGK has enriched and enlightened people with their world of Gems, Jewelry, Diamond and Real Estate. Having operations in 17 countries they have an integrated supply chains from mines to brands.

KGK JEWELLERY (HK) LIMITED

6.2C5-001（03）

Address: 香港地区 HongKong China 18/F PENINSULA SQUARE, 18 SUNG ON STREET, HUNGHOM
Tel: 021-61002808
Email: fang.sun@kgkmail.com
Web:

Established in 1905, KGK has enriched and enlightened people with their world of Gems, Jewelry, Diamond and Real Estate. Having operations in 17 countries they have an integrated supply chains from mines to brands.

Tache Asia Ltd

6.2C5-002

Address: 香港地区 HongKong China Hongkong-405, 4F Peter Building 58-62 Queen's Central
Tel: 075525795516
Email: vickyyang12@hotmail.com
Web: www.tachechina.com

Tache Asia Ltd为比利时塔斯Tache Diamond N.V在中国的钻石销售，塔斯钻石公司为全球知名的高品质钻石生产供应商，作为钻石行业高级领导者，公司定位于高端钻石市场，对于钻石毛坯的品质，切工的要求更甚于钻石的颜色和净度，行业内誉为：“顶级钻石的全球通用词汇”，全球各大国际顶级珠宝品牌的长期供货商，为全球私人投资、收藏钻石的首选公司。

Elegance Jewellery International Ltd

6.2C5-003

Address: 香港地区 HongKong China 19th Floor, The Cameron, 33 Cameron Road, Tsim Sha Tsui, Kowloon, Hong Kong
Tel: 85223110511
Email: marketing@eji.com.hk
Web: www.eji.com.hk

Elegance Jewellery International Limited established in 1991, formerly known as“Elegance Jewellery Design & Manufacturer Company”. In 2005, EJI® was registered as our company trademark.
EJI® has earned the reputation as a trustworthy supplier of high quality and reasonably priced jewellery. Customers' trust is the best award and most valued success for the company,

CHINA EUROPE JEWELLERY CENTRE LTD

6.2C5-004

Address: 英国 United Kingdom London-London-Floor G, 101 Sutherland Avenue
Tel: 0512-67278803
Email: gf@sz-matro.com
Web:

China Europe Jewellery Centre Ltd, established in March 2016. The Company mainly focus on two sectors in jewellery, design and creative industry, one is self-operational brand ISABELLA LIU; another is consultancy business.

THE ARKENSTONE

6.2C5-005

Address: 美国 United States of America TX-RICHARDSON-3301 ESSEX DRIVE
Tel: 1-469-8316267
Email: ROB@IROCKS.COM
Web: www.irocks.com

THE WORLD'S LARGEST SUPPLIER OF FINE MINERAL SPECIMEN TO COLLECTORS AND MUSEUMS, CONSULTING TO MUSEUMS IN USA AND CHINA.

YONG TAI GEMS CO.,LTD

6.2C5-006

Address: 泰国 Thailand Bangkok-919/288 22Nd FL, Jewelry Trade Center Silom19 Silom Rd, Bangrak
Tel: +662 6301101-2
Email: yongtai288@yahoo.com
Web:

Our company opened since 1997 We have both gems and jewelry products. We offer a overwhelming and first hand shopping experience of Gems and jewellery to our customers from all over the world.

日本王朝株式会社

6.2C5-007

Address: 日本 Japan 东京-东京-豊岛区北大塚三丁目34番1号
Tel: 13818710688
Email: 624495189@qq.com
Web:

本公司主营彩宝、钻石、珠宝等加工批发及零售业务。欢迎莅临本展位参观交流。

香港紫杏琳珠宝国际股份有限公司 / HONG KONG ZI XING LIN JEWELRY INTERNA SHARE LIMITED

6.2C5-008

Address: 香港地区 HongKong China UNIT C, 6/F, HUA CHIAO COMMERCIAL CENTRE 678 NATHAN ROAD MONG KOK KOWLOON
Tel: 0755-25787610
Email: 1030574883@qq.com
Web: www.zixinglin.com

紫杏琳珠宝国际公司是一家专注于经营高端翡翠和精品和田玉的综合公司，秉承“爱”的核心价值，公司确立了“爱玉，爱人，爱玉人”的核心价值观，精心将每一块玉料的美发挥到极致，服务于每一位爱玉人士。

NANIS ITALIAN JEWELS S.r.l

6.2C6-001

Address: 意大利 Italy TRISSINO-VIA DEL LAVORO, 33, 36070
Tel: 13917617274
Email: vividyeung@ricogems.com
Web: www.nanis.it

1990年创立于维琴察的NANIS珠宝将现代风格注入意大利珠宝的古老艺术中，工艺与设计，激情与品味，奢华与创新，蕴含着一丝不苟的对细节与品味价值的追求，使NANIS珠宝成为独特的珠宝。ONE JEWELRY将NANIS珠宝引入中国，ONE JEWELRY是欧美进口原创珠宝设计集合，网罗全球珠宝设计师，甄选不同风格原创设计精品，打造多品牌、多风格、全渠道的国际同步化设计师平台，为中国消费者带来独具个性与艺术创造的时尚空间。

天使之泪珍珠(国际)有限公司 / ANGEPERLE (INTERNATIONAL) CO., LIMITED

6.2C6-002

Address: 香港地区 HongKong China 九龙尖沙咀漆咸道南39号铁路大厦9楼905室
Tel: 0575-87687178
Email: 297327897@qq.com
Web:

Guild Co.Limited

6.2C6-003

Address: 香港地区 HongKong China 香港九龙尖沙咀东麽地道61号冠华中心7楼703室
Tel: (86) 4008866175
Email: heidi.zhao@guildgemlab.com cc.chen@guildgemlab.com
Web: www.guildgemlab.com

美国GUILD(吉尔德)宝石实验室，成立于1980年，总部位于美国洛杉矶，由美国宝石学家Mr. Charles Carmona创立。在彩色宝石鉴定、分级、产地研究等方面具有丰富的经验、完善的基础数据和深厚的学术研究背景。
GUILD在洛杉矶、香港、深圳设有实验室，实验室的技术团队由Mr. Charles Carmona和多名行业内资深的宝石学家组成

純翠珠寶(香港)有限公司 / ChunCui Jewelry (Hong Kong) Co., Limited

6.2C6-004

Address: 香港地区 香港九龙旺角道33号 凯途发展大厦7楼四单元 Hong Kong China UNIT 04,7/F, BRIGHT WAY TOWER, NO.33 MONG KOK ROAD, KOWLOON
Tel: 86 21 61630685
Email: info@chuncuizhubao.com
Web: www.chuncuizhubao.com

MOONLIGHT PEARL (INTERNATIONAL) LTD

6.2C6-005

Address: 香港地区 HongKong China Flat E, F/8 Windsor Mansion 29-31# Chatham Road South T.S.T.
Tel: 00852-23678189
Email: info@moonlightpearl.com
Web: www.moonlightpearl.com

The company has been engaged in jewelry business for 25 years, Mainly engaged in pearl jewelry processing and sales.

PRESTIGE JEWELLERY MFR LTD

6.2C6-006

Address: 香港地区 Hong Kong China KOWLOON-10/F SURSON COMM BLDG, 142 AUSTIN ROAD
Tel: 852-2369-6255
Email: pjewelry@netvigator.com
Web:

ESTABLISHED IN 1979, PRESTIGE JEWELLERY MANUFACTURER LTD. IS A MANUFACTURER AND EXPORTER OF PLATINUM, 18K YELLOW AND 18K WHITE GOLD FINE JEWELLERY SET WITH PRECIOUS AND SEMI-PRECIOUS STONES.

BLESSED TRADERS

6.2C6-007

Address: 乌干达 Uganda 非洲-坎帕拉-P. O.BOX 3612
Tel: 15701239903
Email: 418785249@qq.com
Web:

BLESSED TRADERS, established in 2007, specializes in African crystal stones, African jewelries, the company deals in mining and exporting Natural stones and jewelries from Africa, particularlly Uganda, where the head office is located. The company is dedicated to serve the world with Natural products.

莱思嘉(香港)设计有限公司 / LEVIN SCARLETT(HK)DESIGN COMPANY LIMITED

6.2C6-008

Address: 香港地区 香港干诺道西20号中英大厦14楼1402室 Room 1402,14th fioor, Sino-British Building,20 Connaught Road West, Hong Kong China
Tel: 020-37598381
Email: 6594026@qq.com
Web: www.lscarlett.cn

集合国内外专业设计师,汇集国际舞台优质设计师资源,展现独具匠心的珠宝首饰设计。

Maung Maung San Gems & Jewellery

6.2C6-009

Address: 缅甸 Myanmar 11141-Yangon-No. (182/184) Shwe Bhone Thar, Middle Street
Tel: 09422663329
Email: heinwinsan7898@gmail.com
Web:

Maung Maung San Gems & jewellery, is an Myanmar based gemstones company which deals in, Precious and Semi-Precious Stones, which includes calibrated as well as Rough Stones.

鼎立珠寶實業有限公司 / EUREKA JEWEIIERY COMMERCE & INDUSTRY COMPANY LIMITED

6.2C6-010

Address: 澳门地区 澳門漁翁街166號永好工業大廈五樓C座 Macao Block C, 5th Floor, Yonghao Industrial Building, No.166 Yuwen Street, Macau
Tel: 14714941564
Email: eureka@eurekagroup.com.mo
Web: www.eurekagroup.com.mo

鼎立珠宝实业有限公司成立于2017年,为一所由3名澳门人全资拥有的本地企业,亦是现时唯一一家将整条珠宝首饰从研发、设计、加工制作于一体的生产线工厂设于澳门的企业,旗下品牌EUREKA已于本澳作商标注册。本企业定制高级珠宝首饰为主,特色有:自主研发新型钛金属首饰、雕刻珠宝定制、钛 金结合等创新设计工艺等。

Established in 2017, Dingli Jewelry Industrial Co., Ltd. is a local company wholly owned by three Macao people. It is also the only production line factory that integrates the whole jewellery from R&D, design and processing in Macao. The company, its brand EUREKA, has registered trademarks in Macao.

Louis & Company / Louis ET CIE, LLC

6.2C6-011

Address: 美国 United States of America California 90211-Suite 4010 Beverly Hills-256 South Robentson Blud
Tel: 13818979070
Email: julia_liu04@qq.com
Web:

香港方圆珠宝有限公司 / Hong Kong Round Square Jewellery Co.,Ltd

6.2C6-012

Address: 香港地区 香港铜锣湾记利佐治街1号17楼1703室 Rm 1703 17/F 1 Great George Street Causeway Bay HongKong China
Tel: (8621)63375398 / (852)28953381
Email: jerry@fygem.com
Web: www.fygem.com

方圆珠宝公司是20多年的批发商、进出口商、制造商,专营18k金钻石、翡翠、红蓝宝石等高档珠宝首饰。主要是中国市场,占80%,其他是东南亚,新加坡、马来西亚、泰国。产品类型方面,戒指耳环各占40%,吊坠占10%,项链、手镯占10%。

With over 20 years of experience, Round Square Jewellery Limited is a manufacturer and exporter of 18k gold fine jewellery, specializing in jades, diamonds, rubies and sapphires products. The major market is the China which occupies 80%; the remaining is split among , Malaysia, Singapore and Thailand.

Rings and earrings account for 40% respectively, pendants for 10%, necklaces and bracelets .

元亨(香港)珠宝首饰有限公司 / Yuen Hang (HK) Jewellery Co.,Limited

6.2C6-013

Address: 香港地区 KOWLOON-TSIM SHA TSUI-尖沙咀广东道28号力宝太阳广场1412 Hong Kong China KOWLOON-TSIM SHA TSUI-UNIT12, 14/F, LIPPO SUN PLAZA, 28 CANTON ROAD
Tel: 021-61600103
Email: sherlock_zhu@shixi-intl.com
Web:

缘与美有限公司 / YUAN AND BEAUTY COMPANY LIMITED

6.2C6-014

Address: 香港地区 新界-元朗-白沙村1A Hong Kong China New Territories-yuen long-1A of Baisha village
Tel: 0755-25177752
Email: hh@yymjewelry.com
Web: www.yymjewelry.com

BETTER ARTS GROUP CO., LTD.

6.2C7-001

Address: 泰国 Thailand 泰国-曼谷-75/78 MOO 11 KLONGNUENG KLONGLUANG PATHUMTHAMI
Tel: 662 5296797
Email: 770744139@qq.com
Web: www.5ivesis.com

泰国佛历2446年(1903年) 曼谷第一家金店的开业,开启了"ROYAL FIVES"艺术彩宝的传奇之旅。无论是复古奢华,还是新潮时尚,意大利顶级设计团队根据每一颗高品质天然宝石量身设计,由泰国皇家工匠和意大利资深工匠手工制作而成的每一件珠宝,都是独一无二的艺术品,充分展示每位女性所独有的高贵、优雅、神秘、性感的迷人魅力,经得起时光的考验,值得珍藏。

FINE JEWELLERY

6.2C7-002

Address: 缅甸 Myanmar 1101-Yangon-A(1/2), Gems Museum & Mart,Myanmar Gems Trade Center
Tel: 9595014142
Email: heinwinsan7898@gmail.com
Web:

Founded by Mrs.Moth Moth, the Director of the company in 1978 and headquartered in Myanmar, Yee On (Group) Limited Myanmar is a conglomerate specializes in processing and marketing gems, pearl, jewellery and ornament, development of industry and real estate, and operation of hotels and resturants.

SHWE LAMIN JADE & JEWELLERY

6.2C7-003

Address: 缅甸 Yangon-Yangon-104, Nawarat Shed, Bogyoke Aung San Market, Myanmar Yangon-Pabedon Township -104, Nawarat Shed, Bogyoke Aung San Market,
Tel: 951397686
Email: kanhtoomg@gmail.com
Web:

Operating since the last thirty years, based in Yangon, Myanmar. We sell natural Jadeite Jade, Ruby, Sapphire, Garnet, Tourmaline, Pearl, Amber and woods.

Mega Bucks Jewellery

6.2C7-004

Address: 缅甸 Yangon-Pebaedan Township -No.139,Nawarat Building, Bogyoke Aung San Market Myanmar Yangon-Pebaedan Township -No.139,Nawarat Hall, Bogyoke Aungsan Market
Tel: +9595112377
Email: khinhtayee9388@gmail.com
Web: nil

1) Total about 10 times of CAN EXPO
2) CHINA INTERNATIONAL IMPORT EXPO

Gruentee-direkt

6.2C7-005

Address: 德国 Germany Maselheim-Lorenz-Hagel-Weg 9
Tel: 00491639879718
Email: youjidaren@qq.com
Web:

GTD JEWELRY是一家成立于2011年的德国珠宝贸易公司。公司主要业务。
1. 整合欧洲各大珠宝商宝石信息库,搭建中欧珠宝商及个人的桥梁,为顾客提供各种珍贵宝石,有机宝石,收藏类宝石(老蜜蜡,稀有珠宝品种等)。
2. 自主设计可持续发展珠宝首饰。
3. 开发,代理,销售欧洲独立设计师设计首饰。
4. 组织珠宝文化之旅。
本公司诚信守业,欢迎洽谈咨询。

香港紫合門珠寶有限公司

6.2C7-006

Address: 香港地区 HongKong China 香港灣仔駱克道315-321號駱基中心23樓C室
Tel: +85223662286
Email: royalcolorhk@gmail.com pangszeman1010@gmail.com
Web:

HONGKONG PENELPE LIMITED / HONGKONG PENELOPE LIMITED

6.2C7-009

Address: 香港地区 HongKong China FLAT/RM D 9F 8HART AVENUE
Tel: 0852-27795005
Email: johnlincn@126.com
Web:

香港沛辰有限公司 主要经营各类高端珠宝,范围包括钻石,红蓝宝石,祖母绿,翡翠。

MULTIWORLDGEMS MANUFACTORY CO.,LTD

6.2C7-007 6.2C4-009

Address: 泰国 Thailand BANGKOK-352/21-23 SOI-KRUNGTHONBURI 4, KRUNGTHONBURI Rd., BANGLAMPHULANG, KLONGSAN
Tel: 13715296117
Email: multiworldgems@hotmail.com
Web: www.multiworldgems.com/thailinsgems

香港好美实业有限公司

6.2C7-008

Address: 香港地区 HongKong China 九龍紅磡馬頭圍道37-39號紅磡商業中心B座13樓08室
Tel: 0755-82327877
Email: 2355957586@qq.com 2355614346@qq.com
Web:

香港好美实业有限公司(以下简称好美珠宝)注册资金2000万元,公司面积1000多平方米,员工100余人,年营业额达上亿元以上。主营:珠宝设计研发、高级定制、加工生产,现货批发等。好美珠宝多年来遵循"用心为客户缔造每一枚珠宝"的经营理念,赢得了业内珠宝品牌零售商的高度认可。

勇展珠宝有限公司 / Y C Jewelry Limited

6.2C7-010

Address: 香港地区 九龙-红磡-马头围道37号红磡商业中心B座11楼1107室 Hong Kong China Kowloon-Hunghom, -Room 1107, 11/Floor, Tower B, Hunghom Commercial Centre, No.37 Ma Tau Wai Road
Tel: +85223832119
Email: karl@yc-jewelry.com
Web:

勇展珠宝有限公司,拥有超过30年在珠宝首饰制造的历史。在不断反复的工艺练习下,让我们明白如何把客人的希望和要求,在首饰上面活现出来。

Our mission is to offer the best quality of merchandises at a competitive price and proper lead time.

SEIN SHWE PHOO JEWELLERY

6.2C7-011

Address: 缅甸 Myanmar Yangon -Pabedan Township -No.3/4/25,Nawarat Building,Bogyoke Aung San Market
Tel: +9595165765
Email: pinpin201080@gmail.com
Web: seinshwephoojewellery(facebookpage)

1) 10th CAEXPO
2) 11th CAEXPO
3) 12th CAEXPO
4) 13th CAEXPO
5) 14th CAEXPO
6) 15th CAEXPO
7) 1st WENZHOU INTERNATIONAL IMPORT EXPO
8) 1st CHINA INTERNATIONAL IMPORT EXPO (CIIE)
9) 7th MACAO INTERNATIONAL TRAVEL (Industry) EXPO
10) GUANG DONG & MACAO BRANDED PRODUCTS FAIR

思潼国际珠宝有限公司 / IN-STONE INTERNATIONAL JEWELRY LIMITED

6.2C7-012

Address: 香港地区 九龙油麻地窝打老道19号致富商业大厦7楼 Hong Kong China 7/F., Gee Foo Commercial Building 19 Waterloo Road, Kowloon
Tel: 852-23885107
Email: mk@xsfjewelry.com
Web: www.xsfjewelry.com

思潼国际近年来以首饰设计风尚的精准把控、珠宝产品的精湛工艺殷勤地，多次征服业界和消费者。设计的每一款首饰都与主题工艺遥相呼应蕴含创新精神、代表卓越工艺，直抵灵魂深处。
In-Stone International Jewelry Ltd. In recent years,its design and products as well as precise control of the craft always conquer both the industry and consumers.Each piece of jewelry design and a theme echoed the process,which represents the spirit of innovation,superior technology,straight to her soul.

BETA DIAMONDS LTD.

6.2C7-017

Address: 以色列 Israel RAMAT-GAN-ISRAEL DIAMOND EXCHANGE TOWER, 15TH FLOOR, ROOM 69-75 3A, JABOTINSKY STREET,
Tel: +8618402108620
Email: 348714605@qq.com
Web: www.betadiamonds.com

Beta Diamonds LTD. is a polisher and exporter of diamonds all over the world with offices in USA/ HK/ Israel and Shanghai.

Sunny Creations Ltd

6.2C7-020

Address: 香港地区 HongKong China Select-Suite 1003-4, 10/F, Hilder Ctr 2 Sung Ping St
Tel: 23346837
Email: kurtis@sunnycreations.com.hk
Web: www.sunnycreations.hk/en

株式会社 大月真珠

6.2C8-001

Address: 日本 Japan 兵库-神户-中央区港岛中町6-4-1
Tel: +81-783032115
Email: exp@otsuki-pearl.co.jp
Web: www.otsuki-pearl.com/sc/index.html

大月真珠为日本最大的珍珠半成品批发公司。专业经营日本海水珠阿古屋珍珠（Akoya Pearl），南洋金珠，澳大利亚白蝶珠及大溪地黑蝶珠。

COLOR KING CO.,LTD

6.2C7-013

Address: 泰国 Thailand bangkok-282-282/1-2 silom soi22/1, silom rd., bangrak
Tel: 022375550
Email: poommaechanwinery@gmail.com
Web:

PT. Inlove Jewellery Trading

6.2C7-015

Address: 印度尼西亚 Indonesia Jakarta-Jakarta Selatan-Satrio Tower LT.6 Unit.1
Tel: 075522352581
Email: jitianyue0818@gmail.com
Web:

公司主营天然南洋珍珠裸珠和镶嵌饰品

ISHITOMO CO., LTD

6.2C7-018

Address: 日本 Japan 山梨县-甲府市-川田町 ARIA106
Tel: +81 552201711
Email: kan-bun2@ishitomo.co.jp
Web: www.ishitomo.co.jp

株式会社石友，始创于1969年，本社位于日本山梨县。为日本众多知名珠宝企业提供珠宝生产制作服务，同时，自创品牌珠宝，历经10年研制出可促进健康的珠宝MO-1系列，颇受好评。坚持珠宝业界少有的「一站式生产线」方式，将「日本制造」推广到全世界。参加日本，香港各大珠宝展，拥有睡美人绿松石，红蓝宝，祖母绿等等。

Sebian Jewelry

6.2C7-021

Address: 韩国 ROK(Republic of Korea) Seoul-#303, 29, Donhwamun-ro 11-gil, Jongno-gu
Tel: 82-2-747-3898
Email: freehye@naver.com
Web: instagram:sebian_jewelry

Founded in Seoul, Korea in 2000 by Dr. Eunae Kim.
Our passion for jewelry making blends traditional and modern aesthetics into works of art.
We strive for quality, originality and timeless sophistication in every collection we create leaving a lasting impression.

AAA GEMS & JEWELRY CO

6.2C7-014

Address: 香港地区 HongKong China Flat A, 10/F, Lagun Verde Tower 8, 8 Laguna Verde Avenue, Hunghom, Kowloon
Tel: 852-27241273
Email: sales@dyach.com
Web:

ADI IMPEX(HK)LIMITED

6.2C7-016

Address: 香港地区 HongKong China Hong Kong-905, 9/F, Hart Avenue Plaza, 5-9 Hart Avenue,Tsim Sah Tsui, Kowloon, Hong Kong
Tel: +86 18657701849
Email: 370319576@qq.com
Web:

AKASAKA UNIBASE INC / 株式会社赤坂UNIBASE

6.2C7-019

Address: 日本 Japan 5-21-14Ueno, Taito-ku, Tokyo, Japan
Tel: 81368678800
Email: 512138823@qq.com
Web: akasaka-unibase.jp

Hypersymmetrics (Luxembourg) sarl

6.2C7-022

Address: 卢森堡 Luxembourg Luxembourg-1219 Luxembourg-23, Rue Beaumont
Tel: +352 471817-444
Email: info@hypersymmetrics.com
Web: www.hypersymmetrics.com

Graphic Art - Sculptures - Jewellery by Jens W. Beyrich

CAPTAIN CORPORATION

6.2C8-002

Address: 日本 Japan 6F TBM KOBE BLDG, 1-1, 4-CHOME, GOKO-DORI, CHUO, KOBE, 651-0087 JAPAN
Tel: 02163333883 / 021-63333883
Email: nancy.yang@shjiheng.com.cn
Web:

CAPTAIN CORPORATION2005年成立于日本神户。主要从事各类贵金属珠宝的出口和销售。神户作为日本最早开放对外国通商的五个港口之一，推进了日本珍珠事业的发展，使AKOYA珍珠走进世界人民的视野。在1919年日本养殖珍珠的品质得到了世界的认可！神户珍珠贸易繁盛，聚集了世界上70%的海水珍珠（其中不仅包括日本海产AKOYA珍珠，还有南洋，大溪地，半圆珍珠等）。
CAPTAIN CORPORATION2005年成立于日本神户。主要从事各类贵金属珠宝的出口和销售。神户作为日本最早开放对外国通商的五个港口之一，推进了日本珍珠事业的发展，使AKOYA珍珠走进世界人民的视野。在1919年日本养殖珍珠的品质得到了世界的认可！神户珍珠贸易繁盛，聚集了世界上70%的海水珍珠（其中不仅包括日本海产AKOYA珍珠，还有南洋，大溪地，半圆珍珠等）。

OTT Gallery

6.2C8-007

Address: 韩国 ROK(Republic of Korea) Seoul-1F, 632-13, Irwon-dong, Gangnam-gu
Tel: +8223533953
Email: dicoi@naver.com
Web: www.ottgallery.co.kr

OTT Gallery是将韩国传统工艺漆画的传统美及各种技法和现代生活用途相结合，开发设计的产品品牌。
本公司通过传统与现代的完美结合，生产出既有艺术价值又有作为生活用品，文化商品，饰品，珠宝产品的使用价值的丰富多样的产品
All of the OTT Gallery's products are handicraft items which are emphasized with sentiment of the Orient in addition to being highlighted with the natural beauty of the natural gemstones.

Jewel & co

6.2C8-010

Address: 韩国 ROK(Republic of Korea) 韩国忠清北道忠州市城西8路30-1
Tel: 0082-43-845-5543
Email: 2414435668@qq.com
Web:

原创设计珠宝品牌。采用18k金手工精工镶嵌国内还不普遍用的彩钻，设计出时尚而独特的首饰，服务于追求与众不同设计的客户。

SANTYS.CO.,LTD

6.2C8-003

Address: 日本 Japan NAGOYA-SHOWAKU-FUKUE2-9-28-702
Tel: 0528843101
Email: suiru-y@xj9.so-net.ne.jp
Web:

Takii Co.,Ltd

6.2C8-005

Address: 日本 Japan Hyogo-ken-Ashiya-shi-11-6 Ohhara-cho
Tel: +81797-31-3459
Email: takii1030@yahoo.co.jp
Web: www.takii.biz

We are a company's 50th anniversary in Kobe Ashiya. We wholesale products to Japan'sSogo department store and Seibu Department store.We are in commemoration of the 50th anniversary this year.

SHIN SE GAE CO

6.2C8-008

Address: 韩国 ROK(Republic of Korea) SEOUL-#30, 4F, SAMHOWOOJOO BLD, 45-4, NAMDAEMUNSIJANG-GIL, JUNG-GU
Tel: 82-2-3185656
Email: ssg925@naver.com
Web:

JEWEL JINYONG

6.2C8-011

Address: 韩国 ROK(Republic of Korea) Busan-15-1, Gold thema-gil, Busanjin-gu
Tel: +82-51-645-3450
Email: jeweljinyong.official@gmail.com
Web: www.jeweljinyong.com

JEWEL JINYONG is one of the leading jewelry manufacturer, wholesaler and exporter in korea. The unique and beautiful design received rave reviews form overseas prior to local market. We will do our best to offer high-quality jewelry for all demands with competitive products and reasonable price.

ネオ・クラフト / neo.craft

6.2C8-004

Address: 日本 Japan 山梨県-甲斐市西八幡-4034
Tel: 81552765357
Email: neo@neocraft.jp
Web:

GLORY.CO.,LTD

6.2C8-006

Address: 日本 Japan TOKYO-UENO-No.6 KYORITU BLDG 6F, 5-7-8, TAITO-KU
Tel: +81-33839-2813
Email: glory@g-glory.jp
Web:

Established in 1980 is a jewelry distributor. Currently, it mainly sells diamond jewelry.

IS&J Co., Ltd

6.2C8-009

Address: 韩国 ROK(Republic of Korea) Seoul-Gwangjin-gu-602ho. 34-11. Ttukseom-ro 52ma-gil.
Tel: +82 10 9667 1175
Email: cyart77@msn.com
Web:

The World's Finest pearls. Introducing the best quality Australian south sea pearls and Tahitian black pearls. we distribute the best quality pearls to Australia and Korea and till the World hear our pearl story.

Unio jewelry

6.2C8-012

Address: 韩国 ROK(Republic of Korea) Seoul-Jung-gu-22, 21-4th Floor, SAMIK FASHION TOWN 7, Namdaemunsi jang 8-gil
Tel: 18867199797
Email: ljookm@naver.com
Web: www.uniojewelry.com

Founded in 1997, Unio Jewelry produces jewelry and sells it outside the country. Jinju products colored goods and ornamentsI think customer satisfaction is the best as I make it into a unique design such as silver and handmade products.

Sejingem

6.2C8-013

Address: 韩国 ROK(Republic of Korea) Seoul-jongro-gu-121-1, Bongik-dong
Tel: +82-2-763-3607
Email: sejingem61590@gmail.com
Web:

jewelry company

youngsuksa

6.2C8-014

Address: 韩国 ROK(Republic of Korea) seoul-jongro-gu-Seoul jewelry 149, Bongik-dong
Tel: +82-2-353-3953
Email: jupi700@naver.com
Web:

彩虹女神珠宝国际有限公司

6.2C8-015

Address: 香港地区 HongKong China 香港-香港-Room D, 10/F, Tower A, Billion Center, 1 Wang Kwong Road, Kowloon Bay, Kowloon, Hang Kang
Tel: 00852-25077219
Email: jewelryiris@jewelryiris.com
Web:

主要从事有色珠宝的采购与零售，批发。产品主要包括红宝石、蓝宝石、祖母绿的成品饰品

AGPG SP.z.o.o.SP.K

6.2C8-016

Address: 波兰 Poland Kujawsko-Pomorskie-85-052 Bydgoszcz-Augusta Cieszkowskiego 6
Tel: +48 523287826
Email: sklep@jubiler-glebocki.pl
Web: www.jubiler-glebocki.pl www.ag-pg.pl

We are Jewellery makers from Poland with top quality Amber jewellery unique designs & trendy fashionable to wear and have home collection. Boutique retail with all products handmade. We use also precious stones diamonds & sapphires. Amber Jewellery from Poland Baltic Sea region. Welcome to our Amber jewellery unique designs & collection.

HOP FU JEWELLERY MFY.LTD

6.2C8-017

Address: 香港地区 HongKong China Rm11, 3/F, Block A, Focal Ind. Ctr., 21 Man Lok St., Hunghom, Kowloon, Hong Kong
Tel: (852) 23308610
Email: maggiehopfu@gmail.com
Web: www.hopfu.com.hk

洪福珠宝国际集团(香港)有限公司

6.2C8-018

Address: 香港地区 HongKong China 香港湾仔骆克道89号湾仔中汇大厦4楼401室
Tel: 13681677811
Email: 1498794671@qq.com
Web:

洪福珠宝国际集团(香港)有限公司主营缅甸红宝石、尖晶石、蓝宝石、莫桑比克红宝石、哥伦比亚祖母绿、赞比亚祖母绿批发零售。

真悦珠宝有限公司 / ZY JEWELRY CO.,LIMITED

6.2C8-019

Address: 香港地区 湾仔 Hong Kong China Wanchai
Tel: 13509601985
Email: 13509601985@139.com
Web:

真悦珠宝是一个综合性的珍珠首饰品牌，涵盖多种珍珠产品。
Zhenyue jewelry is a comprehensive pearl jewelry brand, covering a variety of pearl products.

HENG YUET (H.K.) CO. LIMITED / 恒悦(香港)有限公司

6.2C8-020

Address: 香港地区 HongKong China NT-TAI PO-FLAT/RM D BLK 16 7/F
Tel: 13924669112
Email: evan_meiying@163.com
Web:

专营珍珠配件首饰批发及零售

珍珠皇后(香港)有限公司

6.2C8-021

Address: 香港地区 HongKong China 尖沙咀东科学馆道14号新文华中心B座918-920室
Tel: 852 23661886
Email: 55334225@QQ.com
Web:

Marshall & Ki Limited

6.2C8-022

Address: 韩国 ROK(Republic of Korea) Seoul 03698-Seoul-Seodaemun-Gu, Jeunggaro 2 Gil 56-56, Yonhui Heights Villa B-4
Tel: 82-70-7731-1530
Email: garettmarshall@yahoo.com
Web:

Marshall & Ki Limited offers unique pieces of fine jewelry handcrafted from 18K gold that highlight the natural beauty and luster of precious and semiprecious gemstones.

SULHWA CHILGI

6.2C8-023

Address: 韩国 ROK(Republic of Korea) Gyeonggi-do-Namyangju-si-2F, 2140, Gyeongchun-ro, Hwado-eup
Tel: 15158252311
Email: sulhwa5725@naver.com
Web: www.mother-of-pearl.co.kr

YOUJIN JEWELRY

6.2C8-024

Address: 韩国 ROK(Republic of Korea) Republic of Korea-Gangnam-gu, Seoul-1F 36, Dogok-ro 4-gil
Tel: 07082826000
Email: rara6000@hanmail.net
Web: rara6000.blog.me

SHINYANGSA

6.2C8-025

Address: 韩国 ROK(Republic of Korea) Seoul-Joong-gu-#302 Doggebi Market 49, Namchang-dong,
Tel: +82-2-753-9537
Email: sinsalla@hanmail.net
Web:

Shinyangsa is a jewelry company with a long tradition. It is famous for its decades-long experience in international exhibition and prize winning international visual contest. It is Jewelry Land company that has been making up many maniacs by introducing its own unique Jewelry that focuses on natural jewelry.

Jeaniepearl

6.2C8-028

Address: 韩国 Seoul-16, Donhwamun-ro 6ga-gil, Jonhno-gu ROK(Republic of Korea) Seoul-Jonhno-gu-16, Donhwamun-ro 6ga-gil, Jonhno-gu
Tel: +82 2 745 3272 / 8227453272
Email: ldspearl@gmail.com
Web:

pearl wholesale company

GRACEFUJIMI Co., Ltd.

6.2C8-031

Address: 日本 Japan OSAKA-hannan-1-167, SHIMOIDE
Tel: 0724720414
Email: fujiwara@garden-himeji.com
Web:

In Osaka, in the neighboring city for 20 years, 7 jewelry stores are opened.

HAMADA JEWELRY&WATCH Inc.

6.2C8-034

Address: 日本 Japan Hiroshimaken-Fukuyamashi-2-10-17Minamizaouchou
Tel: 81849833388 / +81849833388
Email: info@vanillashop.me
Web:

Myung Bo

6.2C8-026

Address: 韩国 ROK(Republic of Korea) Seoul-Jung-gu-#88ho, B1, Namdaemun Sijang 4Gil 3
Tel: +82-2-776-4044
Email: h22s5o@hanmail.net
Web:

Jewelgarden

6.2C8-027

Address: 韩国 ROK(Republic of Korea) Seoul-Jung-gu-49, Namchang-dong
Tel: +82-2-773-1461
Email: jupi700@naver.com
Web:

AENOC

6.2C8-029

Address: 韩国 ROK(Republic of Korea) Seoul-Kangnam-gu-302 Woojoo BLD, 18-5 Apgujing-ro
Tel: +82-2-547-3533
Email: enoc537@daum.net
Web:

Gemco Jewelry Co.,Ltd / 韩国珍可珠宝有限公司

6.2C8-030

Address: 韩国 ROK(Republic of Korea) Seoul-Gangbuk-gu-6F, Gangbuk Union Bd, Beon-dong 239
Tel: +82 2 981 7400
Email: gemcocn@sina.com
Web:

MIMURA Jewelry Co.,LTD

6.2C8-032

Address: 日本 Japan Hiroshima-Fukuyama-1-10 Kasaoka-machi
Tel: 084-923-0899
Email: hiroka1101@gmail.com
Web:

Jewelry and Watch retail service industry

Japan Jewelry Trade Association

6.2C8-033

Address: 日本 Japan Tokyo-Tokyou-Aurum Bld105, 1-26-2, Higashi-ueno, Taito-ku
Tel: +8180-3355-2221
Email: info@jjta.or.jp
Web: jjta.or.jp

Jewelry Industorial member's association for trade and expanding jewelry bussiness between Japan and China and overseas.

TOKYO PEARL CO., LTD / 東京真珠株式会社

6.2C8-035

Address: 日本 Japan TOKYO-TOKYO- 6-16-3 GINZA CHOU-KU
Tel: +81335431161
Email: jerry@tokyopearl.co.jp
Web: www.tokyopearl.com

於日本真珠業界迄立超過半世紀，東京真珠一直都是担當着業界眾先鋒之其中一員的角色。一切沿於1959年，本社的創立人 —— 小山竹三先生成立了東京真珠，目的是要把夙負盛名的日本阿貝屋(AKOYA)珍珠帶到世界每一個角落。
而於80年代，東京真珠更把當時尚未為市場所熟悉的大溪地黑珍珠推往一個新的層面，而大溪地政府亦於1997年授予勳章予東京真珠以作表揚。
我們亦於日本伊勢設有工場以確保珍珠的質素，亦會搜羅世界各地的高品質珍珠以配合客戶的要求。而敝司亦會參與一年四次的香港珠寶展,務求能跟世界各地的貴賓保持聯繫。

FURUYA & CO.,LTD

6.2C8-036

Address: 日本 Japan Yamanashi-Kofu-2-7-5
Tel: +81-55-235-1203
Email: info@furuya-c.com
Web: stonecameo.jp

Goko Shokai Co., Ltd

6.2C8-037

Address: 日本 Japan Yamanashi-Koufu-2-10-7 Yuda
Tel: +81-55-232-3321
Email: info@goko-sk.jp
Web: www.goko-sk.jp

THA ZIN NI GEMS & JEWELLERY

6.2C9-001

Address: 缅甸 1792 , upper pansodan road, 仰光, 11211, 缅甸 Myanmar 1792, upper pansodan road,Rangoon, 11211, Myanmar
Tel: 0095-1-2896589
Email: 3326274951@qq.com
Web:

我公司位于缅甸仰光市，是一家专门从事翡翠原石销售以及雕刻、加工、批发、渠道加盟和市场的公司。以“”传播翡翠文化，树立行业典范”为宗旨，用更好的翡翠、工艺及服务打动更多消费者和团体。
Our company is located in Yangon City, Myanmar. It is a company specializing in the sale of jadeite and carving, processing, wholesale, channel franchise and the market. With the aim of "disseminating jadeite culture and setting up industry model", more consumers and groups will be moved by better jadeite, craft and service.

METAL JEWELRY DESISN CO.,LTD

6.2C9-002

Address: 泰国 Thailand 352/21-23 SOI-KRUNGTHONBURI4., KRUNGTHONBURI RD., BANGLAMPHULANG BANGKOK10600 THAILAND
Tel: 662-4387981-2
Email: yongjin1618@163.com
Web:

Emil Weis Opals KG

6.2C9-003

Address: 德国 Germany kirschweisler-kirschweisler-Auf dem huttenflur 8 D-55743 kirschweisler
Tel: 18601343868
Email: gaifuyan@sina.com
Web: www.emilweisopals.com

Emil Weis Opals KG是一家专业化加工璀璨宝石--欧泊的公司，至今已有115年的历史，凭借其专业化的业务技能和丰富的市场经验，为客户提供详尽严谨的服务，将欧泊的光彩与时代潮流的紧密结合，化身为美丽欧泊的守护者。

Apex Gems & Jewellery

6.2C9-005

Address: 缅甸 Myanmar Yangon-No.113, Nawarat Shed, Ground Floor, Bogyoke Market
Tel: +9595186327
Email: apexgems3@gmail.com
Web:

Apex Gems & Jewellery is wholesale & retail jade business type and objective is to get customer satisfaction with price & product.

Shwe Nadi Gems & Jewellery

6.2C9-006

Address: 缅甸 Myanmar Yangon-No.6, Nawarat Shed, Bogyoke Market
Tel: +95943031201
Email: sawhlanwe36@gmail.com
Web:

Shwe Nadi objective is to fulfill the international & Myanmar customers needs and wants for long term relationship. Jade is mainly product for retail customers & usually going china trade fair.

黛米(香港)珠宝集团有限公司 / Demi (HK) Jewellery Group Limited

6.2C9-004

Address: 香港地区 香港-湾仔区-骆克道300号 侨阜商业大厦20楼A室 Hong Kong China HK-WAN CHAI-FLAT/RM A 20/F KIU FU COMMERCIAL BLDG 300 LOCKHART ROAD
Tel: 13601818058
Email: 1666075876@qq.com
Web:

公司成立于2013年，是一家专注于珍珠饰品并拥有独特风格，集制作、设计和销售为一体的公司。公司的产品品类包括：淡水珠、日本海水珍珠、南洋金珠、南洋白珠、大溪地黑珠等，珍珠成品包括项链、手链、吊坠、戒指以及耳环等。珍珠饰品设计样式灵动多变，释放珍珠的美与内涵。

Green Heaven Jade & Jewellery

6.2C9-007

Address: 缅甸 Myanmar Myanmar-Yangon-No.6/GS, North Wing, Boyoke Market
Tel: +9595136889
Email: htarhtaryee02@gmail.com
Web:

Green Heaven is mainly offered jade products from Myanmar with a reasonable prices . Purpose is to penetrate the jewellery market and to get the customers wholesale and retail.

Jade Mount Gems & Jewellery

6.2C9-008

Address: 缅甸 Myanmar Yangon-N0.2, Nawarat Hall, Bogyoke Aung San market
Tel: +9595003516
Email: jademountjade@gmail.com
Web:

Jade Mount Gems & Jewellery is mainly distributed natural jade products from Myanmar. Our purpose is to get long term customer relationship and to fulfill customer needs & wants.

Shwe Yate Diamond & Jewellery

6.2C9-009

Address: 缅甸 Myanmar Yangon-No. 93, West D Yone, Bogyoke Market
Tel: +9595145402
Email: shweyategems@gmail.com
Web:

Shwe Yate Diamond & Jewellery is mainly distributed diamond & jewellery products in Myanmar.The main purpose is to get the loyal customers & give best prices to meet customers needs & wants for long term relationship.

Ayeyarnaddy Myanmar Gems & Jewellery

6.2C9-010

Address: 缅甸 Myanmar Yangon-No.13, 1st Floor, Sayarsan Plaza, Corner of Sayarsan Road and New University Avenue Road, Bahan Township
Tel: +959896538458
Email: thitaroomgk@gmail.com
Web:

Ayeyarnaddy Myanmar Gems & Jewellery is mainly offered natural jewellery products from Myanmar with a reasonable prices . Purpose is to penetrate the jewellery market and to get the customers wholesale and retail.

Lin Yaung Ci Gems Co.,Ltd

6.2C9-011

Address: 缅甸 Myanmar Yangon-No.6,The Front Roll of Bogoke Market
Tel: +9595320701
Email: chochowin@lyc.gems.com
Web: www.lycgems.com

LYC has been established jade, gems production company since 2010. Our business model is based on meeting the needs of the Myanmar & international people, & providing the best quality gems products at the most affordable prices. To do this we offer jade products, gems loose stones especially jade, ruby, sapphire, pearl & amber, customized jewelry set, gold wears, silver wears & gems art pictures.

DRAGON'S PEARL (HONG KONG) LIMITED

6.2C9-012

Address: 香港地区 HongKong China FLAT/RM 301 3/F ORIENT CENTRE 67-71 CHATHAM ROAD SOUTH KL
Tel: +86 0755-25471800
Email: 1047460098@qq.com
Web:

专业、专注、专营海水珍珠

创邦(香港)有限公司 / TOP PACIFIC (H.K.) LTD.

6.2C9-013

Address: 香港地区 红磡民裕街30号兴业大厦9楼J室 Hong Kong China Unit J, 9/F., Summit Building, No.30 Man Yue Street, Hung Hom, Hln
Tel: 68888307
Email: michelleyu@top-pacific.com
Web:

创邦(香港)于2013年转型专注于从事彩宝、彩钻设计、加工、批发及零售业务。

美国珠宝评估公司 / American Jewelry Appraisals Inc.

6.2C9-014

Address: 美国 纽约-8825 53 AVE Elmhurst NY 11373 United States of America New York-8825 53 AVE Elmhurst NY 11373
Tel: 021-60518948
Email: better-gems@foxmail.com
Web:

九龙国际饰品集团有限公司 / KOWLOON INTEL ACCESSORIES GROUP CO., LTD.

6.2C9-015

Address: 香港地区 香港湾仔区洛克大道315号 Hong Kong China 315 Lockhart Ave. Wan Chai
Tel: +66 27443101
Email: 1464966263@qq.com
Web:

KOWLOON INTEL ACCESSORIES GROUP CO., LTD. is a sale and design of marcasite and silver jewelry, fine gold jewelry, platinum and silver jewelry.

IHAI BENJAHONG GROUP CO,. LTD / IHAI BENJAHONG GROUP CO., LTD

6.2C9-016

Address: 泰国 Thailand Bangkok-Bangna-33 Soi 25 BangNa-Trad Rd,Bangna
Tel: +66 27443101 / +66 27443108
Email: info@asean-china.org
Web:

Our company is a sale and design of synthetic gemstones and supplier for the whole jewelry industry service. We provide high-quality synthetic gemstones, gold and silver jewelry accessories for our customers.

香港金生生国际集团有限公司 / HONG KONG KINGSANGSANG INTERNATIONAL GROUP LIMITED

6.2C9-017

Address: 香港地区 HongKong China FLAT/RM 1907 19/F LEE GRADEN ONE 33 HYSAN AVENUE CAUSEWAY BAY
Tel: 3115-8812
Email: felix_fds@vip.163.com
Web:

MAJESTY

6.2C9-018

Address: 缅甸 Myanmar Yangon-14, Lakekan Street, Yeegyaw
Tel: 951397686 / 9595178189
Email: kanhtoomg@gmail.com kyikyithin19@gmail.com
Web:

Jewelry Majesty Gems Shop is Myanmar based gemstones company which deals in, Precious and Semi-Precious Stones, which includes calibrated as well as Rough Stones. It controls all the aspects of business process i.e., sourcing, producing, and marketing to provide goods with excellent quality as per the customer's specification.

Aye Wa May Wa Gems & Jewellery

6.2C9-019

Address: 缅甸 Myanmar Naypyidaw-Gems Museum & Mart
Tel: +959787719505
Email: awamaywa@gmail.com
Web:

Aye Wa May Wa Gems & Jewellery is mainly offered jade products, customized jewellery set, gold wears, silver wears & gems art pictures, and use a combination of wholesale & retail marketing strategies to get products to the people around the world, and also mainly exports to Thailand, Singapore and China.

Super Gems & Jewellery

6.2C9-020

Address: 缅甸 Myanmar Yangon-No.43, Nawarat Hall, Bogyoke Market
Tel: +95774685028
Email: supergems29@gmail.com
Web:

Super Gems & Jewellery is mainly distributed natural jade products from Myanmar. Our purpose is to get long term customer relationship and to fulfill customer needs & wants. The main target to penetrate in Asia to get customers is by participating trade fairs in China.

Aung Zabu Pearl & Jewellery / Aung Zabu Jewellery

6.2C9-021

Address: 缅甸 Myanmar Yangon-BLDG 362, Wirelet 1Street, Gabaraye

Tel: +9595159406

Email: hanthitun2014@gmail.com

Web:

Aung Zabu Jewellery objective is to fulfill the international & Myanmar customers needs and wants for long term relationship. Pearl is mainly product for retail customers & usually going Asian trade fair.

Hein Nadi Pearl & Jewellery

6.2C9-022

Address: 缅甸 Myanmar Yangon-No.77, Nawart Yone, Bogyoke Market

Tel: +9595052631

Email: heinnadigems@gmail.com

Web: www.heinnadi.com

Hein Nadi Pearl & Jewellery is mainly produced natural pearl products from Myanmar and now pearl is distributed in retail & wholesale market for improving business.

Princess Myanmar Gems & Jewellery

6.2C9-023

Address: 缅甸 Myanmar Yangon-No.43, Ground Floor, Nawarat Block, Bogyoke Market

Tel: +95770073943

Email: princessmyanmar6@gmail.com

Web:

Princess Myanmar is mainly offered jade products from Myanmar with a reasonable prices. Purpose is to penetrate the jewellery market and to get the customers in retail.

* The deadline for information submission is 24:00, September 20. All information shall be provided and filled in by the exhibitors and the operating agencies. The Organizers bear no liability for any errors or mistakes in the information.

* 信息截止到北京时间9月20日24:00，所有信息均为参展商及组展机构自行提供及填报。若有错误，承办单位概不负责。

品质生活展区
LIFESTYLES
5.1/6.1/6.2馆 Hall

医疗器械及医药保健展区
MEDICAL EQUIPMENT & HEALTHCARE PRODUCTS

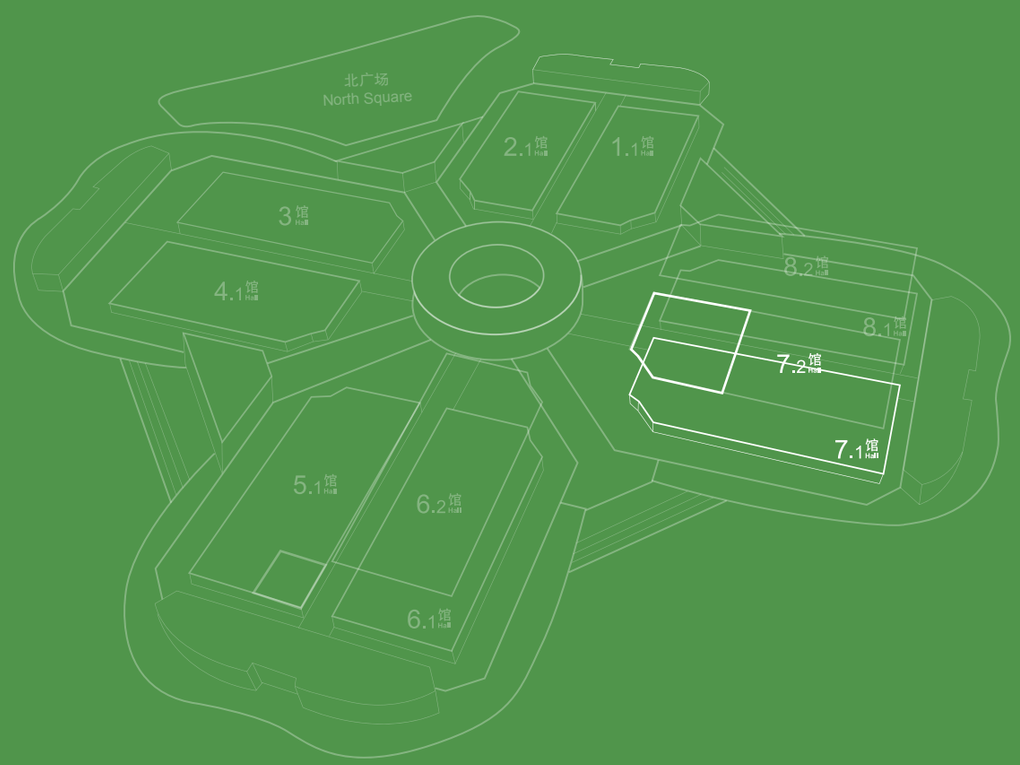

7.1/7.2馆 Hall ▶▶

奥林巴斯 / Olympus Corporation

7.1A01-002

Address: 日本 Japan Tokyo-Tokyo-Shinjuku Monolith, 3-1 Nishi-Shinjuku2-chome, Shinjuku
Tel: +86-010-58199026
Email: lin_zhu@olympus.com.cn
Web: http://www.olympus.com.cn

奥林巴斯诞生于1919年，以医疗、映像、科学三大产业为支柱，经历了百年的沉淀与历练，已经发展为一家卓越的光学科技企业。
秉承“守信重责、同理共融、高瞻远瞩、锐意进取、多样合作 ”的企业核心价值观，奥林巴斯用领先领航的技术，钻研进取的创新，超越期待的服务，为专业客户提供解决方案，致力于实现世界人民的健康、安心和幸福生活，不断为社会做出贡献。
Founded in 1919, Olympus has become a leading optical science and technology enterprise, covering medical, imaging and scientific solutions business fields with almost 100 years' history.
Olympus aims at making people's lives healthier, safer and more fulfilling.

多特瑞 / dōTERRA Manufacturing, LLC

7.1A02-002

Address: 美国 犹他州-普莱森特格罗夫-南389号西1300号 United States of America Utah-Pleasant Grove-389 South 1300 West
Tel: 021-22271778
Email: cfiona@doterra.com
Web: https://china.doterra.cn/CN/zh_CN

美国多特瑞公司成立于2008年，总部位于美国犹他州，是全球领先的芳香护理和精油公司。目前多特瑞的业务已遍布全球140多个国家和地区，年营业额逾20亿美金。产品包括精油、个人保养和水疗产品、营养保健品和健康居家生活产品。过去3年，多特瑞被福布斯杂志连续评为全美最佳中型企业。
Founded in 2008 and headquartered in UT State, USA, dōTERRA is the world's leading company in the global aromatic care and essential oils market. Its business has now spread over 140 countries and regions globally with an annual profit of more than 2 billion dollars. Its products including essential oils, personal care and spa products, nutritional health products and healthy home life products.

阿斯利康 / AstraZeneca

7.1A03-002

Address: 英国 United Kingdom Granta Park, Cambridge CB21 6GH
Tel: 021-60302288
Email: Ruby.Zhang@astrazeneca.com
Web: www.astrazeneca.com.cn

阿斯利康是一家科学至上的全球性生物制药企业，专注于研发、生产及营销处方类药品，重点关注肿瘤、心血管及代谢疾病、呼吸三大核心疾病领域。同时，阿斯利康也有选择性地积极投入自体免疫、神经科学及感染领域。阿斯利康的业务遍布100多个国家，创新药物惠及全球数百万患者。
AstraZeneca is a global, science-led biopharmaceutical company that focuses on the discovery, development and commercialisation of prescription medicines, primarily for the treatment of diseases in three therapy areas - Oncology, Cardiovascular, Renal & Metabolism and Respiratory. AstraZeneca operates in over 100 countries and its innovative medicines are used by millions of patients worldwide.

阿特蒙医院 / Artemed Hospital

7.1A01-003

Address: 德国 Germany Bayern- Starnberger, Munich-Bahnhofstraße 7, 82327 Tutzing
Tel: (86-021) 63350128
Email: Angela.Wang@artemed.cn
Web: http://www.artemed.cn

Aetemed is one of the fastest growing hospital groups in German specializes in orthopedics which deals with all diseases of bones, joints and muscles. Today, Artemed operates under its subsidiaries ten acute hospital, five senior centers as well as the Artemed foundation.

日本永远幸医疗集团 / TOWAKO Medical Group

7.1A02-003

Address: 4-33-2 Tachikawa TOKYO 日本
Tel: 021-50187777
Email: daixy@towako.c
Web: www.towako.cn

公司主要业务：医疗机构投资、经营管理、食品开发、销售和进出口业务。医疗、健康仪器的销售及进出口。健康医疗相关的方法、专业知识等信息的咨询服务及相关著作的出版业务。医药品、药剂的进出口代理等。
Sales and import and export of medical and health instruments. Investment, operation and management of medical institutions, food development, sales and import and export business.

礼来 / Eli Lilly and Company

7.1A02-004

Address: 美国 United States of America Indiana-Indianapolis-Eli Lilly and Company Global Headquarters Lilly Corporate Center
Tel: 021-23020882 / 8621 23020882
Email: xu_yin_wen@lilly.com
Web: www.lilly.com
https://www.lilly.com

礼来制药是一家全球领先的医药公司，致力于通过创新改善人类健康水平。礼来制药诞生于一个多世纪之前，公司创始人致力于生产高质量的药品以满足切实的医疗需求。今天，我们仍然执着于这一使命，并基于此开展工作。在全球范围内，我们的员工始终努力研发能为人类生活带来改变的药物，并将其提供给那些切实所需的患者。不仅如此，我们还致力于改善公众对于疾病的理解、并更好地开展疾病管理，通过投身慈善事业和志愿活动回馈社会。
Lilly is a global healthcare leader that unites caring with discovery to make life better for people around the world. We were founded more than a century ago by a man committed to creating high-quality medicines that meet real needs. Across the globe, Lilly employees work to discover and bring life-changing medicines to those who need them, improve the understanding and management of disease.

株式会社津村 / TSUMURA&CO.

7.1A02-001

Address: 日本 Tokyo-Tokyo-日本东京都港区赤坂2-17-11 Japan Tokyo-Tokyo-2-17-11, Akasaka, Minato-ku
Tel: 81-3-6361-7169
Email: bi_jian@pingan-tsumuramail.com
Web: www.tsumura.co.jp

1983年，日本国株式会社津村在创始人“良药必定畅销”的信念下诞生，历经一百多年的岁月磨砺，已成为日本汉方药龙头企业，其医疗用汉方制剂份额占到日本市场约84%。
2017年，日本津村和中国平安相遇携手，为共同推进中国中医药事业发展，合资成立平安津村有限公司，致力于将安全、高品质中药及健康产品提供给中国消费者。
In 1983, the company was born under the belief that "good medicine will surely sell well". After more than 100 years of experience, it has become the leading chinese medicine enterprise in Japan. Its shares is about 84% of the Japanese market. In 2017, Tsumura and China Pingan jointly established Ping An Jincun Company, in order to provide safe, high quality Chinese medicine to Chinese customers.

赛诺菲集团 / Sanofi Group

7.1A03-001

Address: 法国 巴黎-巴黎-博蒂街54号 France Paris-Paris-54, rue la Boétie, 75008
Tel: +86 021-22266666
Email: Communication.China2@sanofi.com
Web: www.sanofi.com

赛诺菲致力于帮助人们应对健康挑战。我们是一家全球生物制药公司，专注人类健康。我们用疫苗预防疾病，并提供创新的治疗方案减轻病痛和困扰。我们助力罹患罕见病的极少数人，也支持长期受慢性病困扰的千万患者。
Sanofi is dedicated to supporting people through their health challenges. We are a global biopharmaceutical company focused on human health. We prevent illness with vaccines, provide innovative treatments to fight pain and ease suffering. We stand by the few who suffer from rare diseases and the millions with long-term chronic conditions.

诺和诺德 / Novo Nordisk

7.1A04-001

Address: 丹麦 Denmark Denmark-DK-2880 Bagswaerd-Novo Alle
Tel: 010-59615845
Email: nzag@novonordisk.com
Web: www.novonordisk.com

诺和诺德拥有96年历史，是一家始终致力于创新的公司，是糖尿病领域的领先者。这一传统也使我们拥有经验和能力，可以帮助人们战胜其他严重疾病，比如血友病、生长激素紊乱和肥胖症。诺和诺德总部位于丹麦首都哥本哈根，在全球80个国家和地区拥有约4.32万名员工，向全球超过170个国家和地区提供产品和服务。诺和诺德(中国)制药有限公司于1994 年成立。截至2018年底，诺和诺德在华员工总数4,636人。
Novo Nordisk is a global healthcare company with 96 years of innovation and leadership in diabetes care. This heritage has given us experience and capabilities that also enable us to help people defeat other serious chronic conditions: haemophilia, growth disorders and obesity. Headquartered in Denmark, Novo Nordisk employs approximately 43,200 employees in 80 countries and markets its products in more than 170 countries. As the leader in Chinese diabetes market, Novo Nordisk has always been committed to Changing Diabetes. Founded in 1994, Novo Nordisk's presence in China has been growing for 25 years. We provide products and services to people with diabetes across mainland China as well as Hong Kong, Macau and Taiwan. At the end of 2018, Novo Nordisk employed 4,636 employees in China.

荷兰皇家飞利浦公司 / Koninklijke Philips N.V. Royal Philips.

7.1A04-002

Address: 荷兰 Amsterdam-阿姆斯特丹-荷兰 Netherlands Amsterdam-Amsterdam-High Tech Campus 5, 5656AE Eindhoven
Tel: 18600090648 / 02124223042
Email: angela.y.zhou@philips.com
Web: https://www.philips.com.cn

荷兰皇家飞利浦公司是一家领先的健康科技公司，致力于在从健康的生活方式及疾病的预防,到诊断、治疗和家庭护理的整个健康关护全程，提高人们的健康水平，并改善医疗效果。飞利浦将凭借先进技术、丰富的临床经验和深刻的消费者洞察，不断推出整合的创新解决方案。公司目前在诊断影像、图像引导治疗、病人监护、健康信息化以及消费者健康和家庭护理领域处于领导地位。
Royal Philips (NYSE: PHG, AEX: PHIA) is a leading health technology company focused on improving people's health and enabling better outcomes across the health continuum from healthy living and prevention, to diagnosis, treatment and home care.

依视路集团 / Essilor Group

7.1A05-003

Address: 法国 France CEDEX-Charenton-Le-Pont-147Rue De Paris 94220
Tel: 021-52038150
Email: louise.chen@essilorchina.com
Web: https://www.essilor.com/en

作为全球领先的视光企业，依视路于170年前成立于法国，专注于设计、制造并销售品类丰富的镜片产品，帮助人们矫正和保护视力。依视路秉承“改善视力，改善生活”的企业使命，每年投入2亿欧元用于研发，不断推出提升消费者戴镜体验的新产品。依视路还开发并销售设备、仪器，并提供相应服务。依视路集团专注于镜片技术的发展，产品与服务已遍布全球100多个国家和地区，在全球70个国家和地区拥有69,000多名员工，为约35万个客户提供镜片和镜片制造机器等。依视路在全球范围内设有三大创新科技中心、超过450名科研人员，迄今为止已拥有超过9500多项专利。2011年至2018年，依视路连续被福布斯评为“全球最具创新力的100家公司"之一。
Essilor International is the world's leading ophthalmic optics company. Founded in France 170 years ago, Essilor designs, manufactures and markets a wide range of lenses to correct and protect eyesight. With the corporate mission of “improving lives by improving sight”, Essilor allocates more than €200 million to research and innovation every year as part of its commitment to continuously bring new, more effective products to market. Essilor also develops and markets equipment, instruments and services for eyecare professionals.
Essilor Group focuses on the development of lens technology, with its products and services distributed in over 100 countries and regions around the world. Essilor employs more than 69,000 individuals in 70 countries and regions, and provides lenses and lens manufacturing machines for approximately 350,000 clients. Essilor operates three innovation and technology centers, has more than 450 researchers, and has filed more than 9,500 patents worldwide. Every year from 2011 to 2018 Essilor was named one of the “100 World's Most Innovative Companies” by Forbes magazine.

波士顿科学 / Boston Scientific

7.1A05-001

Address: 美国 United States of America Marlborough-300 Boston Scientific Way
Tel: +86 21 8031 7333
Email: Michelle.Peng@bsci.com
Web: http://www.bostonscientific.cn

波士顿科学（交易代码：BSX）承诺为生命创新，致力于创新医疗解决方案，改善全球患者生活。四十年来，波士顿科学始终引领全球医疗技术行业的发展，通过提供覆盖广泛疾病治疗领域的高性能医疗解决方案，满足广大患者亟待解决的医疗需求，提升医疗保健效率。
Boston Scientific Corporation (NYSE: BSX) transforms lives through innovative medical solutions that improve the health of patients around the world. As a global medical technology leader for more than 30 years, the company advances science for life by providing a broad range of high performance solutions that address unmet patient needs and improve the efficiency of healthcare.

伯乐生命医学 / Bio-Rad Laboratories, Inc.

7.1A05-004

Address: 美国 United States of America California-Hercules-1000 Alfred Nobel Drive
Tel: 13816027205
Email: yiqing_sheng@bio-rad.com
Web: www.bio-rad.com.

六十多年来，Bio-Rad 一直为医疗行业提供帮助生命科学研究人员加速开发过程以及帮助医学诊断实验室获得更快、更好结果的创新并且实用的产品。公司成立至今，我们建立了长期的客户关系，有助于推进我们新产品和解决方案推出方面的研发工作。凭借全球运营网络和8000多名员工，我们正在帮助人们过上更健康长寿的生活。
Bio-Rad is a global leader in developing, manufacturing, and marketing a broad range of innovative products for the life science research and clinical diagnostic markets. With a focus on quality and customer service for over 65 years, our products advance the discovery process and improve healthcare. Our customers include university and research institutions, hospitals, public health and commercial laboratories, biotechnology, pharmaceutical, as well as applied laboratories that include food safety and environmental quality.

费森尤斯集团 / Fresenius Medical Care

7.1A06-001

Address: 德国 巴登洪堡 Germany Bad Homburg
Tel: +86 21 6115 2803
Email: Sophie.shen@fmc-asia.com
Web: www.freseniusmedicalcare.asia

费森尤斯集团(Fresenius AG)是一家大型跨国世界500强企业。其中作为驰名世界的透析产品和服务的全球领导品牌，费森尤斯医疗于1966年涉足透析领域,不但研究开发,生产及销售血透,腹透和重症产品，同时还提供透析治疗服务。费森尤斯医疗在全球拥有约112,000名员工，为超过329,000名患者提供综合服务每年在全球超过3,971家透析机构中完成5000万次透析治疗。大约每0.6秒就有一个患者接受费森尤斯医疗提供的医疗服务。
Fresenius Group is a global Fortune 500 company. With more than five decades of experience in dialysis and innovative research, Fresenius Medical Care is the world's leading provider of products and services for people undergoing dialysis.
As a vertically integrated company we are involved in all aspects of finding solutions for chronic kidney disease, from research and development of new therapies, to manufacturing our dialysis products, right through to offering comprehensive therapy options within our clinics.
With around 112,000 employees globally, Fresenius Medical Care delivers integrated services to more than 329,000 patients, conducting 50 million treatments every year across more than 3,971 dialysis facilities worldwide. Every 0.6 seconds we provide a dialysis treatment somewhere on the globe.

豪洛捷医疗 / HOLOGIC,INC.

7.1A05-002

Address: 美国 Marlborough -Boston-马萨诸塞州波士顿市 United States of America Marlborough -Boston-250 Campus Drive Marlborough Massachusetts
Tel: 010-57759071
Email: zhang.li@hologic.com.cn
Web: www.hologic.com

豪洛捷是一家专注妇女健康,创新型医疗技术公司，业务涵盖医疗诊断、乳腺健康、微创手术、骨骼健康、医疗美容等领域，致力于通过早期检测和治疗为全球女性带来更多健康和福祉，“The Science of Sure”是豪洛捷矢志不渝的企业宗旨。
As a global leader in women's health, Hologic offers a broad range of solutions for diagnostic, breast and skeletal health, GYN surgical, and medical aesthetics.

美时医疗（美国）有限公司 / Time Medical Systems

7.1A05-005

Address: 美国 United States of America 3560 Dunhill Street, Suite#130, San Diego, CA92121
Tel: +86 021-5080-4982
Email: helen.shen@time-medical.com
Web: www.time-medical.com

美时医疗是全球尖端医疗影像技术的创新公司。公司致力于向客户提供完善的医学成像解决方案，包括磁共振成像系统（MRI）、计算机断层扫描成像系统（CT）、数字X光机系统（DR）的开发、设计、制造、销售和维护。美时医疗拥有原创技术及一百多项专利。创业团队，来自美国哥伦比亚大学、哈佛医学院香港大学等国际名校。
Time Medical (TM) is an innovative and disruptive tech leader in medical service industry. TM develops advanced medical imaging systems including MRI, DR, CT, as well as the cost-effective solutions for global healthcare needs. The founding team members are from top universities such as Columbia University and Harvard Medical School.

株式会社アスクレピオス医学 / Asclepius Meditec (Japan) Co.,Ltd.

7.1A06-002

Address: 日本 Japan Katsush1ka-ku-Takasago-1 F Takahashi Bldg 7-22-1
Tel: 021-5990-1777
Email: honey.wang@ascleway.com
Web: www.ascleway.org

2016年12月开始，日本厚生省公布氢分子医学列为B类先进疗法，带动了行业的快速发展。Asclepius Meditec(Japan)Co., Ltd致力于水素发生器研发与制造，是世界此领域行业代表。公司高浓度高流量的技术特点领先全球，此次引进国内的医疗器械也参加了各大医院的临床研究工作，期待为中国健康事业作出贡献。
Since December 2016, the health ministry of Japan has listed hydrogen as a class B advanced therapy, which has driven the rapid development of the industry. Asclepius Meditec (Japan) Co., Ltd is committed to the research, development and manufacturing of hydrogen generator, and is the pioneer in this field. The company's technology of outputting large volumes of highly concentrated hydrogen is in.

安捷伦科技 / Agilent Technologies Singapore (International) PTE.LTD.

7.1A06-003

Address: 新加坡 新加坡-1 Yishun Avenue 7 Singapore. Singapore Singapore-1 Yishun Avenue 7 Singapore.
Tel: +86 10 64397652
Email: huihui.wang@agilent.com
Web: www.agilent.com

安捷伦科技公司（纽约证交所：A）是生命科学、诊断学和应用化学市场的全球领导者，拥有50多年的敏锐洞察和创新经验，安捷伦的仪器、软件、服务、解决方案和专家能够为客户最具挑战性的难题提供更可靠的答案。2018财年，安捷伦营业收入为49.1亿美元。全球员工数约为15,550人。
Agilent Technologies Inc. (NYSE: A) is a global leader in life sciences, diagnostics and applied chemical markets. Agilent delivers complete scientific solutions, helping customers achieve superior outcomes in their labs, clinics, business and the world they seek to improve.

默沙东 / MSD

7.1B01-001

Address: 美国 新泽西州-肯尼沃尔斯市-2000 Galloping Hill Road United States of America NJ 07033-Kenilworth-2000 Galloping Hill Road
Tel: +86 021-2211-8888
Email: msdmediacenter@merck.com
Web: www.msd.com

一个多世纪以来，默沙东已成为全球医疗行业的领先者。凭借处方药、疫苗与生物制品和动物保健产品，我们为全球140多个市场提供创新的医疗解决方案，增辉生命。中国是默沙东全球增长战略中至关重要的一部分。默沙东中国总部设在上海，同时在北京设有研发中心、在杭州和宁波设有工厂，实现了研发、制造和商业运营的三擎合一。
MSD, a leading global biopharmaceutical company, has been inventing for life. Through our prescription medicines, vaccines, biologic therapies and animal health products, we operate in more than 140 markets worldwide to deliver innovative health solutions.

百时美施贵宝 / Bristol-Myers Squibb

7.1B01-003

Address: 美国 United States of America NY 10016-New York, -Princeton Pike
Tel: 13817722463
Email: hui.wang3@bms.com
Web: https://www.bms.com/cn

百时美施贵宝公司是一家以研发并提供创新和高质量的药物、帮助患者战胜严重疾病为使命的生物医药企业，在美国已有100多年历史，今天已发展成为一家年销售额为200多亿美元，遍及世界120多个国家和地区，拥有54000多名员工的全球性多元化企业，公司总部设在美国纽约。2018年12月，世界品牌实验室发布《2018世界品牌500强》榜单，百时美施贵宝排名第408。
Bristol-Myers Squibb is a global biopharmaceutical company whose mission is to discover, develop and deliver innovative medicines that help patients prevail over serious diseases.
Bristol-Myers Squibb made its debut in China in 1982 with the establishment of Sino-American Shanghai Squibb, the first Sino-American pharmaceutical joint venture in China.

Slimbios Kft

7.1B01-006

Address: 匈牙利 Hungary
Tel:
Email:
Web:

泰尔茂株式会社 / Terumo Corporation

7.1A06-004

Address: 日本 东京-日本 Japan TOKYO-JAPAN
Tel: 010-64096685
Email: nan_chen@terumo.co.jp
Web: www.terumo.co.jp

泰尔茂株式会社由著名医学家北里柴三郎博士于1921年创立。泰尔茂起初以生产体温计为主，经过近一个世纪的发展，生产和销售的产品已涵盖血管造影与治疗用导管类、医用耗材类、输血相关类、人工心肺产品类、医用电子类等系列产品。
泰尔茂的医疗产品远销全球170 多个国家和地区。今后，我们将凭借泰尔茂的优势 —— 先进的医疗技术及经验，与广大中国优秀企业携手，共同开发新产品及新技术.这些产品及技术将不仅仅投放于中国市场,还将通过公司的国际化运作推向海外市场。“通过医疗贡献社会” —— 泰尔茂创立近百年来，始终如一地秉承这一最重要的公司理念，为人类健康事业不断努力。
Terumo Corporation was founded by the famous physician KITASATO SHIBASABURO in 1921. At the beginning, Terumo was dedicated to produce thermometer. After nearly a century of development, our products have already covered by medical consumables, blood management system, angiography and treatment of catheter, cardiovascular systems, medical electronics, etc. The medical products of Terumo are exported to more than 170 countries and regions around the world. In the future, we will join hands with the excellent enterprises of China to exploit our advantages of advanced medical technology and experience, and develop new products and technologies. These products and technologies will not only be put into China market but also overseas market through the international operation system of our company.
Contributing to society through healthcare. This is the most important mission and principle of Terumo. Terumo had been sticking to this principle ever since its foundation near 100 years ago, and will insist on making more and more efforts to contribute for human health.

强生 / Johnson & Johnson

7.1B02-001

Address: 美国 新泽西州-新布仑兹维克-强生广场 United States of America New Jersey-New Brunswick-One Johnson & Johnson Plaza
Tel: +862133376403
Email: wsun31@its.jnj.com
Web: https://www.jnj.com https://www.jnj.com.cn

强生是全球具综合性、业务分布范围广的医疗保健企业，业务涉及消费品、制药、医疗器材三大领域。在全球60个国家建立了250多家分公司，拥有125,000余名员工。2018年，全球销售额达816亿美元。强生在中国拥有近10,000名员工，在全国90多个城市设有办公室，8个生产基地。
Johnson & Johnson is the world's largest and most broadly based healthcare company，with three major business areas: consumer products, pharmaceutical products and medical devices. We set up more than 265 companies in 60 countries with approximately 125,000 employees worldwide and sales in 2018 reached 81.6 billion dollars. Johnson &Johnson has approximately 10,000 employees in China, and 8 manufacturing sites with offices in over 90 cities.

奥森多医疗 / Ortho Clinical Diagnostics

7.1A06-005

Address: 美国 United States of America New Jersey - New Jersey -1001 U.S. 202 Raritan, NJ 08869
Tel: 021-20507858
Email: sharon.yao@orthoclinicaldiagnostics.com
Web: www.orthoclinicaldiagnostics.com

作为全球体外诊断领导者，奥森多医疗（Ortho）始终服务于全球的临床检验和安全输血事业，为世界各地的医院、医疗网络、血站和商业性临床实验室提供高品质的自动化产品、信息管理系统以及整体解决方案。
Ortho, a global leader in in vitro diagnostics, serves the global clinical testing and safe blood transfusion industry and provides high-quality automation products, information management systems and overall solutions to hospitals, medical networks, blood banks and commercial clinical laboratories around the world.

勃林格殷格翰 / Boehringer Ingelheim

7.1B01-002

Address: 德国 莱茵兰-普法尔茨州-莱茵河畔殷格翰-Binger Strasse 173 Germany Rhineland-Palatinate State-55216 Ingelheim am Rhein-Binger Strasse 173
Tel: +86 21 5288 3894
Email: zinna.chen@boehringer-ingelheim.com
Web: www.boehringer-ingelheim.cn

德国家族制药企业勃林格殷格翰是全球排名前20位的制药公司之一,也是排名第二的动物保健企业。公司致力于改善人类与动物的健康，专注于探索尚未出现有效治疗方案的疾病领域。本届进博会上勃林格殷格翰将展出公司在人用药品、动物保健、生物制药和研发领域的创新产品和解决方案。如为慢阻肺和哮喘患者设计的、独特创新的软雾吸入装置能倍乐®；惠及养猪业的整合健康管理等创新案例。
Boehringer Ingelheim is a family-owned German pharmaceutical company. It is one of the world's top 20 pharmaceutical companies and is the second largest animal health business in the world. The company concentrates on developing innovative therapies that can extend patients' lives. In animal health, Boehringer Ingelheim stands for advanced prevention.

诺华集团 / Novartis AG

7.1B02-002

Address: 瑞士 Switzerland Fabrikstrasse 2, 4056 Basel
Tel:
Email: jie.tang@novartis.com
Web: www.novartis.com

诺华正在通过创想医药未来以改善人们生活质量、延长人类寿命。作为全球知名的医药健康企业，我们运用创新科学和数字化技术，在医药健康需求增长的领域创造变革性的治疗方法。在探索新药物的过程中，我们不懈创新，对研发的投资一直处于行业全球先列。在全球，超过7.5亿患者受益于诺华产品，同时，我们持续探索更多创新方式使我们的创新疗法造福更多患者。诺华在全球拥有来自超过140个国家的约10.5万名员工。
As a leading global medicines company, we use innovative science and digital technologies to create transformative treatments in areas of great medical need. In our quest to find new medicines, we consistently rank among the world's top companies investing in R&D. Novartis products reach more than 750 million people globally. About 105000 people of more than 140 nationalities work at Novartis.

辉瑞 / Pfizer Inc.

7.1B02-003

Address: 美国 United States of America New York-New York-235 East 42nd Street
Tel: 862122318418
Email: xuan.wu2@pfizer.com
Web: https://www.pfizer.com

辉瑞公司（Pfizer Inc.）创建于1849年，迄今已有约170年的历史，总部位于美国纽约，是以研发为基础的生物制药公司。辉瑞的目的是为患者带来改变其生活的突破创新。
辉瑞在全球拥有90,000多名员工，56家生产基地，业务遍及全球125个国家和地区。
Pfizer is one of the world's leading research-based biopharmaceutical companies. The company was founded in 1849 in Brooklyn, NY. Our purpose: breakthroughs that change patients' lives. Worldwide, Pfizer has approximately 90,000 employees, 56 global manufacturing facilities and operations in more than 125 markets.

医科达 / ELekta Instrument AB

7.1B03-002

Address: 瑞典 Stockholm-ElektaAB (publ) Box Sweden Stockholm-ElektaAB (publ) Box 7593.SE-10393
Tel: +86 10 5669 2881
Email: jianbin.liu@elekta.com
Web: www.elekta.com

医科达是全球领先的专注为全身肿瘤和脑部疾病提供放射治疗解决方案的国际化公司，由世界第一台伽玛刀的发明者Lars Leksell于1972 年创立，总部设在瑞典斯德哥尔摩。
医科达通过医疗技术的持续创新，不断引领行业发展的新高度，致力于为全球用户提供精准、智能、高效的放射治疗解决方案和肿瘤信息管理系统，改善、延长及挽救患者生命。
Elekta (transaction code: EKTAB) is a global leader in medical radiotherapy and neurosurgery, was incorporated in 1972 and headquartered in Stockholm, Sweden. Founded by the Swedish professor of neurosurgery who invented the first Gamma Knife in human history, it is an international company specializing in radiotherapy solutions for cancer care and brain disorders.

丹纳赫 DH Business Services LLC / DHR Business Services LLC

7.1B04-001

Address: 美国 United States of America Washington, DC-2200 Pennsylvania Avenue, NW Suite 800W
Tel: +86 21 3865 1000
Email: PYE01@beckman.com
Web: https://www.danaher.com/

Danaher is a global science & technology innovator committed to helping our customers solve complex challenges and improve quality of life worldwide. Our world class brands are leaders in some of the most demanding and attractive industries, including life sciences, medical diagnostics, dental, environmental and applied solutions. Danaher ranked 162 in 2018 with 18.3 billion dollar revenue.

罗氏集团 / Roche

7.1B03-001

Address: 瑞士 Switzerland Grenzacherstrasse 124, 4070 Basel, Switzerland
Tel: 021-28946359
Email: michelle.jiang.mj1@roche.com
Web: www.roche.com

罗氏是全球制药和诊断领域的领导者，致力于通过推动科学进步，改善人类生活。结合了制药和诊断两大业务的独特优势使罗氏集团成为个体化医疗的领导者，通过个体化医疗为每一位患者提供最具针对性的治疗方案。
Roche is a global pioneer in pharmaceuticals and diagnostics focused on advancing science to improve people's lives. The combined strengths of pharmaceuticals and diagnostics made Roche the leader in personalised healthcare – a strategy that aims to match the most specific and appropriate treatment to each patient.

瓦里安医疗 / Varian Medical Systems, Inc

7.1B03-003

Address: 美国 United States of America 3100 Hansen Way, Palo Alto, California, USA
Tel: 01087858869
Email: Fiona.Li@Varian.com
Web: https://www.varian.com

瓦里安医疗是研发和提供癌症治疗解决方案的全球领导者，以创造一个无惧癌症的世界为愿景。70多年来，我们致力于提供领先的放射治疗、放射外科、质子治疗和近距离放射治疗创新技术和解决方案，帮助全球临床合作伙伴每年为数百万患者提供治疗。瓦里安集医学产研为一体，将在第二届中国国际进口博览会上展示肿瘤治疗全产业系统，以患者为核心提供诊疗全周期服务，不断推进优质肿瘤治疗资源在中国的普及，惠及更多患者。
Varian Medical is a global leader in developing and providing cancer treatment solutions with the vision of creating a world free of cancer. For more than 70 years, we have been committed to providing leading innovative technologies and solutions for radiotherapy, radiotherapy, proton therapy and brachytherapy, helping global clinical partners to provide treatment to millions of patients each year.

欧姆龙 / OMRON Healthcare Co., Ltd.

7.1B04-002

Address: 日本 京都府-向日市-寺戸町九ノ坪53番地 Japan Kyoto-Muko-53, Kunotsubo, Terado-cho
Tel: (021) 6391-7557*234
Email: csong@gc.omron.com
Web: www.omron.com

欧姆龙是全球著名的医疗器械品牌。早在1961年，就在日本创建了专业的健康研究中心,从家庭健康监测出发,为疾病的预防、治疗提供有效的辅助，实现了家庭、医院共同管理。70年代在全球首创电子体温计和电子血压计把健康普及到家庭。秉承着专业的初心，创新拓展呼吸治疗及疼痛管理等健康领域，让健康不止于梦想。帮助每一个人掌握今天的健康，更要为每一个人的明天构筑无限可能。
Omron is a world famous medical device brand. As early as 1961, a professional health research center was established in Japan to assist the prevention and treatment of diseases for family health monitoring, achieving the joint management of families and hospitals. In the 1970s, families have access to the world's first electronic thermometer and electronic blood pressure monitor. Adhering to the.

罗氏集团 / F. Hoffmann-La Roche AG

7.1B03-001

Address: 瑞士 Switzerland Grenzacherstrasse 124, 4070 Basel, Switzerland
Tel: 021-33971610
Email: elaine.yang.ey1@roche.com
Web: www.roche.com

罗氏集团成立于1896年，总部位于瑞士的巴塞尔，是全球制药与诊断的先驱，致力于推动科学发展以改善人们的生活。制药与诊断的综合优势使得罗氏成为个体化医疗的佼佼者。个体化医疗战略旨在以最佳方式为每一位患者提供合适的治疗。
Roche, founded in 1896 with headquartered in Basel Switzerland, is a global pioneer in pharmaceuticals and diagnostics focused on advancing science to improve people's lives. The combined strengths of pharmaceuticals and diagnostics under one roof have made Roche the leader in personalised healthcare – a strategy that aims to fit the right treatment to each patient in the best way possible.

西门子医疗 / Siemens Healthcare GmbH

7.1B03-004

Address: 德国 Germany Erlangen-Siemens Healthcare GmbH,Henkestr. 127 91052 Erlangen
Tel: 13003142526
Email: zhu.ying@siemens.com
Web: www.siemens-healthineers.com

西门子医疗致力于通过支持全球医疗服务提供者在各自领域推进精准医疗、转化诊疗模式、改善患者体验以及实现数字化医疗，以全方位助力其提升价值。作为医疗科技领域的领导者，西门子医疗始终致力于产品组合的创新，并着力完善核心业务——影像诊断、临床诊疗与实验室诊断、分子医学的配套服务业务系统。此外，西门子医疗更积极推进其在数字健康服务与医疗企业管理方案领域的业务延伸。2018财年（截至2018年9月30日），西门子医疗业务的总营收为134亿欧元，调整后的利润额为23亿欧元。目前，西门子医疗在全球拥有约50,000名员工。
Siemens Healthineers enables healthcare providers worldwide to increase value by empowering them on their journey towards expanding precision medicine, transforming care delivery, improving patient experience and digitalizing healthcare. A leader in medical technology, Siemens Healthineers is constantly innovating its portfolio of products and services in its core areas of diagnostic and therapeutic imaging and in laboratory diagnostics and molecular medicine. Siemens Healthineers is also actively developing its digital health services and enterprise services.In fiscal 2018, which ended on September 30, 2018, Siemens Healthineers generated revenue of €13.4 billion and adjusted profit of €2.3 billion and has about 50,000 employees worldwide.

赛默飞世尔科技 / Thermo Fisher Scientific

7.1B04-003

Address: 美国 United States of America MA-Waltham-168 Third Avenue
Tel: 010 8794 6964
Email: yuan.li2@thermofisher.com
Web: www.thermofisher.com

赛默飞世尔科技（纽约证交所代码：TMO）是科学服务领域的世界领导者公司年销售额超过230亿美元，在全球拥有约70,000名员工。产品主要包括分析仪器、实验室设备、试剂、耗材和软件等，我们将创新技术、便捷采购方案和实验室运营管理的整体解决方案相结合，不断为客户、股东和员工创造价值。服务领域广泛，涉及食品安全、环境保护、医疗卫生、生命科学及生物制药等。
Thermo Fisher Scientific Inc. (NYSE: TMO) is the world leader in serving science, with revenues of more than $23 billion and approximately 70,000 employees globally. Our mission is to enable our customers to make the world healthier, cleaner and safer.

LLC "I`LIFE STEM CELL CENTER"

7.1C01-003

Address: 乌克兰 Ukraine Kyiv-KLOVSKY UZVIZ, BUILDING 7, OFFICE 221
Tel: +38 044 279 17 50
Email: Jeff_winner@sina.com
Web: www.ilife.name

LLC "I'LIFE STEM CELL CENTER" is a company offering a broad range of stem cell therapy and treatment services.

Curetech Skincare

7.1C01-006(001)

Address: 印度 India Himanchal Pradesh-Solan-plot no 33 & 34, Phase IV Bhatoli Kalan, Baddi
Tel: 1244113325
Email: rw@curetechskincare.com
Web: ralycos.com

Ralycos LLC is a young Cosmetic Solutions, a globally recognized manufacturer of Skincare and leader in the custom formulation of scientifically proven, naturally effective personal care products in the form of Anti-Aging cream & Serum Sun Protection creams & gels Under Eye creams Hair Shampoo, Conditioners & Serums Skin Brightening creams & serums Vitamin Serum Anti Acne products Moisturizing.

Scientific & Manufacturing Company "Ecopharm" Ltd

7.1C01-001

Address: 乌克兰 Ukraine Kyiv-Naberezhno-Korchuvatska Str. 136-B.
Tel: +380 44 594 05 95
Email: csilla.tacsik@ecopharm.ua
Web: https://ecopharm.ua

"Scientific and Manufacturing Company "Ecopharm" LTD" established in 1998 is a research-based Ukrainian pharmaceutical manufacturer that develops, produces and markets its own innovative medications.

Getinge AB

7.1C01-004

Address: 瑞典 Goteborg-Goteborg-Box 8861, 402,72 Sweden Goteborg-Box 8861, 402,72
Tel: 021-61973999
Email: shaoxi.huang@getinge.com
Web: www.getinge.com

Getinge是全球知名供应商，致力于手术室、重症监护室、医院病房、灭菌部门、以及与生命科学相关的公司和机构提供各类创新型解决方案。
Getinge is a global provider of innovative solution for operating rooms, intensive care units, sterilization departments and for life science companies and institutions.

N C P WORKS

7.1C01-006(003)

Address: 印度 India WEST BENGAL-HOOGHLY: 712232-97 G T ROAD, BHADRAKALI, UTTARPARA
Tel: +919830082253
Email: ncpw@rediffmail.com
Web: www.ncpherbal.co.in

N.C.P. Works started its business operation in the year 1972 as a Partnership firm. Providing the benefits of Ayurveda to people particularly in those segments where modern medicine does not provide satisfactory solution. In this lie the roots of N C P Works. Today we are a leading manufacturer, exporter and supplier Ayurvedic OTC FMCG products.

Kyiv Municipal Clinic #4

7.1C01-002

Address: 乌克兰 Ukraine Kyiv-17 Solomenskaya Str
Tel: +380442497846
Email: sunnyuctc@163.com
Web: http://kmkl.org

The multi-field medical clinic provides highly qualified specialized medical care to residents and non residents. The Clinic has modern therapeutic and diagnostic base for providing high-quality medical care for diseases of various types: surgical, therapeutic, neurological, orthopedic, infections and others.

InBody CO.,LTD.

7.1C01-005

Address: 韩国 ROK(Republic of Korea) InBody Bldg., 54, Nonhyeon-ro 2-gil, Gangnam-gu, Seoul 06313 KOREA
Tel: 021-64439705
Email: yanglisong@inbodychina.com
Web: www.inbodychina.com www.inbody.com

InBody创立于1996年，在当时那个体成分分析技术还不够完善的时代，成功开发了保障精确度和再现性的体成分分析仪。历经20余年，从韩国的创业型企业，发展为全球范围内的专注于研发人体成分分析仪的健康管理企业。
InBody的产品被广泛应用于医疗、健身、美容、体育等领域。目前为止，InBody已分别在美国、日本、欧洲、中国、印度设立了当地法人，为全球90多个国家提供产品和服务。
InBody is the global leader in the body composition analysis industry with world class technological advancements.The information from the InBody test allows for personalized exercise and diet programs to maintain healthy lifestyles. The InBody is widely used in various research and professional fields.

Auriga Research Pvt. Ltd.

7.1C01-006(005)

Address: 印度 India Delhi-New Delhi-3/15 Kirti Nagar Industrial Area,
Tel: 911145754546
Email: mranjan@aurigaresearch.com
Web: www.aurigaresearch.com / www.arbropharma.com

We are a leading Contract Research and Testing Organization (CRO) with a team of over 450 professionals backed by 6 state-of-the-art laboratories and DCGI & NPRA (National Pharmaceutical Regulatory Agency),Ministry of Health Malaysia approved Bioequivalence facilities.
At production side we offer SNEC 30 manufactured under AYUSH License at our WHO GMP Approved facility situated at New Delhi, INDIA.

Dr. Sabharwal's Manufacturing Labs Ltd.

7.1C01-006(006)

Address: 印度 India Chandigarh-Chandigarh-1019, Sector 27-B
Tel: +911722640018
Email: drsmpl@gmail.com
Web: www.drsabharwal.com

Dr. Sabharwal's Group Established in 1984 having GMP, ISO 9001 & ISO 13485. We at Dr. Sabharwal's strive hard to manufacture & supply world class Transdermal Drug Delivery patches like Diclofenac, Ketoprofen, Lidocaine, Capsicum & Natural Pain Relieving Patches, Surgical Dressings, Bandages like POP, Crepe, Elastic Adhesive, Wound Aid, , Ointments, Lotions, Hand sanitizers & Hand Rub.

Optima Elektro Hidrolik Ltd. Sti.

7.1C01-007(002)

Address: 土耳其 Turkey ANKARA-ANKARA-Malikoy Baskent OSB 26. Cadde No:6 Temelli - Sincan - Ankara / TURKEY
Tel: +903128151454
Email: info@optimatechnic.com
Web: www.optimatechnic.com

OPTIMA ELEKTRO is a company established to supply better and more economical solutions to various engineering requirements. Our aim is to supply high quality products and services, at the most economical basis while caring about environmental issues.
We are acting in the most complex fields such as:
- Electro Hydraulic Systems,
- Electro Mechanical Systems,
- Training,
- Medical,

NUVE SANAYI MALZEMELERI IMALAT VE TICARET A.S

7.1C01-007(003)

Address: 土耳其 Turkey Ankara-Akyurt-Saracalar Mah Saracalar Kumeevleri No:4/2
Tel: +903123992830
Email: sertanince@nuve.com.tr
Web: www.nuve.com.tr

NÜVE is a world class manufacturer of a wide range of laboratory and sterilization instruments. Building upon our 50 years of experience we offer excellent choice and value and, above all, full support to our customers. Nuve products offering high quality are exported to over 100 counties. NÜVE product range is comprehensive, covering the essential core products for most laboratories.

安能泰制药有限公司 / NAL Pharmaceutical Group Limited

7.1C01-008

Address: 香港地区 香港岛-香港铜锣湾告士打道311号皇室大廈2908室 Hong Kong Hong Kong SAR-Room 2908, 29/F, Windsor House, 311 Gloucester Road, Causeway Bay
Tel: +852-31106888
Email: BD@nalpharma.com
Web: http://www.nalpharma.com/?lang=tc

NAL Pharma is a specialty drug developer that develops novel dosage forms and proprietary drug delivery systems based on the Company's captive Bio-D3, Bio-FX, Bio-CR, Bio-NN, and Bio-MM Drug Delivery System ("DDS") technologies. For more detailed presentations and discussions, please contact us.

JIANGXI 3L MEDICAL PRODUCTS GROUP(CAMBODIA)CO.,LTD.

7.1C01-009

Address: 柬埔寨 Cambodia 西哈努克-No.4 National Road 212km, Prey Nob District, 18100, Sihanoukville, Cambodia.
Tel: 86 21 56412699
Email: zengkui_3l@qq.com
Web: www.3l.com.cn

3L医用制品柬埔寨公司坐落于柬埔寨西港经济特区内,占地10万平方米,拥有生产车间2万平方米,仓储8000多平方米,公司专业生产一次性使用医用高分子产品,主要产品有医用手术薄膜、粘贴伤口敷料、医用敷巾、压敏胶带、医用输液贴、医用外科口罩、医用手术衣、医用无菌罩单、无菌防护套等。公司已通过ISO13485质量管理体系和CE认证,目前已有医用手术薄膜、粘贴伤口敷料、医用输液贴、导尿包等多个产品获得中国医疗产品进口注册证。
3L Medical Products Cambodia Company, located in the Special Economic Zone of Sihanoukville, Cambodia, which covers an area of 100,000 square meters, at present including production workshop 20,000sqm and warehouse over 8,000sqm. The company specializes in the production of disposable medical macromolecular products,including medical surgical film,adhesive wound dressing,medical tape, mask, gown etc.

G.Samaras S.A

7.1C01-010

Address: 希腊 Greece Thessaloniki-Thermi-57001
Tel: +86 029 89654788
Email: mawei@gsamaras.cn
Web: www.gsamaras.gr

G. SAMARAS S.A. is activated in the medical gas systems since 1968, and as a result it has gained valuable experience resulting in the completion of lots of projects in Europe and abroad. A vast product portfolio to each single need.

株式会社 GEM LINK / Corporation GEM LINK

7.1C01-011

Address: 日本 东京都-台东区上野2丁目12番18号 Japan TOKYO-12-2-18, Ueno, Taito
Tel: 13818557595
Email: diocjf@163.com
Web:

本公司主要提供日本精密体检，癌症筛查，糖尿病治疗，干细胞治疗等医疗服务。
The company mainly provides medical services such as precision medical examination, cancer screening, diabetes treatment and stem cell treatment in Japan.

Broncus Medical, Inc

7.1C01-012

Address: 美国 United States of America CA-San Jose-125 Nicholson
Tel: 021-33537002
Email: jeanne.chen@broncuschina.com
Web: http://www.broncus.com

Broncus成立于2012年，是一家专注于肺部疾病诊疗技术研发和生产的高新技术企业。在中国杭州和上海,美国的硅谷及西雅图设立四个生产研发基地。公司主要研发、生产和销售基于增强现实全肺导航技术平台的肺癌、慢阻肺等肺部疾病精准微创介入诊疗产品，实现肺部疾病"早诊断、早治疗"，为肺部疾病患者提供介入诊断和治疗的一体化解决方案。
Broncus founded in 2012. The company mainly develops, produces and sells precision minimally invasive interventional treatment products for lung diseases such as lung cancer and chronic obstructive pulmonary disease based on augmented reality lung navigation technology platform, and provides an integrated solution for interventional diagnosis and treatment for patients with lung diseases.

Fusetec Pty Ltd / Fusetec 3D Pty Ltd

7.1C01-013

Address: 澳大利亚 Australia SA-Adelaide-25 Marlborough Street
Tel: +61872002413
Email: mark@fusetec.com.au fusetec@fusetec.com.au
Web: https://fusetec.com.au

Fusetec is the world's leader of anatomical models for medical training.

HOYA Corporation

7.1C02-001

Address: 日本 Japan Tokyo-Shinjuku-2-7-5 Naka-Ochiai
Tel: 021-61701408
Email: yajun.guo@pentaxmedical.com
Web:

Since its establishment in 1941 as a manufacturer specializing in optical glass, HOYA has always strived to providing cutting-edge products. HOYA is now expanding its business fields from glass products for semiconductor manufacturing and for HDDs to eyeglass lenses and contact lenses, and further to the medical field including medical endoscopes.

Gruppo San Donato

7.1C02-002

Address: 意大利 Italy MI-San Donato Milanese-Via F. Fellini, 4, 20097
Tel: +39 02912300017
Email: jing.zhou@grupposandonato.it
Web: http://www.gsdinternational.com

Gruppo San Donato是意大利顶级私立医院集团，旗下有19家全科医院，是心血管疾病治疗、神经外科、骨科、肿瘤科、妇科和泌尿科等领域的引领者。该集团提供的医疗服务均获得意大利国家健康系统(SSN)的认可，每年收治四百多万患者，以患者为中心，结合了临床、学术和科研上的优势，为每位患者提供最佳的定制护理。
Gruppo ospedaliero San Donato , founded in 1957, is today one of the leading European hospital groups and the first in Italy. It consists of 19 hospitals, 3 of which are IRCCS for a total of 5,532 beds. We treat about 4.7 million patients a year in all the specialties recognised, being among the leaders, nationally and internationally.

意泰瑞 / ITALRAY

7.1C02-003

Address: 意大利 Italy Florence-Scandicci-Via del Parlamento Europeo 9d
Tel: +390557228511
Email: recchi@italray.it
Web: www.italray.com

ITALRAY was founded in 1974 and manufactures High-Quality X-ray Imaging Systems, 100% MADE IN ITALY.
ITALRAY products are characterized by a winning combination of High European Quality & Technology and Unique Selling Points and Features.

Pac-Dent, Inc.

7.1C02-004

Address: 美国 United States of America CA-Brea-670 Endeavor Circle
Tel: +1 909.839.0888
Email: sara.qu@pac-dent.com
Web: www.pac-dent.com

Pac-Dent, Inc. offers the highest quality of dental products on the market today. Since 1992, we have provided superior services and products to our customers and have assisted them in achieving their goals. Our continual commitment to excellence have earned us the reputation as one of the best dental product manufacturers and wholesale dealers in the area.
At Pac-Dent, Inc., you receive the kind

美国药典委员会 / United States Pharmacopeial Convention

7.1C02-005

Address: 美国 United States of America Maryland-Rockville-12601 Twinbrook Parkway
Tel: +86 21 6861 9800
Email: kwc@usp.org
Web: www.usp.org

作为独立的科学机构，美国药典委员会 (USP) 与世界顶级的健康和科学领域专家共同协作,为药物、膳食补充剂和食品配料制定质量标准。通过我们的标准、倡导和培训，USP为全球公众获得优质药品、补充剂和食品提供帮助。
USP is an independent scientific organization that collaborates with the world's top experts in health and science to develop quality standards for medicines, dietary supplements, and food ingredients. Through our standards, advocacy and education, USP helps increase the availability of quality medicines, supplements and food for billions of people worldwide.

舒辅智慧医疗 / SIUVO INC.

7.1C02-006

Address: 美国 新泽西州-普林斯顿-301 Carnegie Center, Suite 100 United States of America New Jersey-Princeton-301 Carnegie Center, Suite 100
Tel: 4008208261
Email: shengjie.guo@siuvo.cn
Web: www.siuvo.com

舒辅（Siuvo）是一家来自美国专注于医疗及人工智能的高科技企业。公司致力于将先进的医疗人工智能技术与中国医疗体系发展需求相结合，放大医疗专家资源，让更多的人享受到更好更专业的医疗服务，让医疗专家无处不在！
Siuvo from US is a healthcare and artificial intelligence startup. We are committed to integrating cutting edge artificial intelligence technology with the world's most trusted medical resources to address the needs of the Chinese medical system. Through improving the medical expertise and efficiency of the current medical system, we strive to make medical expertises abundant in China.

Sedia Biosciences Corporation

7.1C02-007

Address: 美国 United States of America Oregon-Portland-4900 NE 122nd Avenue
Tel: 13911080922
Email: key4bj@hotmail.com
Web: http://www.sediabio.com

Sedia基本介绍：Sedia Bioscience的使命是通过开发创新的疾病监测和检测工具，将可触及的POCT诊断测试扩展到技术丰富和资源有限的环境中，并提供经济有效的样本采集开发，从而促进全球医疗保健的使用。我们有快速近期HIV-1检测，唾液HIV-1/2检测，唾液梅毒检测，我们正在致力于儿童疫苗的抗体检测研发.我们有不同种类的样本采集设备，如血液、唾液、干血、DNA等。
Sedia Bioscience's mission is to advance global access to healthcare, expanding accessible point-of-care diagnostic testing into both technology-rich and resource-limited settings and providing cost-effective specimen collection devices. We have Rapid Recency HIV-1 Test, Oral HIV-1/2 Test, Oral Syphilis Test. We are working on Antibody Tests for Vaccines of Children.

Ferrum Co., Ltd. / Ferrum Ltd.

7.1C02-009

Address: 瑞士 Switzerland CH-5503 Schafisheim-Industriestrasse 11
Tel: 0041628891416
Email: xijia.naegeli@ferrum.net
Web: www.ferrum.net

福莱姆有限公司于1917年成立，自从1935年生产出第一台工业离心机以来，已在全球交付超过6000台的离心机，其中在中国有超过300台离心机，已经发展成为了一家世界领先的离心机制造商。
Since Ferrum produced the first industrial centrifuges in 1935, the company has developed to a world-leading manufacturer of high-performance scraper and pusher centrifuges. Today, well-known producers from the chemical, fine chemical and pharmaceutical industries trust in the trouble-free solid-liquid separation of Ferrum centrifuges.

QRSKIN GmbH

7.1C02-010

Address: 德国 Germany 维尔茨堡-Friedrich-Bergius-Ring 15, D-97076 Würzburg
Tel: 0510-85218213-819
Email: 2149162367@qq.com
Web: www.qrskin.com

QRSKIN的使命是为所有患有严重伤口创伤的成年和年轻患者开发和生产创新和高效的伤口护理产品，如烧伤，溃疡，严重擦伤和皮肤移植手术和皮肤移植。
QRSKIN组建了一支经验丰富的管理团队，并与研发领域的领先组织密切合作，包括维尔茨堡大学组织工程与再生医学研究所以及欧洲和国外知名的烧伤中心。
QRSKIN's mission is to develop and produce innovative and highly effective wound care products for all adult and young patients who suffer from severe wound traumas as burns, ulcers, severe abrasions and skin graft surgery and skin transplants.Epicite Hydro, its new product brings the new and cost-effective treatment concepts.

三星 / SAMSUNG

7.1C03-002

Address: 韩国 ROK(Republic of Korea) Gyeonggi-do-Alpharium Tower-2-dong Alpharium Tower, 145, Pangyoyeok-ro, Bundang-gu, Seongnam-si, Gyeonggi-do, Republic of Korea
Tel: 01081007360
Email: vivina.fan@samsung.com
Web: www.samsungmedison.com

三星电子借助其技术与资源优势，全力进入医疗健康产业，包括医疗器械、生物制药、可穿戴设备及三星医疗院等。借助全球领先的IT，通讯、显示器、半导体、重工设计、软件开发等优势资源，并通过自主研发及行业整合,不断研发生产先进的医疗设备，产品涵盖超声系统、临床检验系统、放射系统等领域；提供医疗所需的全方位立体服务。
Samsung Medison, an affiliate of Samsung Electronics, With a mission to bring health and well-being to people's lives, the company manufactures diagnostic ultrasound systems around the world across various medical fields. Samsung Medison has commercialized the Live 3D technology in 2001 and since being part of Samsung Electronics in 2011。

Morgan Star Group Kft

7.1C03-005

Address: 匈牙利 Hungary 1093, Budapest, Lónyay utca 29
Tel: 13301975139
Email: 624220331@qq.com
Web: www.morganstargroup.com

Morgan Star Group - MSG总部位于匈牙利布达佩斯，集团致力于融合中欧文化，创新发展，经过10多年的精心打造，集团在高新科技产业、文化事业、医疗大健康行业、投资金融等领域拥有丰富的经验，在中东欧有着广泛的影响力。集团是匈牙利中资机构常务理事单位，是“一带一路”倡议与“16+1”合作的海外对接单位之一，也是中国南南合作促进会的理事单位。
Morgan Star Group, headquartered Budapest, Hungary, is dedicated to innovation and resource integration in its operation. MSG wins itself the credit and experience from the industries of culture exchange, High-tech researching, medical and health, sport and education and famous brands, so that MSG has good reputation in China.

LöWENSTEIN MEDICAL GMBH CO KG

7.1C02-011

Address: 德国 Bad Ems-ARZBACHER STRAßE 80, D56130 BAD EMS, Germany Bad Ems-ARZBACHER STRAßE 80,
Tel: 67875997
Email: admin@bjeve.com
Web: www.hul.de

公司总部设在德国拜德-厄姆斯（Bad Ems）
创建于1946年，在德国设有20多个分支机构，拥有强大的技术支持。
欧洲高端麻醉机制造商。
专业小儿医疗产品的研发和生产。
全球三大“小儿呼吸机”生产厂家之一。
公司医疗部有近1500余名雇员，HEINEN公司制造的拥有自主知识产权的产品在世界各地得到了广泛应用，产品行销欧洲、北美、亚洲、非洲等地。
The company is headquartered in Bad Ems, Germany.
Founded in 1946, it has more than 20 branches in Germany with strong technical support.
European high-end anesthesia machine manufacturer.
Development and production of professional pediatric medical products.
One of the world's three largest "pediatric ventilator" manufacturers.
The company's medical department has nearly 1,500 employees.

嘉德诺健康集团 / Cardinal Health

7.1C03-003

Address: 美国 俄亥俄州-都柏林-7000 Cardinal Place United States of America Ohio-Dublin-7000 Cardinal Place
Tel: 021-3279 7253 / +8621-3279 7253
Email: miya.mao@cardinalhealth.com
Web: https://www.cardinalhealth.cn https://www.cardinalhealth.com

嘉德诺健康集团（CardinalHealth）是全球性综合医疗服务与产品公司，为全球的医院、医疗保健系统、药房、门诊手术中心、临床实验室和全球医生办公室提供定制化解决方案。凭借多年医疗领域的专业经验，嘉德诺在近46个国家拥有约50,000名员工，2019年财富世界500强排名第38位，同时于该榜单中全球医疗企业排名前十。嘉德诺健康集团多元化的医疗业务遍及全球，目前在中国的核心业务包括血管介入及患者康复两大事业部。
Cardinal Health, Inc. is a global, integrated healthcare services and products company, providing customized solutions for hospitals, healthcare systems, pharmacies, ambulatory surgery centers, clinical laboratories and physician offices worldwide. Backed by nearly 100 years of experience, with approximately 50,000 employees in nearly 46 countries, Cardinal Health ranks #38 on the Fortune 500.

GENERAL MEDICAL MERATE S.P.A.

7.1C03-001

Address: 意大利 Italy Via Partigiani,25 Seriate(BG)24068,Italy
Tel: 13917303956
Email: hoffem@163.com
Web:

创新能力和设计能力：GMM设想每一种产品，将其综合的技术与未来的愿景结合在一起。GMM产品的设计确保了pa的全面安全。这就是为什么GMM品牌是顶级质量和无与伦比的可靠性的代名词。
Aptitude to innovation and design ability: GMM conceives each product conflating its consolidated know-how with the vision of the future. GMM products are engineered to ensure total safety for the patient as well as the utmost efficiency for the operator: this is why GMM brand is synonymous of top quality and unmatched reliability.

FMI Medical Systems, Inc.

7.1C03-004

Address: 美国 United States of America OH-Solon-Solon Road Unit A
Tel: 18658527382
Email: tiantian.jin@minfound.com
Web: www.fmimed.com.cn

FMI是美国一家致力于研发、生产、销售、服务高端医学影像设备的高科技公司，其母公司为明峰医疗系统股份有限公司。在中美两地科学家的共同努力下，公司已经成功研发出具有自主知识产权的CT和PETCT并成功推向全球市场，已获得中美欧多国的医疗销售许可证书包括CFDA，CE，FDA等。
The FMI Operations in the US has focused on Research and Development and designing high-end medical imaging equipment in collaboration with the Research and Development team at MinFound. Together we have successfully developed CT and PET/CT Systems, and successfully obtained the CFDA, CE and FDA to sell the products worldwide.

海博来国际医疗技术有限公司 / Crises Research Center

7.1C03-006

Address: 立陶宛 考纳斯-Prancūz 街道 62-23号 Lithuania Kaunas-4 Prancūz g. 62-23
Tel: +370 699 06543
Email: paulius@smp.lt
Web: https://www.hybridlab.com

HybridLab is a cutting-edge medical simulation education system, combining mastery learning, distance learning and AI. It provides a holistic IoT solution to medical simulation centers, enabling them to standardize clinical skills to a high degree and effectively develop next-generation medical talents. We are now seeking partners in China to cooperate on further research and development projects.

Global Link Medical Group Inc.

7.1C03-007

Address: 美国 United States of America 5388 Arrow Hwy, Montclair, CA 91763
Tel: 13991101360
Email: hollyxgm@glmedicalgroups.com
Web: https://www.glmedicalgroups.com/

In Global Link Medical Group Inc, we provide world-class treatment, using the most up to date tried and tested technology. We are SonoCiné exclusive distrubutor in China, Hong Kong and Macau. All members of our team have a proven track record in delivering patient care of the highest standard, and share a reputation for clinical excellence.

葛兰素史克 / GlaxoSmithKline

7.1C04-002

Address: 英国 United Kingdom Middlesex-Brentford-980 Great West Road
Tel: 021-23019738 / 21 23019738
Email: sophia.t.xia@gsk.com
Web: http://gsk-china.com/zh-cn / www.gsk.com

我们是一家肩负特殊使命、以科学为导向的全球医疗保健公司。我们的目标是成为最具创新性、绩效最出色，并且值得信任的全球医疗保健公司之一。我们在全球拥有三大业务，致力于研究、开发和制造创新的处方药、疫苗和消费保健品。
我们的使命是帮助人们做到更多、感觉更舒适、生活更长久。100多年来，GSK一直致力于帮助改善中国人民的健康、生活和未来。
We are a science-led global healthcare company with a special purpose. Our goal is to be one of the world's most innovative, best performing and most trusted healthcare companies.
Our purpose is to help people do more, feel better, live longer. As GSK, and through our heritage companies, we have a 100-year legacy of helping to transform the health, lives, and futures of people around China.

美敦力 / Medtronic plc

7.1C05-001

Address: 美国 United States of America Dublin-20 On Hatch, Lower Hatch Street, Dublin 2, Ireland
Tel: 021-20325269
Email: teresa.fang@medtronic.com
Web: https://www.medtronic.com

美敦力的总部设在爱尔兰都柏林，是一家全球化的医疗科技、服务和解决方案提供者，致力于为全球千百万人减轻病痛、恢复健康、延长寿命。美敦力有超过90,000名员工，在全球150多个国家和地区为医生、医院和患者提供服务 。与全球的合作伙伴携手，共同推动医疗事业的发展。Further, Together。欲了解更多信息，请访问全球官网www.medtronic.com和大中华区官网 https://www.medtronic.com/cn-zh/index.html。
Medtronic plc (www.medtronic.com), headquartered in Dublin, Ireland, is among the world's largest medical technology, services and solutions companies – alleviating pain, restoring health and extending life for millions of people around the world. Medtronic employs more than 90,000 people worldwide, serving physicians, hospitals and patients in more than 150 countries and regions. The company is focused on collaborating with stakeholders around the world to take healthcare Further, Together.

达视光学设备技术（上海）有限公司 / STAAR SURGICAL AG

7.1C03-008

Address: 瑞士 尼道-2560-Hauptstrasse大街104号 Switzerland NIDAU-2560-Hauptstrasse 104
Tel: 021-52650538
Email: lfu@staar.com infochina@staar.com
Web: https://www.staar.com

STAAR Surgical是一家生产、销售眼科医疗产品的高科技全球性公司，也是纳斯达克上市公司。美国总部设于洛杉矶，国际总部位于瑞士，在世界各国设有销售部。
STAAR Surgical的EVO Visian ICL晶体植入术为全球视力矫正领域带来革命性的突破，具有视觉质量高、不切削角膜、无回退等手术特点，尤其是晶体专利材料Collamer具有极高的生物相容性，术后与人体自然眼球无任何排斥反应并且保持长久稳定。
STAAR Surgical designs, develops, manufactures and markets implantable lenses for the eye and companion delivery systems. These lenses are intended to provide visual freedom to patients, lessening or eliminating the reliance on glasses or contact lenses.STAAR sells EVO Visian ICL in more than 75 countries, and it has been implanted in more than 1000,000 eyes worldwide.

贝朗集团 / B.Braun Group

7.1C04-003

Address: 德国 黑森州-梅尔松根-Schwarzenberger Weg 73-79 Germany Hessen-Melsungen-Schwarzenberger Weg 73-79
Tel: 021-22163315
Email: yuki.yang@bbraun.com
Web: www.bbraun.cn

贝朗于1839年成立于德国的梅尔松根地区，在全球64个国家拥有超过58,000名雇员。经历了近两个世纪的风雨历程，几代人的默默传承，贝朗已经成为当今世界领先的医疗设备、医药产品和服务供应商之一。贝朗致力于为输液、麻醉、透析、神经外科、脊柱外科、糖尿病护理、临床营养学、伤口管理、感染预防等相关治疗领域提供解决方案，产品线由5,000 多种不同类型的产品组成，其中95%的产品是由贝朗自主生产。
B. Braun is one of the world's leading providers and manufacturers of healthcare solutions today. Every service that B. Braun provides incorporates the entirety of our knowledge and skills, the company's deep understanding of users' needs, and extensive expertise since 1839. In total, the B. Braun product range comprises 5,000 different products, 95 percent of which are manufactured by the company.

Fochon Pharma,Inc

7.1C05-002

Address: 美国 United States of America CA94577-Suite 207 San Leandro -1933 Davis Street
Tel: 18516171313
Email: gujie@fosun.com
Web: www.fochon.com

Fochon Pharmaceuticals, Ltd. is a pharmaceutical company focusing on research and development (R&D) of small-molecule drugs for advancing best-in-class therapies to improve human lives.
Fochon has a proven track record of accelerating the discovery of best-in-class potential small-molecule therapeutics to clinical development for cancer and metabolic diseases.

拜耳 / Bayer Aktiengesellschaft

7.1C04-001

Address: 德国 Germany Leverkusen 51373-Kaiser-Wihelm-Allee 1
Tel: 86-21-61593378
Email: david.sheng@bayer.com david.sheng.@bayer.com
Web: www.bayer.com

拜耳作为一家跨国公司，在生命科学领域的健康与营养方面具有核心竞争力。公司致力于通过产品和服务，帮助人们克服全球人口不断增长和老龄化带来的重大挑战，造福人类。
Bayer is a global enterprise with core competencies in the life science fields of health care and nutrition. Its products and services are designed to benefit people by supporting efforts to overcome the major challenges presented by a growing and aging global population.

Air Natural Capacity Solution GmbH

7.1C04-004

Address: 德国 Germany Nordrhein-Westfalen-Duesseldorf-huettenstr.1
Tel: 004922346985361
Email: info@active-air.com
Web: www.active-air.com

Air Natural Capacity Solutions GmbH mit Hauptsitz in Deutschland bietet Gesundheitsprodukte für den globalen Markt an.
Bieten Sie innovative Produktlösungen durch innovative Technologien.

珀金埃尔默股份有限公司 / PerkinElmer,Inc.

7.1C06-001

Address: 美国 马萨诸塞州-沃尔瑟姆-Winter街940号 United States of America Massachusetts-Waltham-940 Winter St.
Tel: 021-60645609 / +86 21 60645609
Email: ping.xue@perkinelmer.com
Web: https://www.perkinelmer.com.cn

珀金埃尔默致力于为创建更健康的世界而持续创新。我们为诊断、生命科学、食品及应用市场推出独特的解决方案，助力科学家、研究人员和临床医生解决棘手的科学和医疗难题。凭借深厚的市场了解和技术专长，我们助力客户更早地获得更准确的洞见。在全球，我们拥有12500名专业技术人员，服务于180多个国家，时刻专注于帮助客户打造更健康的家庭，改善人类生活质量。
PerkinElmer enables scientists, researchers and clinicians to address their critical challenges across science and healthcare. We deliver unique solutions to serve the diagnostics, life sciences, food and applied markets. Our dedicated team of 12,500 employees worldwide is passionate about helping customers work to create healthier families, improve the quality of life.

希森美康株式会社 / Sysmex Corporation

7.1C06-002

Address: 日本 Japan 1-5-1,Wakihama-Kaigandori, Chuo-ku,Kobe,Japan
Tel: 021-20524666
Email: maxiaoyan@sysmex.com.cn
Web: www.sysmex.com.cn

Sysmex 在体外诊断为中心，是血液学、凝血、尿液（沉渣）三个分支领域的全球市场领跑者，此外，Sysmex正在亚洲积极扩展业务领域，将触角延伸至生化、免疫等领域，作为体外诊断行业的先导，应对多种多样的跨领域需求的同时，专注于癌症和其他疾病检测的生命科学领域。
In the IVD domain, Sysmex provides instruments, reagents and software globally. We have obtained the top share of the global market (including alliances) in the three fields of hematology, hemostasis and sediment urinalysis. In addition to these three fields, we are developing businesses in immunochemistry and other fields in Asia, and as the leading company in the IVD domain we respond to a diver.

日本光电工业株式会社 / NIHON KOHDEN CORPORATION

7.1C06-003

Address: 日本 东京-新宿-西落合1-31-4 Japan TOKYO-Shinjyuku-NO.4, 31Block, Lane 1, Nishiochiai
Tel: 021-62700909
Email: min_dong@mb1.nkc.co.jp
Web: https://www.nihonkohden.co.jp/information/company.html

日本光电工业株式会社是一家主要从事医用电子器械研发、生产和销售的领先企业，子公司主要设立在美国，欧洲和亚洲，其经销商几乎遍布世界每一个国家及地区。
Nihon Kohden is Japan`s leading manufacturer, developer and distributor of medical electronic equipment with subsidiaries in nearly every country in the world. Nihon Kohden equipment is well known for its quality and ease of use. Founded in 1951, our mission is to improve the quality of life through advanced medical technology.

德国爱尔博电子医仪器公司 / Erbe Elektromedizin GmbH

7.1C06-004

Address: 德国 Germany Baden-wurttemberg-Tuebingen-Waldhoernlestrasse 17, D-72072
Tel: +862162758440*137
Email: maoshanjing@erbechina.com
Web: de.erbe-med.com

德国爱尔博电子医疗仪器公司创建于1851年，总部位于德国南部大学城蒂宾根。目前主导产品高频电外科工作站、氩气刀、水刀以及冷冻治疗仪等。
ERBE Elektromedizin GmbH was created in the year of 1851 in Tübingen, Germany,and has 167 years history.Our products mainly focus on electrosurgery,plasmasugery,hydrosurgery and cryosurgery.

安科锐亚洲有限公司 / ACCURAY ASIA LIMITED

7.1C07-001

Address: 香港地区 香港尖沙咀廣東道5號海港城海洋中心910-11室 Hong Kong Units 910-11, Ocean Centre, Harbour City, 5 Canton Road, T.S.T, Hong Kong
Tel: 13911315652
Email: wicky.he@cnncaccuray.com
Web: www.accuray.com

Accuray是一家放射肿瘤治疗公司，致力于发展、生产及销售引领医护标准的个人化、创新治疗解决方案，旨在延长患者的寿命及提高他们的生活质量。本公司的先进技术提供全方位的放射治疗和放射手术治疗。我们的理念：开创一个新的未来，让癌症患者不再遭受恐惧和痛苦。我们的使命：制定个人化、先进的治疗解决方案，延长患者的寿命及提高他们的生活质量。我们的治疗方案的重要性：患者–Accuray透过创新，延长癌症患
Accuray Incorporated (Nasdaq: ARAY), based in Sunnyvale, Calif., is the premier radiation oncology company. The company develops, manufactures and sells personalized, best-in-class treatment solutions that revolve around the patient.

德尔格制造股份两合公司 / Drägerwerk AG & Co. KGaA

7.1C06-005

Address: 德国 Germany Schleswig-Holstein-Lübeck-Moislinger Allee 53-55
Tel: 021-31086377
Email: guangcheng.dong@draeger.com
Web: www.draeger.com

德尔格是医疗和安全技术的国际先行者。德尔格于1889年成立于德国吕贝克（现今总部），作为一个家族经营的企业已经历经第五代，走向了全球并且列入德国DAX 股票指数。
Dräger manufactures medical and safety technology products. Founded in Lübeck in 1889, Dräger has grown into a worldwide, listed enterprise in its fifth generation as a family-run business. Dräger has more than 14,000 employees worldwide and is present in over 190 countries around the globe.

Planmeca Oy

7.1C06-006

Address: 芬兰 Finland Helsinki-Asentajankatu 6
Tel: 010-65060508
Email: megan.du@planmeca.com
Web: www.planmeca.com

Planmeca Oy was founded in Helsinki, Finland, by Mr. Heikki Kyöstilä in 1971.Planmeca Oy is a global leader in many fields of health care technology, with products distributed in over 120 countries worldwide. Our product range covers digital dental units, world-class 2D and 3D imaging devices, comprehensive CAD/CAM ,3D Printer and software solutions. Headquartered in Helsinki, Finland, we are the

卡尔史托斯 / KARL STORZ SE & Co. KG

7.1C07-002

Address: 德国 Germany Tuttlingen-Dr.-Karl-Storz-Strasse 34
Tel: 021-60339888
Email: Marco.Zhang@karlstorz.com.cn
Web: https://www.karlstorz.com

卡尔史托斯是世界内窥镜产品的发明者和领导者，于1945年即开始在德国的规模化生产。我们为超过40个国家提供逾15,000种内窥镜医疗器械产品，涵盖人类医学，动物医学，以及工业内窥镜应用领域。在卡尔史托斯，我们用匠心多样的内窥镜产品提升人类生命品质，这是我们承肩之使命，过去是，未来都是。
■ 发明引领创新
■ 艺术菁华服务
■ 精缜心牵需患
■ 传承凝生未来
Began quantity production in 1945 in Germany, KARL STORZ Company is the world’s inventor and prominent global leader for endoscopy products and integrated operating room solutions. We offer more than 15,000 endoscopic instruments for human, veterinary, and industrial applications in over 40 countries.

奥咨达 / OSMUNDA Medical Technology Service GmbH

7.1C07-003

Address: 德国 Germany 10787 Berlin-keithstr.2-4
Tel: +86 (0)20 6231 6262
Email: osmunda@osmundacn.com
Web: www.osmundacn.com

奥咨达是全球领先的医疗器械第三方产业平台（CDMO+CRO+CSO），包含医疗器械研发转化及生产制造平台、全球注册及临床试验平台、医疗器械管理云平台、投融资服务平台和产业服务平台。奥咨达拥有强大的医疗器械专业数据库、项目管理平台和研发制造基地。300多位医疗器械技术专家分布在全球12家分公司，为全球医疗研发者、企业、政府提供全方位、一站式的医疗器械产业解决方案，至今已为国内外3000多家医疗器械企业提供了专业服务。
OSMUNDA Medical Device Service Group is a leading industry-wide third-party service platform for medical devices across the world (CDMO+CRO+CSO), serving the medical device industry with a platform of medical device incubation and contract manufacturing, a platform of global registrations and clinical trials, a medical device management cloud platform, an investment and financing service platform.

汉森日本株式会社 / Hansen Japan Ltd

7.1C07-005

Address: 日本 Tokyo-Chuo-ku-w16F Harumi Island Triton Squre Office. Tower, 1-8-8, Japan Tokyo-Chuo-ku-w16F Harumi Island Triton Squre Office Tower, 1-8-8,
Tel: 021-52806983
Email: jmz@crealtd.com
Web: http://hansen.co.jp/

汉森日本株式会社成立于2015年10月，资本金：9，050万日元（2017年9月现在）经营内容包含：太阳能发电系统等住宅相关器械·耗材等进出口、销售业务、LED照明器械、白炽灯、荧光灯管等及相关器材的进出口、贩卖业务，节能蓄电池商品相关业务以及保健美容器械进出口业务。
Hansen Japan Co., Ltd. was founded in October 2015, with capital of 90.5 million yan (now September 2017). Its business contents include: import and export of residential related equipment, such as solar power generation system, consumables, sales, import and export of LED lighting equipment, incandescent lamps, fluorescent tubes and other related equipment.

JMS CO.,LTD.

7.1C07-006

Address: 日本 广岛市-中区-加古町12番17号 Japan HIROSHIMA 730-8652 JAPAN - NAKA-KU-12-17 KAKO-MACHI
Tel: 010-60539098
Email: 41142082@qq.com
Web:

JMS CO., LTD. was established in 1965, listing on the Tokyo stock exchange first section since 1981. The headquarters are located in Hiroshima and Tokyo, Japan.JMS has three factories in Japan and oversea factories/Sales office. Exclusive distributor for JMS CDDS in China, Shanghai YinTao Medical Devices Co., Ltd.

Hamilton Medical AG

7.1C07-007

Address: 瑞士 Switzerland Graubünden-Chur-Via Crusch 8 CH-7402 Bonaduz
Tel: +41 58 610 10 20
Email: info.med.cn@hamilton-medical.com
Web: https://www.hamilton-medical.com

Since 1983, Hamilton Medical has been developing intelligent ventilation solutions that provide safer care for critically ill patients and make life easier for the people who care for them. Today, Hamilton Medical is a leading manufacturer of critical care ventilation solutions for a wide variety of patient populations, applications, and environments.

TRANCEWORK / TRANCEWORK INTERNATIONAL

7.2A0-001

Address: 日本 東京都-東京市-墨田区緑4-20-9 宮野ビル6階 Japan TOKYO-TOKYO-6F MIDORI 4-20-9 SUMIDA-KU
Tel: 021-62363869*18
Email: js@shjasonltd.com
Web: www.wellnessjp.net

公司主营业务专注于为中国客户提供赴日体检及医疗，及医疗美容服务，为中国顾客提供赴日前咨询、签证办理咨询、联系预约医院和专家、专业医学翻译等医疗咨询服务。公司与日本多家专门医院建立了信任协作关系，为客户提供细致周到的服务。除了医疗服务之外，公司还与多个日本医疗保健产品建立了深厚的合作关系,为中国消费者提供放心，安心，效果显著的日本保健产品。
Our company is specialized in providing service for chinese customer of medical examination and medical treatment. We have built long and deep relationship with famous hospitals in Tokyo, Osaka and main japanese cities. Besides medical examination and treatment, we also sell suppliment of japanese brands.

EH Hongkong Trading Co.,Limited

7.2A0-002

Address: 香港地区 香港九龙长沙湾72号昌明大厦8楼B室 Hong Kong Room B, 8th floor, Changming Building, 72 Changsha Bay, Kowloon, Hong Kong
Tel: 86 21 68812311
Email: robert_wl2004@163.com
Web:

睿智香港实业有限公司主营代理高档生活用品，运动医疗护具产品。秉承始终追求精品的产品制造和商业诉求，一直专注于向顾客提供真心的服务。以开朗快乐健康为口号，努力为顾客提供最高级的产品和服务。
EH Hongkong Trading Co.,Limited mainly agent high-class household goods, sports medical products.

韩国波斯卡科技集团 / Pulsecam Life & Care Co.,Ltd.

7.2A0-003

Address: 韩国 京畿道-安山市-常绿区中洑1路22号 ROK(Republic of Korea) Gyeonggi-do-Ansan-si-22,Jungbo 1-gil,Sangnok-gu,
Tel: 86-10-57109581
Email: pulsecamzb@163.com
Web: www.pulsecam.com.cn

韩国pulsecam科技集团是以高新科技应用为核心的国际化运营科技集团。目前业务遍布全球30多个国家，业务涉及智能健康生活创新产业、高端家庭医疗器械、纳米银产品等领域，集自主创新、研发、生产、销售为一体，获得全球多项专业领域的世界级认证和奖项。
Pulsecam Life & Care Co.,Ltd.,started research & development in January 1998.Developed a home & medical use low frequency stimulator by solely depending on our independent technology and until now we are providing customer satisfying services & creating a customer value.

泰国金顺泰乳胶制品有限公司 / T.T.S.LATEX RPODUCTS CO.,LTD

7.2A0-004

Address: 泰国 北榄府-挽匹县-呈帕叻路他纳实巷第十九村门牌八十八之八号 Thailand Samut Prakan Province-No. 88/8,Mu19, Soi Thanasit, Thepharak Road, Bang Phli Yai Sub-district, Bang Phli District,
Tel: +66 27443101
Email: info@asean-china.org
Web:

T.T.S. LATEX PRODUCTS CO.,LTD. Build up from based on ideas of the Chairman of Board is Mr.Butang Lapthanaworakhunchai and Mr.Surasak Theptong (Professional Advisor) (Head of Rubber Technology and Polymer Trang Technical College) whom is specialist in the design, formulation and process of 100 % natural rubber products.

泰国金顺泰饮品有限公司 / T.T.S.BEVERAGE. CO., LTD

7.2A0-005

Address: 泰国 Samut Prakan Province-Bang Phli District-No. 88/8,Mu19, Soi Thanasit, Thepharak Road, Bang Phli Yai Sub-district, Thailand Samut Prakan -Bang Phli -No. 88/8,Mu19, Soi Thanasit, Thepharak Road, Bang Phli Yai Sub-district,
Tel: +66 27443101
Email: info@asean-china.org
Web:

泰国金顺泰集团旗下“金顺泰燕窝”是一家具有百年历史的燕窝品牌。公司旗下拥有一万多平方米现代化燕窝生产工厂，完整效率的生产流水线，其独特的古法秘制100%天然即食燕窝、冰糖燕窝饮品系列均得到欧美多个国家高标准认证。
T.T.S.BEVERAGE produce bird's nest with a history of 100 years. The company has more than 10,000 square meters of modern production factory, with complete and efficient production line to make bird's nest. its product that include unique ancient secret 100% natural instant bird's nest, rock candy bird's nest drink.

泰国五丰集团有限公司 / Thai Benjahong Group Co., Ltd

7.2A0-006

Address: 泰国 Thailand Bangkok-Bangna-33 Soi 25 Bang-Trad Rd.,
Tel: +66 27443101
Email: info@asean-china.org
Web:

泰国五丰集团(Thai Benjahong Group)2012年创立于泰国曼谷，主要以进出口贸易、代理等为主要业务的泰国企业。公司主要以经营乳胶寝具，包括乳胶枕、乳胶床垫等产品。
The Thai Benjahong Group was established in 2012 in Bangkok, Thailand. The company focus on the trading in Latex products, which including the latex pillow, latex mattress etc.

Celex Laboratories Inc.

7.2A0-007

Address: 加拿大 Canada BC-RICHMOND-115-21600 WESTMINSTER HWY
Tel: 6042316077
Email: info@celexlaboratories.com
Web: www.celexlaboratories.com

30 years ago, we opened our manufacturing facility in the bustling Vancouver, BC, Canada. Since then, our idea of nature health has revolutionized the life of many.
At Celex, we believe the best source of nutrients always come from nature. We carefully select, source and process all ingredients. All our products deliver the ultimate maximum health value from mother nature.

Folotto Pharmaceuticals Group US, Inc.

7.2A0-008

Address: 美国 United States of America FL33186, U.S.A佛罗里达州 美国-Miami-14261SW 120th St#103-281
Tel: 400-888-3430
Email: 1362514552@qq.com
Web: www.folotto,com

FOLOTO PHARMACEUTICALS GROUP US, INC. adheres to the enterprise tenet of taking human health as the foundation, satisfying the market as the orientation, taking product quality as the life and quality service as the soul. Fielder is headquartered in Miami, USA. We cultivate the market with word of mouth and win customers with strength. We strive to build a model brand of imported dietary suppleme.

Byron Investments Limited

7.2A01-001

Address: 斐济 Fiji Suva-Level 6, FNPF Place, Victoria Parade,
Tel: 6793312244
Email: gracebingbingchai@gmail.com
Web:

Byron Investments Limited based in Suva, the capital of Fiji is focusing on promoting Pacific Islands economic development especially Fiji Islands through building economic links for Pacific business to the world's second largest economy, China, by exporting Fiji beers, Noni Products, Dilo products &Fijian-made aiming to create more opportunities to enhance Brand "South Pacific Islands" in China.

Osebrg Pharma AS

7.2A01-002

Address: 挪威 Norway Tonsberg-Storgt,17
Tel: +(47) 98858888
Email: eliaschina@vip.163.com
Web: http://osebergpharm.hk.dotodocn.com/index.html

品质好源于挪威的无污染原生态的环境，纯度高，无杂质，纯天然。
我们的研究人员根据东方人的的生理结构特点和环境气候的特征，取用挪威其得天独厚，纯净深海的海洋资源，精心研制开发了四个系列20多个产品，产品质量均达到了欧盟食品卫生标准，并通过国际GMP认证。
Oseberg products originate from Norway. Our policy is innovation, great quality and high reliability. We take pride in making products with excellent quality and achieving high health and safety standard. Our mission is to build first class international brand, we help you to enjoy good health and extended quality life with your family.

Nordkost AS

7.2A01-003

Address: 挪威 Norway Ensjøveien 14, 0655 Oslo
Tel: +47 21659065
Email: post@nordkost.com
Web: http://nordkost.com

Nordkost is a Nordic-based consulting firm that focuses on internationalising health and wellness products/services.
Nordkost company was founded in Oslo, Norway in 2013. Besides providing services in cross-border e-commerce, our services are now including logistics, payment solution and marketing for Nordic companies to access the Chinese market.

Primex BioChemicals AS

7.2A01-004

Address: 挪威 Norway Rogaland-Haugesund-Sørhauggata 217
Tel: +47 91894465
Email: bjarte.langhelle@primex.no
Web: www.marinematrix.com

Primex BioChemicals AS is a Norwegian manufacturer of Marine Matrix® beauty supplements, a top beauty brand in Scandinavia. Every ingredient in our formulations is carefully selected and quality-assured based on purity, science and efficacy. Through R&D, innovative solutions and strict quality control, our passion lays in offering safe, sustainable and user-friendly products with maximum impact.

SOLSONE AS

7.2A01-005

Address: 挪威 Norway Oslo-Oslo-Ensjøveien 14, 0655, Oslo
Tel: +4746252919 / +47 46252919
Email: kai.yao@solsone.no
yaokaibt@hotmail.com
Web: solsone as 912 435 717
www.solsone.no

SOLSONE AS是家专注于北欧健康领域的跨境供应链服务商，经营的范围包括产品供应链，跨境物流链以及跨境咨询服务等。公司使命是致力于提供一站式的解决方案，为中国及北欧消费端搭设信息通道，帮助北欧企业持续不断的在中国市场成长。
Solsone AS is a Nordic-based firm which mainly focusing on health and wellness products and related services to ensure the one-key-solution service.
Solsone company was founded in Oslo in 2013. Besides providing services in cross-border e-commerce,we also provide logistics services to ensure the one-key-click solution service, and marketing for Nordic companies to access the Chinese market.

BioGaia AB

7.2A01-006

Address: 瑞典 Sweden Lund-SE-223 62-Mobilvägen 10
Tel: 18618315809
Email: chaoshi@naturespan.com
Web: http://www.biogaia.cn

BioGaia是一家来自瑞典的创新生物科技公司，BioGaia是益生菌行业的领军者，开发销售益生菌相关的产品和解决方案，促进人类健康。BioGaia产品综合了世界上研究最广泛的益生菌之一罗伊氏乳杆菌，和行业内最尖端的工程技术，开发了一种能很好满足客户需要的良好的供给系统。罗伊氏乳杆菌是一种“友好”的细菌，能够帮助我们击败在胃肠道中“环”的微生物，改善机体健康状况。
BioGaia is an innovative biotechnology company from Sweden. BioGaia is a leader in the probiotic industry, developing and marketing probiotics related products and solutions to promote human health. BioGaia's products combine one of the world's most widely studied probiotics, lactobacillus reuteri, with the industry's most cutting-edge engineering technology to develop a robust supply system that.

PharmaCare Laboratories Pty Ltd

7.2A01-007

Address: 澳大利亚 Australia NSW-Warriewood-18 Jubilee Avenue
Tel: + 61 2 9997 1466
Email: yudi.tang@pharmacare.com.au
Web: webenquiries@pharmacare.com.au

PharmaCare is more than just a health and wellness company.
We believe in what we do, because we are an Australian company that lives and breathes good health, optimal wellness, core family values, the Australian spirit and way of life, and beauty and joy from the inside out. PharmaCare sell products to over 5000 pharmacies, 3000 supermarkets as well as online and variety stores across Australia.

NATURAL PHARMACEUTICALS AUSTRALIA PTY LTD

7.2A02-001

Address: 澳大利亚 Australia QUEENSLAND-WILLAWONG-UNIT 15, 16 MAHOGANY COURT
Tel: +61739025100
Email: JANESUN@NPAS.NET.AU
Web: www.naturesnaturals.com.au

Natural Pharmaceuticals Australia Pty Ltd (NPA) was established in 1990's in Brisbane Australia. NPA, Australian owned, is keeping its promise to supply products made in Australia to local and export markets. NPA owns vitamin brands Natures Naturals, NPA Natural, Suns Natural Products and skin care brand Angelina. NPA has registered the Chinese Trademark of Natures Naturals and Angelina in China.

Aurora Pharmaceuticals Australia Pty Ltd

7.2A02-002

Address: 澳大利亚 Australia Australia-Sydney-Suite 326-330, Level 3, 401 Sussex Street Sydney NSW 2000, AUSTRALIA
Tel: 86-07552557890
Email: zhongliting@darichful.com
Web:

Australia Aurora Pharmaceutical Co., Ltd. is a company specializing in the production of dietary supplements, adhering to the "focus on nutrition, green health" concept, the production of a full range of key foods.

FLOREVE PARIS

7.2A02-003

Address: 法国 France Ile de France-Neuilly-sur-Seine-18 Rue du Château
Tel: +33 660256680
Email: maisang@floreveparis.com
Web: https://www.floreveparis.com/zh/ https://www.floreveparis.com/en

巴黎馥洛薇研发出一套内养外护的美容营养液。通过食物疗法，活性成分被身体更好地吸收，由内深层滋养全身，效果更彻底，更持久。
数千年以来，大自然宝库赋予我们很多珍贵的植物及其强大的自然能量,治疗和保持我们身心的健康。传统中国草药学，通过千年不间断的探索研究于实践，了解到大量被大自然封存的秘密，可惜大多不被西方了解，或者被淡忘。
Florêve Paris has created a new holistic beauty that acts both from within the body and on the surface of the skin for a more effective and lasting action.

Plantamed AB

7.2A02-004~007

Address: 瑞典 Sweden Sodemanland-Eskilstuna-Slätviken 635 09
Tel: 15957355520
Email: wangying@plantamed.cn
Web: www.plantamed.se

Plantamed was founded in 1979. It produces natural remedies and body care products. The founder of the Plantamed Dr. Raimo has developed more than 40 nature products based on his clinical experience for nearly 50 years. He founded Verte Nature brand, all products of this brand are pure natural extraction. The company has developed the market in Nordic and set up subsidiary in Shanghai in 2018.

Factors Group of Nutritional Companies

7.2A02-008

Address: 加拿大 Canada BC-1550 united Blvd Coquitlam, BC, V3K, 6Y2 Canada
Tel: 0512-66610003
Email: jason.lin@pn-china.com
Web:

我公司充分整合国内外权威营养健康研究机构资源，聚焦“大健康”领域，为客户提供健康产品，遗传疾病筛查及免疫疗法等健康管理服务。产品及服务覆盖营养健康食品、个人护理、基因检测、活力养老、个人健康管理服务等领域。
Our company fully integrates the resources of authoritative nutrition and health research institutions at home and abroad, focuses on the field of "big health", and provides customers with health products, genetic disease screening and immunotherapy and other health management services. The products and services cover nutrition and health food, personal care, genetic testing, vitality and pension.

Blooms The Chemist Management Services Pty Ltd

7.2A02-009

Address: 澳大利亚 Australia NSW-Kalingba-Level3, 304-318, Kingsway Road
Tel: +61042809664
Email: info@bloomsthechemist.cn
Web: www.bloomsthechemist.hk

Our Blooms The Chemist team is proud to be a truly community-minded network of Pharmacies, providing the highest level of professional health service and advice to you and your family。

株式会社 TAANE / TAANE Co. Ltd.

7.2A03-001

Address: 日本 宮城县-仙台市-宮城野区中野 5-7-15 Japan Miyagi-Sendai-5-7-15 Nakano, Miyagino-ku
Tel: 09064549734 / +81-22-388-8278
Email: hashiba@taane.co.jp
Web: http://taane.co.jp https://taane.co.jp

我们是食用氢(H2，H-)抗氧化健康食品「今日水素」的生产商。在此次展会上展示「今日水素」最新研究成果以及系列产品。
We, TAANE Co. Ltd., are the manufacture of H2 (H-) antioxidant dietary supplement "Today's Hydrogen". In this show, we exhibit our new research and study using Today's Hydrogen.

Australia Synapses Pty Ltd

7.2A03-002

Address: 澳大利亚 Australia VIC-Melbourne -Suite 39 Level 3 257 Collins Street
Tel: 021-64278223
Email: micurae@163.com
Web: www.micurae.com

MICURAE is medical consulting company delivering boutique healthcare services to our clients. Our team consists of international reputable and experienced clinicians. MICURAE provides highly professional and personalised medical information services to all clients. MICURAE also provides international services for hospitals and doctors. By partnering with world famous physicians and hospitals.

Phytologic Holdings Pty Ltd

7.2A03-003

Address: 澳大利亚 Australia 1-7 Doody Street Alexandria NSW 2015 Australia
Tel: 18522141073
Email: m13352071871@163.com
Web: www.phytologic.com.au

Phytologic公司总部位于澳大利亚悉尼，始终专注于健康及抗氧化领域产品。
Phytologic公司的核心产品——anthogenol月光宝盒，于1947年起源于法国，创始人是原花青素的发现者，法国科学家Jack Masquelier教授。
Phytologic是澳洲唯一拥有MASQUELIER's Original OPCs专利技术授权的公司。
Phytologic is 100% Australian owned and our products are manufactured in Sydney, Australia. We are also in the rather unique position of having a TGA licensed manufacturing facility on our premises. Our hero product – Anthogenol is a well-known antioxidant supplement that is superior to other grapeseed extract products.

HCP / HCP Gmbh

7.2A03-004

Address: 德国 Niedersachsen-Hanover -Krepenstr.8a Hanover Niedersachsen 30165 Germany Germany Niedersachsen-Hanover-Krepenstr.8a Hanover Niedersachsen 30165
Tel: 18613318927 / 15010268034
Email: skye.le@deumed.com service@hcp-online.com
Web: http://www.deumed.com.cn/ www.hcp-online.com

HCP Gmbh(简称HCP）成立于1997年，旗下拥有多家实体药房，主营非处方药品、健康营养品，母婴用品，药妆护肤品，家居用品等，与欧洲上百家知名品牌直接合作，拥有法兰克福最大的保健品和药妆批发中心。
HCP GmbH was founded in Hannover in 1997 by experienced pharmacist Mr. Wulf-Dieter Freude. Over more than 20 years, HCP GmbH has been engaged in developing of import & export business with foreign countries especially Asian countries such as China, India, Vietnam in the field of nutritional supplements, cosmetics, household and baby articles with currently more than 4000 SKUs.

美国蔻菲 / Quatrefoil skincare LLC

7.2A04-002

Address: 美国 威斯康星-麦迪逊-6417 欧丹娜路，24房间 United States of America Wisconsin-Madison-6417 ondana rd
Tel: 021-39812230
Email: xmjjhappy@163.com
Web: https://qskin.com

Quatrefoil Skincare LLC是一家位于美国威斯康星州麦迪逊市的有机护肤品公司。我们是美国中西部地区第一家护肤公司，并采用当地人参农场原料，致力于开发天然和有机护肤产品。
Quatrefoil Skincare LLC is a Wisconsin organic skincare company based in Madison, Wisconsin. We are the FIRST skincare company from the Midwest focusing on developing natural and organic skincare products with ingredients from local farms.

PHARSMART SRL

7.2A04-005

Address: 意大利 米兰省-米兰市-CORSO VITTORIO EMANUELE II, 30 Italy MILAN-MILAN-CORSO VITTORIO EMANUELE II, 30
Tel: +393892662009
Email: hui@pharsmart.com
Web: www.pharsmart.com

Pharsmart位于国际化大都市意大利米兰，地理位置优越，是一家充满活力的智能大健康公司。自成立以来，积极拓展在欧洲乃至全世界的合作渠道，寻找优质的合作伙伴，通过精良的产品和卓越的服务改善各个年龄阶段不同人群的健康状况，提升全球用户生活品质。在药品、化妆品、保健食品、医疗器械的探索、开发和生产过程中，Pharsmart与同领域科学家、企业共同探寻，并与各地专业人士、政府和社。
In the exploration, development and production of health foods and medical devices, Pharsmart works with professionals, governments and communities from Europe and the world, to create sophisticated products and enhance health at all ages. Leading in the development of intelligent health, it provides better quality services and widely recognized health-beauty products.

Homart Group Pty Ltd

7.2A05-002

Address: 澳大利亚 Australia NSW-Rydalmere -59 Kirby St
Tel: 0421 972 859
Email: sales9@homart.com.au
Web: www.homart.com.au

1992年成立的澳洲活曼特药业集团Homart Group拥有cGMP药厂，专业生产澳洲高品质健康食品、护肤品和奶粉。旗下产品如SpringLeaf绿芙冻龄胶囊、儿童鱼油，TopLife皇特维康羊胎素、葡萄籽精华，GrandPawpaw万用木瓜膏，AUTILI澳特力乳铁蛋白粉及Cheri萱兹医美玻尿酸羊胎素精华液等，是2010年上海世博会澳洲国家馆健康食品独家代表，荣获16项国际大奖。
Established in Australia in 1992, Homart specialises in manufacturing and marketing high quality Australian health supplements. We differ from other contract manufacturers by providing "Speed with Quality". Our fast turnaround time is evident from the initial product enquiry, right through to manufacturing and delivery.

美国西洋参参农协会 / GINSENG GROWERS ASSOCIATION OF AMERICA, INC.

7.2A04-003

Address: 美国 威斯康辛州-莫西尼市-开辟者路931号 United States of America WI-Mosinee -931 Ancestor Ln.
Tel: （+1）715-972-3189
Email: info@ginsengamerica.org
Web: https://www.ginsengamerica.org

美国人参种植者协会(GGAA)是一个代表美国威斯康星州人参种植者的非盈利组织。该组织是为了西洋参种植者和消费者的利益而成立的。GGAA致力于确保只有来自种植者的高品质人参才能进入全球消费者的手中。
The Ginseng Growers Association of America (GGAA) is a non-profit organization that represents ginseng growers in the United States. The organization was founded in the interest of growers and consumers of American ginseng. The GGAA strives to ensure that only the highest quality ginseng from growers reaches consumers worldwide.

艾兰得 / aland (HK) Nutrition Holding Limited

7.2A04-006

Address: 香港地区 HongKong China Hong Kong-Hong Kong-Room 2103, Tung Chiu Commercial Center 193 Lockhart Road Wan Chai
Tel: 17701838424
Email: miaxiao@alandgroup.com
Web: www.alandgroup.com

艾兰得（香港）营养控股有限公司，是一家集营养保健品、OTC业务于一体的跨国公司。艾兰得打通全球营养品生产、研发、销售全产业链，横跨亚、美、欧建立10个生产基地和3个国际研发中心，全球员工超过4000人。艾兰得构建全球销售网络，影响力遍布全球80多个国家。公司旗下有艾兰得、艾兰得威、Bloem、BioCare等10多个国内外品牌。2014到2018年，艾兰得连续五年位居中国医药保健品进出口商会发布的“中国保健品企业出口10强”榜首。
aland (HK) Nutrition Holding Limited is a multi-national company providing nutrition & wellness, OTC service and products. aland established 10 modern manufacturing sites and 3 international R&D centers in Asia, North America and Europe, and forms a global sales network influencing over 80 countries and regions. aland has over 10 brands worldwide, including aland, alandv, Bloem, BioCare, etc.

Vitaco Health (NZ)Limited

7.2A05-003(001)

Address: 新西兰 New Zealand Auckland-Auckland-Corner Kordel Place &Accent Drive East Tamaki
Tel: 13567679896
Email: 13567679896@163.com
Web: http://www.vitaconz.cn

Vitaco Health Ltd began as a company in 2007 as a merger of two Australasian health & wellness companies:Nutra-Life Health & Fitness and Healtheries of New Zealand.We have built a reputation for world-class manufacturing and knowledge based on 45 years of industry experience and knowledge.

禾宝蓝 / Herbaland Naturals Inc.

7.2A04-004

Address: 加拿大 Canada BC-Richmond-13330 Maycrest Way
Tel: 6042845050
Email: connie@herbaland.ca
Web:

Herbaland专注于制造天然营养软糖，拥有加拿大卫生署颁发的200多项天然保健食品认证和美国农业部的有机认证。其产品符合GMP标准，成分明确、含量保证、安全保障。由加拿大卫生部天然非处方健康产品管理委员会监管品质。Herbaland禾宝蓝的使命是生产有趣且功能性强的营养软糖。致力于采用优质的原料，尽量减少生产对地球的影响，以及改善社区的生活。Herbaland为儿童和成人提供全系列营养软糖在全球30多个国家地区热销。
Established in 2009, Herbaland began by manufacturing gummy vitamin products for both children and adults. Today, we are Canada's largest nutritional gummy manufacturer and the number 1 brand of Canadian-made gummy vitamins, exporting products worldwide to over 30 countries and regions. At Herbaland, our mission is to make great gummy products that are both fun and functional.

HOII Australia Pty Ltd

7.2A05-001

Address: 澳大利亚 Australia 59 kirby st, rydalmere, NSW2116
Tel: 0451988889 / 451988889
Email: michelle.lin@apollo-ipl.com.tw
Web: www.hoii.com.tw

「HOII后益」是專利對抗紫外線的時裝品牌，我們運用獨家的專利技術，保有太陽的有益光，以光學美膚為出發點，讓衣料配件化身成「光的保養品」。同時，我們也打破大家對機能織品的刻板印象，將時尚元素與科技醫療緊密結合，讓保養不再受限，成為一種時尚風格。自品牌上線以來，不僅受到不同領域的專家青睞，也成為名人及女星們必備的保養兼穿搭單品，行銷據點遍佈全球。
HOII is a fashion brand of anti-UV ray apparels. Our unique and patented “Beneficial Lights converting” technology converts and preserves beneficial light spectra from the sunlight. Clothing and accessories made from our unique material are transformed into skin care products. Through combining fashion ideas and medical science technology, we revolutionise

Douglas Pharmaceuticals Ltd

7.2A05-003(002)

Address: 新西兰 New Zealand Auckland- 2 Te Pai Pl, Henderson
Tel: +64 9 822 5468
Email: CarlosZ@douglas.co.nz
Web: https://www.douglas.co.nz

Douglas Pharmaceuticals is a New Zealand success story – a rapidly expanding pharmaceutical company with a reputation for high manufacturing standards, quality products and outstanding client service.

禾宝蓝 / Herbaland Naturals Inc.

7.2A05-003(003)

Address: 新西兰 New Zealand Auckland-4D Pacific Rise, Mt. Wellington
Tel: +6499306688
Email: jwu@meoair.com
Web: www.meoair.com

新西兰健康呼吸有限公司生产研发创新型防雾霾口罩，旨意在保护人们免受有害空气污染的伤害。健康呼吸采用先进的过滤系统与时尚美观的设计相结合，创造出适合时尚都市的功能性口罩。口罩的设计理念是将高效性、实用性、时尚感完美融合。
Healthy Breath Limited is the manufacture of anti-pollution face mask from New Zealand, made to protect people from harmful air pollution. HBL has combined a technologically advanced filtration system with beautiful designs to create functional face masks suitable for fashion-conscious urban dwellers. The design of the face mask brings together effectiveness, practicality and fashion.

The Best Souvenirs 2017 Company Ltd

7.2A05-003(006)

Address: 新西兰 New Zealand Auckland-Mt Eden-330 Dominion Rd
Tel: +64 9 2745222
Email: accounts@thebestsouvenirs.co.nz
Web: www.baisheng.co.nz

The Best Souvenirs was established in 2001. It was the first Chinese company with shops spread in New Zealand specialized in selling products related to tourism, healthcare products and other NZ signature products. We also have own branded Health King nutraceutical products and other New Zealand signature products.

BIOPHYSICS AUSTRALIA PTY LTD

7.2A05-004

Address: 澳大利亚 Australia NSW-MASCOT-LEVEL 2, 189 O'RIORDAN STREET
Tel: +61 02 91254212
Email: sabrina.m@biophysicsgroup.com
Web: biophysics australia pty ltd https://www.biophysicsgroup.com

Biophysics was founded in 2014, with a vision to develop and market brands enriching people's lives, and to bring Australian owned destination beauty, health and wellness brands to Australian and New Zealand grocery and pharmacy stores, and the broader Chinese e-commerce and Daigou shopper channels.

Good Health Products Ltd

7.2A05-003(004)

Address: 新西兰 New Zealand Auckland-Albany-265 Albany Highway
Tel:
Email: lenaxu@zs-united.net
Web: https://www.goodhealth.co.nz

Good Health understands how the power of nature can boost your body's natural immunity and support systems, enhancing your health and vitality. You can trust us to provide well researched natural health solutions, using the best of ingredients, scientifically proven, subjected to extensive testing and manufactured under extremely strict conditions.

ALPINE DEER NZ LP

7.2A05-003(007)

Address: 新西兰 丰盛湾-陶朗加-642号帕亚斯帕路 New Zealand Bay of plenty-Tauranga-642 Pyes Pa Rd
Tel: +64 7 543 3417
Email: cecilia@deer.co.nz
Web: https://cervidor.com

Alpine Deer is founded in 1964 by Sir Tim Wallis, he pioneered live deer capture from helicopters, led to a significant industry in New Zealand. He is a leader and international representative of the deer farming industry. Now Alpine deer is the largest Deer co-product manufacturer and exporter in New Zealand and occupy all points in the supply chain. Cervidor is a brand owned by Alpine Deer.

美国美宝生命科技有限公司 / MEBO Life Science, Inc.

7.2A05-005

Address: 美国 加利福尼亚-California-325 N Puente St #A Brea CA 92821 USA United States of America California-California-325 N Puente St #A Brea CA 92821 USA
Tel: 010-50800236 / 010-58700236
Email: yuesh@mebo.com
Web: https://www.mebolifeusa.com

MEBO Life Science Inc. is a division of MEBO International Group, which was established in 1987 and is an international leader in the field of regenerative supplements. Our primary mission is to help people regain and maintain optimal health and well-being by innovating and producing quality products in the exciting and promising field of regenerative medicine.

MitoQ

7.2A05-003(005)

Address: 新西兰 奥克兰-14 Viaduct Harbour Ave, New Zealand Auckland-14 Viaduct Harbour Ave,
Tel: 006493798222
Email: ayang@mitoq.com
Web: https://www.mitoq.com/ http://www.officialmitoq.cn

MitoQ是位于新西兰的生物科技公司，致力于向全世界的消费者介绍新西兰国宝级专利的生物科学成果—线粒体靶向抗氧化科技。MitoQ能减缓线粒体氧化应激损伤，有效支持器官功能，改善长期健康水平。作为勇于探索的科学先驱，MitoQ的使命是研发一系列有助线粒体功能保持的科技，助您达到最佳健康水平，无惧衰老，尽情享受人生。
MitoQ Ltd is a wholly owned subsidiary of Antipodean Pharmaceuticals Inc, a biotechnology company that holds worldwide patents to a class of mitochondiria-targetd antioxidants. MitoQ Ltd is tasked with commercialising the lead compound- Mitoquinol Mesylate. Mitoquinol Mesylate has the benefit of over a decade and 60 million USD of research resulting in over 200 published research papers investigat.

AFC Group Holdings Limite

7.2A05-003(008)

Address: 新西兰 New Zealand Auckland-Auckland-1/245 Ti Rakau Drive, Burswood
Tel: 0064212448000
Email: howard.long@afcnz.com
Web: www.afcnz.com

AFC GROUP HOLDINGS LIMITED (AFC) is a listed company on the New Zealand Stock Exchange (NZX), stock code: AFC. The company is headquartered in Auckland. It is a diversified group specialising in food research and development, manufacturing, marketing and cross-border trade.

Caruso's Natural Health

7.2A05-006

Address: 澳大利亚 Australia NSW-Eastern Creek-14 Shale Place
Tel: +61 2 8818 0122
Email: amber@carusoshealth.com.au
Web: www.carusosnaturalhealth.com.au

Caruso's Natural Health is a proud Australian owned family company, founded by Frank Caruso in 1982.
Frank Caruso is very passionate about natural health as well as educating Australians about prevention of disease by embracing the principles of natural living.
Our current range includes more than 120 products and is still growing.
Over 95% of Caruso's products are manufactured in Australia.

株式会社中纺恒远 / 株式会社エターナル中紡

7.2A06-001(001)

Address: 日本 大阪府-大阪市-中央区久太郎町3-6-8 4楼 Japan Osaka-Osaka-4F, MIDOSUJI DAIWA BLDG.,, 6-8, KYUTAROMACHI 3-CHOME, CHUO-KU,
Tel: (+81)06-4704-0560
Email: yuanjian@chinatex-eternal.co.jp
Web: www.chinatex-eternal.co.jp
chinatex eternal co.,ltd.

株式会社中纺恒远系大阪法务局批准，于2002年1月在日本工商管理机构注册登记。本公司母公司为中纺国际服装有限公司，最终控制方为中粮集团有限公司的全资子公司。本公司属贸易行业，主要业务为对日本的成衣进出口、面辅料进出口、其他服饰杂货进出口，以及对中国的机械，电器，化妆品，保健食品，日用杂货的出口，另外还有面向日本国内的电商销售业务。

Our company belonging to international foreign trade corporation, the main business of China Textile Hengyuan is to import and export garments, clothing accessories, miscellaneous goods to Japan and export machinery, electrical appliances, cosmetics, healthy food, miscellaneous goods to China, as well. In addition, it also deals with Japanese domestic e-commerce sales business.

Suehiro Sangyo Co.,Ltd

7.2A06-001(004)

Address: 日本 Japan Kaizu8 Tomisaka Shinshiro-city Aichi-ken
Tel: 0536-23-8808
Email: nagashino2-info@suehiro-i.com
Web:

Suehiro Sangyo Co. Ltd. is a general trading company with 70 years of history.We have developed our business in 10 business facilities, which include the construction division, real estate division, restaurant, medical health and beauty division and golf courses.In the exhibition China International Import Expo, we aspire to let people know our business related to medical,health and beauty.

里井株式会社 / URAI.CO.,LTD

7.2A06-001(007)

Address: 日本 `京都府-京都市-498鶏鉾町下京区 Japan Kyoto-kyoto-498 niwatorihokocho shimogyouku
Tel: +81 75 361 0331
Email: t_kida@urai.co.jp
Web: http://www.urai.co.jp

本公司始创于1951年，是一家主营日本传统服饰-和服以及珠宝、皮草等女性高端产品的贸易公司。近年来，公司秉持“美丽源自健康”理念，着重开拓健康产品、美容仪器市场，并取得了不菲的销售业绩。公司在日本拥有一批富裕阶层的顾客。因此，我们将一如既往致力于新商品的开发和企划，为顾客提供更好的商品，共创品质生活。

We start the business in 1951 and Japanese KIMONO clothes, pearl, jewel, leather and Far's are trading firm of a female high-end product. My company made "creation of beauty" an idea for these several years, and a healthy product was opening up a beauty new market and was expanding achievement mainly. We'll also put emphasis on product development.

株式会社 岛津制作所 / SHIMADZU CORPORATION

7.2A06-001(002)

Address: 日本 京都-京都-1 Nishinokyo Kuwabara-cho, Nakagyo-ku, Kyoto 604-8511, Japan Japan Kyoto-Kyoto-1 Nishinokyo Kuwabara-cho, Nakagyo-ku, Kyoto 604-8511, Japan
Tel: 021-3419-3661
Email: t_iwata@shimadzu.co.jp
Web: https://www.shimadzu.com

岛津制作所创业于1875年，是一家具有一百多年历史的，从事医疗影像设备、分析检验设备研究、开发、生产的专业性公司。岛津企业管理（中国）有限公司是（株）岛津制作所于1999年100%出资，在中国设立的现地法人公司，在中国全境拥有13个分公司。其下设有北京、上海、广州、沈阳、成都、武汉分析中心，并拥有覆盖全国的销售代理商网络以及60多个技术服务站，已构建起为广大用户提供良好服务的完整体系。

Shimadzu Corporation was established in 1875, based in Kyoto, Japan, manufacturing medical systems, analatical and measuring instruments etc. Shimadzu (China) Co., LTD. is contribution by Shimadzu Corporation in 1999 with 100%, which is legal representative of the company and has 13 branches in China.

B&S Corporation Co.,Ltd.

7.2A06-001(005)

Address: 日本 Japan Tokyo-Tokyo-4-1-28 Kudankita, Chiyodaku, Tokyo 102-0073
Tel: 81-3-3288-0065
Email: a-oh@bandscorp.jp
Web: b&s corporation co.,ltd.

我司创办于1914年的乳酸菌产品为主业的参加。主要产品为不含活菌的乳酸菌代谢物和死菌为主成分的保健食品。通过专利技术而制造的独一无二的产品。

This company was the first to produce and sell yogurt in Japan in 1914.

Since then, it has continued to accumulate research, and in 1982, successfully developed Lactic Acid Bacterial Extract "Chitsu", the optimal supplement to grow intestinal Lactic Acid Bacteria.

KURUN CO.,LTD

7.2A06-001(008)

Address: 日本 大阪府-大阪市-港区波除5-10-8 Japan Osaka-Osaka-shi-5-10-8 Namiyoke Minato-ku
Tel: +81-6-6584-3234
Email: sales@kurun.co.jp
Web: https://kurun.co.jp

公司在大阪创立于2010年。

我们正在制造旋转牙齿护理刷。它可以用于牙菌斑去除和牙龈按摩。它也适用于舌刷！我们做一个日本的质量的健齿刷和服务。

Our company founded in Osaka in 2010.

We are manufacturing the rotary tooth care brush. Its can used for both dental plaque removal and gum massage. Its usable for tongue brush also! We make a Japanese quality tooth care brush and service.

Yawata Corporation

7.2A06-001(003)

Address: 日本 Japan Tottori-Yonago-498-2 Nihongi
Tel: 81-859-37-1122
Email: sakamoto@yawata.tv
Web: http://www.yawata.tv

We are very particular about all of our ingredients and make sure they are all natural. The important thing is not just the origin of the ingredients but what kind of nutrients those ingredients have and how safe and secure they are.

TANOTECH株式会社 / TANOTECH Co.,Ltd.

7.2A06-001(006)

Address: 日本 宮の前1 ー 4パーレン平塚ビル5F-平塚市-神奈川県 Japan Miyanomae1-4Palen Hiratsuka Building 5F-Hiratsuka-Kanagawa
Tel: 81-463-73-5490
Email: yin@tanotech.jp
Web: www.tanotech.jp

TANOTECH株式会社是多年来致力于开发适合老年人及残障人士康复运动训练系统的公司，为把TANO产品走向国际化，通过TANO产品把教育和福祉事业连接起来，2018年6月正式注册。TANO采用最新高科技手段,吸取医疗护理教育机构的建议，并与世界各地的机构、大学合作，目前TANO产品已经在日本150多家养老机构,在位于韩国、中国大陆、台湾地区、香港地区等100家养老中心进行销售。

TANOTECH Co., Ltd. is a company that has been developing a rehabilitation training system for the elderly and the disabled . In order to internationalize TANO products, we will connect education and welfare business with TANO products. In TANO uses the latest high-tech means to draw on the advice of medical care institutions and cooperates with institutions and universities around the world.

HELMET潜水株式会社 / HELMET DIVE CO.,LTD.

7.2A06-001(010)

Address: 日本 大分県-国東市-1300 瀬戸田, 安岐町, Japan Oita,-Kunisaki City,-1300 Sedota, Aki Town,
Tel: 0978672251
Email: helmet-m.yano@cloz.co.jp
Web: https://www.cloz.co.jp

我公司创立于1982年，只用潜水服素材作为材料生产独一无二的个性商品。柔软热水宝以及医疗护理用产品由我公司工匠们一针一针用心加工的手工日本产品。材料也全部是日本产的。制造对地球环境保护和人类身体健康的优秀的产品。

We are a company that produces discerning and unique products using wet suit materials, founded in Japan, 1982. Our original medical care products including soft hot water bottles are carefully handmade one by one by craftsmen at our factory, and all materials are made in Japan. We produce products that are friendly to both the global environment and the human body.

Healthcare Systems Co.,Ltd

7.2A06-001(011)

Address: 日本 Japan Aichi-Nagoya-city-2-22-8 Chikusa, Chikusa-ku
Tel: 03-6809-2722
Email: soumu@hc-sys.jp
Web: https://hc-sys.com

株式会社Healthcare Systems是来自名古屋大学的科技创新企业，被日本内阁府采纳为战略性创新科学程序事业，在疾病风险和预防等未病领域开发确立了独有的亚健康检查技术，为生活习惯和亚健康状态科学定性以正确改善生活习惯，提升生活品质。被日本全国800多家医疗机构和2500多家药局及众多体检中心采用，地方政府为了减少医疗支出也大量使用我们的服务。

Healthcare Systems is a technology innovation company from Nagoya University. We have developed unique inspection technologies for preventive healthcare. Our service has been adopted by more than 800 medical institutions and more than 2,500 pharmacies throughout Japan. Local governments also use our services extensively to reduce medical expenses.

株式会社 丹水 / Tansui Co., Ltd.

7.2A06-001(014)

Address: 日本 外日角ハ105-1-かほく市-石川県 Japan Sotohisumi Ha 105-1-Kahoku-shi-Ishikawa-ken
Tel: 81+72+2830186
Email: tansuiya06@gmail.com
Web: http//tansui8.co.jp

我公司是一家主营日常大消费类（ 食品，护肤品 工业品 以及工程机械液压配件等）进出口综合贸易商，拥有自己的研发团队和生产基地，除一般进出口贸易外，还为各界商界朋友提供跨地域的合资经营，合资生产，OEM生产，商务考察和技术贸易服务。

Our company is a comprehensive import and export trader of daily large-scale consumer goods (food, skin care products and engineering machinery hydraulic parts, etc.), with its own research and development team and production base, in addition to general import and export trade, but also for the business community Friends provide cross-regional joint ventures, joint venture production, OEM produc.

桑派克有限公司 / Sunpac Co. Ltd

7.2A06-001(018)

Address: 日本 大阪府-吹田市-江坂町1-17-14江坂吉川大楼4层 Japan Osaka-Suita-shi-4F Esakayoshikawa BLDG. 1-17-14 Esaka-cho
Tel: +81663695681
Email: xia@sunpac.co.jp
Web: https://sunpac.co.jp

桑派克有限公司位于大阪府吹田市成立于1971年，致力于健康产品的研发于生产40余年。建立伊始便以“不落窠臼，创新第一”为原则、多项产品取得日本设计专利，并荣获多项设计大奖。桑派克的产品以关注人体健康为中心，足部按摩，身体按摩等多项产品深受日本消费者的喜爱。“七龙珠”身体按摩仪在中国市场人气颇高。

Sunpac established in Osaka in 1971 , focusing on products of health and beauty. We always put creativity and innovation in first place. Since that, our products got patents and won a bunch of awards in Japan. Our body massage and food massage products are popular in Japan and own high reviews from customers. Also, our body massage product "Dragon Ball" are famous in China.

株式会社健康事业资讯 / Health Business Info. Co., Ltd.

7.2A06-001(012)

Address: 日本 東京都港区海岸2-2-6 DS海岸ビル10f Japan 10F, DS Kaigan BLDG., 2-2-6, Kaigan, Minato-ku, Tokyo, Japan
Tel: 03-6435-3538
Email: li@health-biz.info
Web: http://www.health-biz.info/index.html

The company inherits the wisdom of the Chinese medicine and combines the advanced technology of Japan to develop safe and effective high-quality products, bringing the highest level of enjoyment and experience for people pursuing beauty and health.

Jointly developed by Japan's major medical universities, all products are produced and packaged in the GMP International Certification Factory in Japan.

Tsukuba Technology Co., Ltd / Tsukuba Technology Co.,Ltd

7.2A06-001(016)

Address: 日本 茨城県 -つくば市-千現1-14-11 Japan Ibaraki ken-Tsukuba city -1-14-11,Sengen
Tel: +81-29-852-7777
Email: zhangbo@tsukubatech.co.jp
Web: www.tsukubatech.co.jp

日本筑波科技株式会社成立于2005年7月，位于世界著名的高科技学园都市-筑波市。它是日本国立产业技术综合研究所旗下的一家高科技股份公司。公司具有世界一流的无损检测技术，并成功研发出世界首创的【激光超声波可视化检测仪】与全球最小型【冷阴极X射线检测仪】，其系列产品已服务于航空航天、核电、石油管道、压力容器、汽车、船舶等广泛领域，已被世界500强企业，世界顶尖大学以及国家研究机构所使用。

Tsukuba Technology Co. Ltd in the Japanese science and academic city Tsukuba is a high-tech startup originated from National Institute of Advanced Industrial Science and Technology (AIST). The company holds the top technology in nondestructive inspection field, and successfully developed the world's first "Laser Ultrasonic Visualizing Inspector", and "Compact X-ray Inspection System" .

INOAC CORPORATION

7.2A06-001(019)

Address: 日本 Japan Aichi-Nagoya-2-13-4 Meieki Minami, Nakamura-ku
Tel: 050-3135-9951
Email: pr-living@inoac.co.jp
Web: https://www.inoac.co.jp/en

Development of functional materials based on polyurethane, rubber, plastics and composites, and manufacture of products utilizing these materials contributing to a variety of fields closely related to a daily life such as automotive, two-wheeled vehicles, information technology equipment, housing and construction materials, and consumer products.

日本太比雅株式会社 / TEPIA Corporation Japan Co.,Ltd.

7.2A06-001(013)

Address: 日本 东京都-东京市-港区虎之门4-3-1城山TRUST TOWER 31F Japan tokyo-tokyo city-31F Shiroyama Trust Tower, 4-3-1, Toranomon,Minato-ku,
Tel: 81-3-6721-5505 / +81-3-6721-5505
Email: liuyan@tepia.co.jp
Web:

日本太比雅株式会社是一家日本的复合型商贸公司，我司独家代理了日本原装进口INS红品PEACEOFSHINE系列护肤产品。该系列产品均为完全无添加的自然系护肤品，研发人员均来之原雅诗兰黛集团的主要研发团队，产品适用人群包括敏感肌体质的孕妇以及产后恢复·哺乳期的女性。该系列产品秉承品质第一，安全，安心的匠心理念，在日本市场复购率高达80%以上，是日本INS上引人瞩目的新进护肤品之一。

TEPIA corporation is Asia's leading consulting company providing various trade services and analytical 、intelligent solutions for cross-border and technology-related business expansions.

Satte Spring Co.,Ltd.

7.2A06-001(017)

Address: 日本 Japan IBARAKI PREFECTURE 306-0214-740, KOYA, KOGA-CITY
Tel: 13372157881
Email: maoxilin2012@sina.com
Web: https://ssp-co.jp

Our main product is a mild deodorant called: SteriNa. Our original intention was: Save the safety for people.

奥绩技研有限公司 / OG Wellness Technologies Co., Ltd.

7.2A06-001(020)

Address: 日本 冈山县-冈山市-中区海吉1835-7 Japan OKAYAMA-OKAYAMA-1835-7, Miyoshi, Naka-ku,
Tel: +81-86-277-7181
Email: yang-meng@og-giken.co.jp
Web: https://www.og-wellness.com/cn/index.html

OG Wellness创立于1949年,是一家提供医疗、护理、运动疗法器械之开发、生产、销售及售后服务的企业。作为设备生产及销售企业,我们将业务重心放在“物理疗法器械” “运动疗法器械”及“入浴护理设备”上，并结合关联企业的“物流、仓储领域”及“建筑、设计领域”,以“创造健康的企业”为目标,为地方社会贡献，提出创新的解决方案。

OG Wellness provides development, manufacturing, sales and after-service of medical devices,long-term care equipment and bathing systems.

Combining our core manufacturing and sales operations for physiotherapy, rehabilitation and bathing devices with our logistics and warehouse business, as well as architectural and design services.

财团法人横滨企业经营支援财团 / Yokohama Industrial Development Corporation

7.2A06-001(021)

Address: 日本 横浜市-日本神奈川県 Japan 7F, Yokohama Media Business Center
Tel: 81-45-225-3730 / +81(0)45-225-3700
Email: global@idec.or.jp
Web: https://www.idec.or.jp/index.php www.idec.or.jp

公益财团法人 横滨企业经营支援财团(IDEC)以促进横滨市经济为目的，致力于在稳固强化企业经营基础、解决经营困难、促进自主创业和开展海外业务等方面为市内中小企业提供有力支援。
IDEC (Yokohama Industrial Development Corporation) supports small and medium-sized Yokohama enterprises in stabilising and strengthening their business base, offers solutions for managerial issues,promotes the launch of businesses and the development of overseas business, all with the objective of contributing to the vitality of Yokohama's economy. Please see the PDFbrochure for details.

MedVigilance株式会社 / MedVigilance Inc.

7.2A06-001(024)

Address: 日本 神奈川县-横滨市-神奈川県 横浜市西区みなとみらい4-4-2 12F Japan Kanagawa-Yokohama-12F, Minatomirai4-4-2, Nishi-Ku
Tel: 0081-090-4163-6184
Email: info@medvigilance.com li_x@medvigilance.com
Web: https://www.medvigilance.com

MedVigilance is a vital/sports sensor developing company located in Yokohama, Japan. From the year of 2016, we have been delivering healthcare IoT product and digital service to insurance company and fitness gym in Japan.
Service case: 1. At fitness industry, Konami Co Ltd. The big game and fitness company, is using our sEMG sensor PULSTONE to empower their fitness lesson, and spread their gym ser.

大阪工业局 / OSAKA BUSINESS DEVELOPMENT AGENCY

7.2A06-001(027)

Address: 日本 大阪府-大阪市-中央区本町橋2-5 Japan osaka-osaka-2-5, honmachibashi, chuo-ku
Tel: 86-66947-4088
Email: sugiharam@mydome.jp
Web: https://www.mydome.jp

我们的目标是，以加强大阪中小企业的运营能力、开展创业扶持诸类工作，谋求对府内中小企业完整的创造及培养,致力于发展更富有活力的大阪经济。同时也致力于对府内企业海外发展的扶持，尤其是在中国，(我们) 1985年在上海设立了大阪府上海事务所，与当地政府及相关部门共同合作，为府内企业的中国发展提供各项服务。
Our mission is to serve for industrial promotion in Osaka prefecture to contribute to the sound growth and development of SMEs as well as other local industries, thereby form a robust economic region, improve the livelihood of those local residents and expand welfare services.

TAOS研究所 / TAOS Institute Inc.

7.2A06-001(022)

Address: 日本 Yokohama-横浜市-横浜市港北区新横浜2-2-15 801号 Japan Yokohama-Kohoku-ku-Paleana Bldg 8F, Shin yokohama 2-2-15
Tel: +81456207647
Email: miao@itaos.org
Web: www.itaos.org

TAOS研究所专注非线性CHAOS技术研究，是日本国横滨市政府重点扶植的科技创新企业。拥有多项技术发明专利，开发了诸多早期健康预警及预知心血管疾病的仪器。通过采集生命体征信息，实现睡眠分析、大健康数据分析、疾病筛查以及远程智能监控。
为养老机构、健康管理中心、专业人群提供基于数据云的“疾病筛查,提早预警”的完整技术解决方案。
The mission of our company is to provide innovative technologies which can be applied into daily life and industries by introducing the state-of-the-art chaotic systems; thus we can contribute to people's health and happiness. We provide software and hardware based on the technologies of Chaos/ Complex Systems with our abundant experimental data and analysis techniques.

UNIQS Corporation

7.2A06-001(025)

Address: 日本 kanagawa-yokohama-神奈川県横浜市中区不老町一丁目2番地1 Japan kanagawa-yokohama-横浜市中区不老町1-2-1
Tel: 81-45-228-9370
Email: k.fukuda@uniqs.co.jp
Web: http://www.uniqs.co.jp/ www.uniqs.co.jp

UNIQS是一家研发风险公司，旨在开发和商业化细胞外基质。我们公司拥有生产人造胶原蛋白的专利。人造胶原蛋白是仅使用氨基酸制造的高度安全的化妆品成分。由于没有导致过敏的抗原位点，即使皮肤较弱的人也可以安心使用它。在日本，中国和美国注册为化妆品成分。除化妆品外，我们还将推广用作药物成分。
UNIQS is a research and development venture company that aims to develop and commercialize extracellular matrix. Our company has patents for manufacturing artificial collagen. Artificial collagen is a highly safe cosmetic ingredient manufactured using only amino acids. Since there is no antigenic site that causes allergies, even those with weak skin can use it with peace of mind. Registered as a c.

株式会社Rion商事 / Rion Trading Co Ltd

7.2A06-001(028)

Address: 日本 大阪-吹田市-丰津町11-34-201D Japan Osaka-suita city-201D, Dai 10 Maida Bldg, 11-34 Toyotsu Cho
Tel: +81661554628
Email: i-yang@rion-corp.com
Web: www.rion-corp.com

公司主要经营保健食品，美容健康产品的生产销售和进出口业务。公司旗下有母婴保健品牌lili&Kiki，以及健之日品牌，多年出口香港地区，新加坡，韩国以及东南亚。在大型药妆连锁以及高端个人护理专卖店有销售。我们也欢迎OEM，ODM等多方面合作。 We have more than 6 years history in health supplement and beauty care in Japan with our own brand "Lili&KiKi" for mama& baby care, "shokusai kazoku" "kennohi" for health and beauty. We exported to Asia and South East Asia. Most of our products are selling at drugstore chain, premium personal care shop etc. We also accept OEM，ODM.

Think-Lands Co., Ltd

7.2A06-001(023)

Address: 日本 神奈川-横滨市-横滨市鹤见区小野町75-1, LVP1-502 Japan Kanagawa-Yokohama-shi-75-1 Ono-cho, Tsurumi-ku, Yokohama-shi, Kanagawa
Tel: +8145-633-4082
Email: miyaji-k@think-lands.com
Web: https://think-lands.co.jp/index_english.html

Think-Lands Co., Ltd驱使卓越的光学及电气技术，制造及销售世界最先进的医疗器械和检测器械。特别值得一提的是成功开发了利用“光涡”这一特殊光学技术的开发制造技术后，正在力争实现Hollow Micro Needle。针对医疗领域的应用，实现了所有药剂的经皮注入，目标在医疗用药领域欣起革新浪潮；在美容应用领域，正在推进抗衰老美容革新产品的开发。
Think-Lands Co., Ltd. are now developing Hollow Micro Needle (HMN) using a specific laser fabrication technology.
This HMN provides two features; painless and harmless. Target application are "insulin injector" with a new HMN cap and “intradermal medication; such as patch type medicine which is the most promising candidate.

技术力科技有限公司 / Liquid Design Systems,INC

7.2A06-001(026)

Address: 日本 神奈川县-横滨市-港北区新横滨2-3-4 Japan Kanagawa-Ken-Yokohama-shi, -2-3-4 Crescendo building 7th floor Koho-ku
Tel: +81 45-620-0703
Email: info@liquiddesign.co.jp
Web: https://liquiddesign.co.jp

技术力科技有限公司是一家凭借自身的技术，开发创新产品的高科技公司。
1989年，再次设计并物联网化了从索尼生命情报研究所诞生的Vital传感器。并且开发了和iPhone健康管理软件联动的物联网呼吸传感器(专利)、Baby Ai和护理Log监测传感器已经商业化。
Liquid Design Systems is a high-tech company that develops innovative products with its own technology. In 1989, the Vital sensor from the Sony Life Intelligence Institute was redesigned and IoT. The IoT Respiratory Sensor (patent), Baby Ai and Care Log Monitoring system, which are linked to the iPhone Health Management Software, have been commercialized.

YOSHIMARU CO.,LTD

7.2A06-001(029)

Address: 日本 Japan OSAKA-SUITA-SATSUKIGAOKA(N)!$='
Tel: 06-6875-8718
Email: yoshikawa@e-yoshimaru.co.jp
Web: yoshimaru,osakazine,net

medicai care goods
glove stocking for medical

有限会社Wonder Fulbeauty / Wonder Fulbeauty

7.2A06-001(030)

Address: 日本 大阪府-大阪市-天王寺区上汐3-3-23-904 Japan Osakafu-Osaka-#904, 3-3-23, Ueshio, Tennojiku
Tel: 81-66777-9799
Email: info@wonder-fulbeauty.com eng@wonder-fulbeauty.com
Web: https://wonder-fulbeauty.com/ https://wonder-fulbeauty.com/english

Wonder Fulbeauty致力于“由外在的美丽至内在的治愈”为理念开展事业。创始人经过10年努力，自行研发出解决各类肌肤问题的极致护肤系列。对{无添加}这一变化受到一致好评并热销至今，甚至获得美容达人的认可。我们采用经过严选的奢华美容成分，对肌肤锁水保湿&透明白皙
※注：过敏肌、敏感肌也能放心使用
Wonder Fulbeauty's Products make people who is suffered from skin troubles smile.
We are recruiting Sales Distributors, Sales staffs and Sales partners to make more people smile. Many customers love to use Puririn fundamental gel all over the world to lift up their skin by applying it.

ATLAS Co.,LTD

7.2A06-001(033)

Address: 日本 Japan Osaka-Osaka city-1-6, 3-Chome, Nishitemma, Kita-ku
Tel: +81-6-4709-7244
Email: takemura@atlas-ltd.co.jp
Web: http://www.atlas-ltd.co.jp

我们从1992年开始，进军了美容行业及健康相关商品的事业，主要销售渠道是批发，零售，网络销售等方式，把商品送到客户手中 。
我们所销售的商品是本公司独立开发的和按照市场的要求采购的商品进行有机的组合。我们不仅在日本市场进行销售，近年，正在拓展中国市场以及东南亚的市场，今后我们的方针是更好的把日本商品推广到海外。
We mainly deal with beauty and health products since 1992.
Our distributions are so many and large because of using whole seller , retailer and ourselves. Then we are able to take products which we developed and other company suppled. So, we can look market in several viewpoint, we catch and supply the products which are so popular and able to sell well.

日本公益财团法人福冈县中小企业振兴中心 / The Fukuoka Center for the Promotion of Small and Medium Enterprises, Japan

7.2A06-001(036)

Address: 日本 日本福冈 Japan fukuoka Japan
Tel: 021-6385-5580
Email: yamashitak8959@gmail.com
Web:

福冈县内中小企业的支持。
Give Support to small and medium-sized Enterprises in fukuoka Prefecture.

一般财团法人 大阪国际经济振兴中心 / Osaka International Business Promotion Center

7.2A06-001(031)

Address: 日本 大阪府-大阪市-大阪市住之江区南港北1-5-102 Japan Osaka-Osaka City-1-5-102, Nanko-Kita, Suminoe-ku, Osaka 559-0034
Tel: +81-6-6615-5522
Email: chen@ibpcosaka.or.jp
Web: https://www.ibpcosaka.or.jp/ https://www.ibpcosaka.or.jp/en

大阪国际经济振兴中心是运营和管理西日本最大的会展中心INTEX大阪的财团法人。IBPC大阪是大阪国际经济振兴中心的国际部，是执行大阪市政府促进大阪市和亚洲，世界各地的城市间的经济和贸易往来的经济团体。 IBPC (International Business Promotion Center) Osaka is an organization established by Osaka City in April 2003 to strengthening Osaka's trade, industry and communication activities with Asia and other cities around the world, as an International Affairs Division of Osaka International Business Promotion Center, the organization that operates West Japan largest exhibition hall "INTEX Osaka".

株式会社TOPLINE / TOPLINE CORP.

7.2A06-001(034)

Address: 日本 大阪府-大阪市-大阪府大阪市淀川区宫原5-1-28-8F Japan Osaka Prefecture-Osaka City-5-1-28-8F, Miyahara, Yodogawa-ku, Osaka Japan
Tel: +81-6-6335-7528
Email: yuka-mori@bisekai.com
Web: http://www.topline2008.com/ http://topline2008.com/menu/rinen-e.html

Since its estabilshment,TOPLINE CORP.'s corporate philosophy has been to"contribute widely to society through producets made from improved and natural ingredients." We are continuing to respond to environmental issues that have only progressed in the 21 st century,and are pursuing the limitless possibilities that are demanded in the bio-industry.

Piso Comodo co.,ltd

7.2A06-001(037)

Address: 日本 FUKUOKA -MIZUMA-GUN-1052 MIYAMATSU OHKI-MACHI Japan FUKUOKA -KEN-MIZUMA-GUN-1052 MIYAMATSU OHKI-MACHI
Tel: +81944758611
Email: senju@piso-comoo.co.jp
Web: https://www.piso-comodo.co.jp

Since its founding in 2000, we have been working on traditional Japanese-style interiors such as TATAMI, FUSUMA, and SHOJI.
We have been engaging in selling and interior decorating of tatami, fusuma and shoji since we were found in 2000.Though development of 20 years, we have grown to top market share-holder in Japan and expanding our business both domestic and overseas.

株式会社毛发诊疗励发21 / Hair Clinic Reve-21 Co.Ltd.

7.2A06-001(032)

Address: 日本 大阪府-大阪市中央区-22F MID Tower21, 2-1-61 Shiromi, Chuo-ku, Osaka, JAPAN ZIP540-6122 Japan Osaka Prefecture-Osaka City-22F MID Tower21, 2-1-61 Shiromi, Chuo-ku,
Tel: +81647942480
Email: nishijima_t@reve21.co.jp
Web: https://www.reve21.co.jp

励发21是一家专注于促进自己头发生长的生发行业先锋企业。
在日本拥有18万个会员，其中97%都在生发方面获得了实实在在的效果。
它能够从根本上解决潜藏在头皮以及比头皮更深处的导致头发稀疏、脱发的原因，以此促进生发。
自信，源于看得见的生发效果。
Reve 21 is a company pioneering in hair growth services in growing one’s own hair.
With 180,000 members in Japan, achieved a hair growth rate of 97%.
By removing the root cause of hair thinning and loss that lies deeper than the scalp, achieved success in hair growth.
We have pride in the overwhelmingly world's number one hair growth effect.

日本前田实业有限公司 / japan maeda business co.,ltd

7.2A06-001(035)

Address: 日本 爱知县-名古屋-日本名古屋市中区丸の内3-7-9 Japan nagoya maronouti3-7-9 japan
Tel: 021-33531880 / 86-21-33531880
Email: 15601804523@163.com
Web:

从事健康和美容等领域的产品进出口业务。
Our company is a trading company, which is engaged in import and export technology and products.

Guardner株式会社 / Guardner Co.,Ltd.

7.2A06-001(038)

Address: 日本 福岡県-福岡市-東区舞松原2-10-7-402 Japan Fukuoka-Higashi-ku-2-10-7-402, Maimatsubara
Tel: 092-518-9600
Email: m-yamashita@guardner.jp
Web: https://guardner.jp

will create "Fun Happy Pleasant" with our original products which have never existed in the world. In order to fulfill our slogan of "Fun Happy Pleasant", GUARDER is focusing on the fields of elderly care industry with our "RoomShampoo" How we wish to help people who has difficulty to maintain their hair conditions. We are contributing to the improvement of quality of our customer’s

Japan Beauty Labo co.,Ltd.

7.2A06-001(039)

Address: 日本 Japan Fukuoka-Fukuoka-shi-3th floor JRJP Hakata Building, 8-1Hakataeki Chuogai, hakataku
Tel: +81-947-32-9060
Email: m_kameda@yamagoya.co.jp
Web: www.japan-beautylabo.jp

sales and intermediacy, internel mall order business and import / export on bealth food, quasi-drug,supplement, hygiene product, beauty equipment, health equipment, cosmetics and products relating to beauty

Gsport, inc.

7.2A06-001(043)

Address: 日本 Japan Tokyo-Tokyo-5F Ochanomizu plaza buiiding, 1-3-11, Yushima, Bunkyo-ku, 113-0034
Tel: +81-3-5615-8268
Email: deligne@gsport.co.jp
Web: https://www.gsport.co.jp/index_e.html

株式会社GSPORT是一家采用图像分析和传感技术，专门从事运动和身体识别的IT公司。
我们的业务主要集中在：
1.面向于医疗和健康等相关领域，开发与销售相关传感器系统
2.面向于医院、诊所、健身房和研发机构等，开发和销售运动和姿势测量设备
Gsport is an IT company specialized into movement and body recognition by image analysis and sensing technology.
Our main business focus on:
1.Development and sales of sensor systems in the medical and health related fields.
2.Development and sales of movement and posture measurement equipment for hospitals, clinics, gyms, and laboratories.

VENEX CO.,Ltd.

7.2A06-001(046)

Address: 日本 KANAGAWA KEN -神奈川县-神奈川县厚木市中町4-4-13浅岗大厦4F Japan KANAGAWA KEN -ATSUGI SHI NAKACHO -4nd Floor,Asaoka Building,4-4-13
Tel: 13501368451
Email: qianwenjing@venex.com.cn
Web: www.venex-j.co.jp

VENEX休养专用功能衣是一款运用了日本株式会社VENEX自主开发的最新科技手段的服装，由日本开发、日本设计、日本制造。
它是一款将以纳米白金为主的10多种矿物质合成的高性能原材料（PHT）捻入到每一根的纤维中缝制而成的休养时专用的服装。这些纳米矿物质可以刺激人体副交感神经的活跃，可以改善血液循环、放松肌肉、促进深睡眠，能够使穿着的人获得更加优质的休养。2013年，在德国ISPO上荣获金奖。
Venex Recovery wear is the only recovery wear that is used during rest. It is a revolutionary sports gear that enables athletes to enhance their performance by overcoming fatigue. It is made with special fiber through state-of-the-art technology. Venex fiber is specially treated to aid the parasympathetic nervous system at night, by relaxing the blood vessels and increasing blood flow.

株式会社五大陆 / Gotairiku Co.,Ltd.

7.2A06-001(041)

Address: 日本 大阪市-大阪市-西区靭本町 1-7-25 Japan Osaka-Osaka-1-7-25 Utsubohommachi,Nishi-ku
Tel: +81-6-6467-8623
Email: cheng.fang@gotairiku-net.com
Web:

五大陆公司成立于2008年3月，是大阪府日中友好协会资深会员，日中经济贸易中心会员。励志于日中友好桥梁，把日本最先进的医疗技术，精密体检带给中国需要的人群。
Founded in March 2008, the Five Continents Company is a senior member of Osaka Prefecture Japan-China Friendship Association and a member of Japan-China Economic and Trade Center. Encourage Japan-China Friendship Bridge to bring Japan's most advanced medical technology and precise physical examination to the people in need in China.

HATA Inc.Co.,Ltd.

7.2A06-001(044)

Address: 日本 Japan Akitashi-Akitaken-6-13-2-1402Nakadori
Tel: +81-18-832-7777
Email: carbonicnano@yahoo.co.jp
Web: http://www.hatamixer.jp

Our proprietary gas-liquid mixing system developed a carbonated spring generator with a bubble system of less than 100 nanometers. It can be adjusted according to the application and the conditions of use in a small, compact stainless steel tubular device.

裕塔卡制造有限公司 / Yutaka Make Co., Ltd.

7.2A06-001(047)

Address: 日本 大阪-岸和田-三田195 Japan Osaka-kishiwada-195mita
Tel: 81 724412220
Email: k-yoshihama@yutakamake.co.jp
Web: www.yutakamake.co.jp

我们在日本生产各种产品。
在这次展览中，我们展出了3种不同的保健产品。所以请到我们的展台看看，并试一下。
We are Manufacturer of various products located in Osaka Japan. In this Exhibition, we exhibit 3 different types of product related in Human health care. So please visit our booth to see and try them to confirm with your keen inspiration.

株式会社AYA控股 / AYA HOLDINGS INC

7.2A06-001(042)

Address: 日本 埼玉县-埼玉市-北区吉野町 2-281-5 Japan saitama-saitama-shi-2-281-5, yoshino-cho,kita-ku
Tel: 048-662-5522 / +81-48-662-5522
Email: yang_lin@aya-g.co.jp
Web: www.aya-g.co.jp

2003年3月设立于日本埼玉，事业内容包括跨境医疗（面向中国人），跨境电商,中日企业间的合作咨询，养老机构经营管理指导，护理人材教育及人材介绍。
Established in Saitama, Japan in March 2003, the company's business includes cross-border medical care (for Chinese), cross-border e-commerce, cooperation between Chinese and Japanese companies, management guidance for nursing homes, nursing staff education and talent introduction.

IWASHOUORIMONO Co.,Ltd.

7.2A06-001(045)

Address: 日本 Japan AICHI-NAGOYA-MEIEKI-5 16-17
Tel: +81 525831155
Email: iwashou@asipita.com
Web: https://www.ashipita.com/china https://www.asipita.com/en

一家公司成立于1954年，60年前。一个古老的主要产品是日本传统服装“KIMONO”和日本传统鞋类“WARAJI，GETA”。现在“ASHIPITA”是健康和美容的新主要产品。人类的发展是为了激发日本传统艺术工艺的背景，这是多年来建立起来的。
A company established in 1954,60years ago. A old major product is KIMONO that is a Japanese traditional wear and WARAJI, GETA that is a traditional Japanese footwear. Now ASHIPITA is a new major product for health and beauty of human being was developed to inspire the context of a Japanese traditional art craft was built up in many years.

株式会社阿通普郎 / Artplan Co., Ltd.

7.2A06-001(048)

Address: 日本 滋賀県-彦根市-川瀬馬場町 750-7 Japan Shiga Ken-Hikone Shi-750-7, Kawasebabacho
Tel: +81-749-25-5600
Email: watanabe@artplan.ne.jp
Web: http://www.artplan.ne.jp

1.自动化设备
2.福祉机器开发制造销售
1.Manufacturer of automation equipment.
2.Manufacturer of welfare apparatus.

株式会社阿普莱兹 / UPRISE CO.,LTD

7.2A06-001(049)

Address: 日本 大阪府-大阪市-東淀川区東中島 1-18-22 Japan OSAKAFU-OSAKASHI-HIGASHIYODOGAWAKU HIGASHINAKAJIMA 1-18-22
Tel: 81-06-6195-6316
Email: taira@uprise-corp.com
Web: www.uprise-corp.com

株式会社阿普莱兹隶属已有41年的历史的利昌集团，致力于环保产业和健康产业两大领域。健康产业主要联合日本京都大学针对“矿物质在人体很难被吸收”的难题深入研究：使用100%纯天然原料，采用最新纳米技术，研发生产了“明视纳米矿物质”营养辅助食品连续取得2项日本专利,目前明视产品”已畅销于日本药妆美容界，并成为日本部分医院的推介产品。同时利昌集团与小林制药，田村药品等日本多家制药公司有着悠久的战略合作关系。
UPRISE CO.,LTD is a subsidiary of Japan's RISHO GROUP and is devoted to two major areas:the environmental protection industry and the health industry.The health industry is mainly in conjunction with Kyoto University in Japan,using 100% pure natural raw materials, using the latest nanotechnology, research and development produced "Mingshi Nano Minerals" nutrition supplement.

郡是株式会社 / GUNZE LIMITED

7.2A06-001（052）

Address: 日本 大阪-大阪- 北区梅田二条五门25号 大阪商业层楼22楼 Japan Osaka-Osaka-HERBIS OSAKA OFFICE TOWER, 5-25 Umeda 2-chome, Kita-ku
Tel: 06-6348-1333
Email: shinji.nonaka@gunze.co.jp
Web: http://www.gunze.co.jp

郡是集团是创立于1896年在京都。为了实现“舒服”，我们正在各方面努力提高人们的“生活质量(QOL)”，通过为客户提供“优质的产品和良好的服务”以及“有助于提高人们的产品和服务”来为社会做出贡献。
Gunze was founded in Kyoto in 1896. Our aim is to provide customers with a "Feeling of Comfort" and contribute to the improvement of people's quality of life through our products and services.

奥佳华 / OGAWA Healthcare International（HK）Limited

7.2A06-002

Address: 香港地区 HongKong China 31/F, YHC Tower, 1 Sheung Yuet Road, Kowloon Bay, Kowloon
Tel: 18650861523
Email: robinson.chen@ogawa.com.cn
Web:

OGAWA，1996年在马来西亚创立，2008年启动大规模的全球拓展，并在马来西亚、新加坡、中国等20多个国家展开跨国经营，目前在全球已经拥有800多家门市专柜。我们通过不断研发崭新、高端的产品、提供高素质的销售及售后服务，藉以满足顾客不同的需求，提供不一样的生活体验。
OGAWA ,A member of OGAWA Group (Stock code: 002614),which was established since 1996 in Malaysia. Up to now, OGAWA has more than 800 outlets around 20 countries and regions in Asia & Pacific area. In the future, through sustainable brand upgrading,OGAWA will grow into a leading healthcare brand in Asia

王子食品株式会社 / OJI FOODS INC.

7.2A06-001(050)

Address: 日本 京都府-京都市-右京区西京極堤町39番地 Japan Kyoto-Kyoto-shi-39 Tsutsumi-cho, Nishikyogoku, Ukyo-ku,
Tel: +81-6-6449-8851
Email: yangwenye@ojifood.co.jp yamamoto@ojifood.co.jp
Web: http://ojifood.co.jp/zh/ http://ojifood.co.jp/en

健康食品…·化妆品OEM·ODM、进出口业务协助公司设立至今，为客户企画开发超过1100种以上商品。以丰富的技术经验和特有的情报网络全力协助贵公司的产品制造。
We provide the world most safe and reliable OEM, ODM product from JAPAN.
We acquired international standard ISO22000 (Food Security Management System) & ISO9001(Quality Management System).
Results of over 1,100 products since our establishment(1969).
With our best effort, we support totally to make your product by utilizing our experience and knowledge and also information network.

SPLENDEUR Co,.Ltd.

7.2A06-001（053）

Address: 日本 Japan FUKUI-AWARA-CITY-OMIZO1-16-6
Tel: ＋81-776-97-6650
Email: masayuki.shimizu@splendeur.jp
Web: http://www.splendeur.jp

Planning,manufacturing and sale of clothing, health foods,beauty products.
Exports of major affiliated companies's products.
Overseas transactions.

DJM Medical Instrument GmbH

7.2A06-003

Address: 德国 Germany Halske Str.21, 47877 Willich, Germany
Tel: (0755) 8653 3609
Email: market@djmiot.com
Web: http://www.djmiot.com

DJM于2016年12月，在德国杜塞尔多夫成立。
DJM的优势：1）德国工艺4.0顶尖技术模块化制造；2）万物物联；3）远程操控；4）云端储存大数据平台，汇集全球超过100万的案例；5）远程诊断，整体解决方案；6）软硬件一体化工业设计标准；7）整合全球资源：制造业放在德国；软件、AI人工智能、物联网放在中国深圳；部分运算方法放在美国硅谷。8）具备全球整合的灵感思维：结合德国工业4.0，帮助DJM更好的成为全世界最优秀的竞争企业。
DJM Medical Instrument GmbH was founded in Germany in 2016. Our head office, including administration, factory and storehouse, is located in Willich, North Rhine-Westphalia, close to Düsseldorf.
We are a company who has the current trend of automation and data exchange in manufacturing technologies in Germany! Industry 4.0 includes cyber physical systems, the internet of things, cloud computing.

FUMAKILLA LIMITED

7.2A06-001(051)

Address: 日本 Japan Tokyo-Chiyoda-Ku-11, Kanda Mikura-Cho
Tel: +81-3-3252-8561
Email: foreign1@fumakilla.co.jp
Web: https://www.fumakilla.co.jp

Manufacture and sales of pesticide, disinfectant, herbicide and other agricultural products. FUMAKILLA LIMITED has been delivering safety and comfort to the world through a wide variety of products, including insecticides, since its foundation in 1890.

公益财团法人茨城县国际交流协会 / IBARAKI INTERNATIONAL ASSOCIATION

7.2A06-001（054）

Address: 日本 茨城县-水户市-千波町後川745 县民文化中心分馆2楼 Japan IBARAKI-MITO-IBARAKI PREFECTURAL CULTURE CENTER ANNEX 2ND FLOOR, 745 USHIROKAWA, SENBA-CHO
Tel: 021-62753338
Email: taki@ibaraki.org.cn
Web: http://www.ia-ibaraki.or.jp

在介绍茨城县当地企业的产品和技术的同时，拓宽在中国的市场。
IBARAKI INTERNATIONAL ASSOCIATION introduces products and technologies of companies in Ibaraki Prefecture, and opens up new market and expands existing market in China.

奥索 / OSSUR HF

7.2A06-004

Address: 冰岛 雷克雅未克-雷克雅未克-Grjóthálsi 1-3, 110 Iceland Reykjavík-Reykjavík-Grjóthálsi 1-3, 110
Tel: 021-61271726
Email: tichen@ossur.com
Web: https://www.ossur.is/ https://www.ossur.com

奥索是一家全球性的假肢矫形器材公司。我们致力于提供假肢和矫形器的产品与服务，以及仿生学技术在这一领域的应用。
奥索拥有25个战略业务处，3000名员工。它在美洲、欧洲以及亚洲拥有广泛的业务，并在其他地区设有代理商。
Founded in 1971, Össur has wide-ranging expertise in the development, production, and sale of prosthetics and non-invasive orthopedics. After its first listing on the Iceland Stock Exchange in 1999, the Company expanded rapidly through a series of strategic acquisitions. Significant ongoing investment in research and innovation has also been central to its growth. A global leader in the field.

勝記倉(集團)有限公司 / SHING KEE GODOWN (HOLDINGS) LIMITED

7.2A06-005

Address: 香港地区 香港新界葵涌第3號貨櫃碼頭亞洲貨櫃物流中心A座7樓 7003-7004(W)室 Hong Kong RMS 7003W-7004W 7/F ATL LOGISTICS CTR A BERTH 3 KWAI CHUNG CONTAINER TERMINAL KWAI CHUNG NT
Tel: 15013762555 / 03165750266
Email: shingkee@shengjicang.com
Web:

SHING KEE GODOWN (HOLDINGS) LIMITED that originated in HongKong Kwai Chung container terminal 3 in 1973. With the Forty years of growing and developing the group has become specialized international transport of import and export, international trade service, as well as became multinational enterprises of invest international marketing, which is business global within more than 60 countries.

Sheng DE fen international co., LTD. (Taiwan)

7.2A06-005(001)

Address: 台湾地区 Taiwan China No.13, lane 136, zhuangjing road, dongdong district, tainan city, Taiwan
Tel: 01061256910
Email: 15911039768@163.com
Web:

Sandalphon is a research and development team composed of Taiwanese scientists, mechanical and electrical doctors, Chinese doctors, sleep quality experts, psychological consultants and nurse practitioner. It is willing to accompany people's growth and health with frequency technology chips, nourish and assist people's physical and mental development.

株式会社ステンレスプラント

7.2A06-005(002)

Address: 日本 Japan Saitama Yasaka 512-2
Tel: 010-61256910
Email: 3160747850@qq.com
Web:

Shihuishesitelisipulangte is a company established on March 23, 1977. The company's registered address is located in various swimming pools including various school swimming pools based on stainless steel swimming pools and swimming pools for spa rehabilitation. Other welfare, development, manufacture and trafficking of rehabilitation products.

THUASNE

7.2A06-005(003)

Address: 法国 France 118/120, rue Marius Aufan BP 243FR-92307 LEVALLOIS-PERRET
Tel: 010-61256910
Email: 15911039768@163.com
Web:

Founded in 1847, leader of European medical devices. French number one protective gear brand, health insurance coverage brand, European medical device industry leader. Sophisticated knitting techniques and top medical concepts. From a variety of superb industrial technology, comprehensive product series to tailor-made, provide optimal treatment solutions.

Sankyo Airtech Co., Ltd.

7.2A06-005(004)

Address: 日本 Japan 2-5-6 Shibata, Kita-ku, Osaka, Japan
Tel: 01061256910
Email: Ma19920709@sina.com
Web:

Established in 1993, the company is mainly engaged in the research and development, manufacturing, sales, maintenance and repair of professional equipment such as deodorization, sterilization, air purification and air humidification. Major customers: hospitals, nursing homes, kindergartens, hotels, apartments, factories, offices, etc

NDC株式会社

7.2A06-005(005)

Address: 日本 日本千叶县习志野市 Japan Chiba Prefecture, Japan
Tel: 010-61258804
Email: 3583448@qq.com
Web:

In 1962, NDC Corporation was founded and has a history of 57 years. The Company capital: 1.575 billion yen (equivalent to 100 million RMB), output value: 10 billion yen (equivalent to 635 million yuan). It mainly produces and manufactures automotive parts. The company is headquartered in Chiba Prefecture, Japan. There are two manufacturing factories at japan.

BoCo corporation (Japan)

7.2A06-005(006)

Address: 日本 Japan 6F, 2-11-7 new building, yizuoju, Tokyo
Tel: 010-61258804
Email: 15911039768@163.com
Web: www.bococn.com

BoCo corporation (Japan). Is a professional bone conduction technology (ipads conduction) audio equipment manufacturers. Through the development, production and sales of bone conduction products to bring you a new style of hearing without plugging your ears.

NAKA CORPORATION

7.2A06-005(007)

Address: 日本 Japan 2-18-10 3F, Higashino, Taito-ku, Tokyo
Tel: 01061256910
Email: Ma19920709@sina.com
Web:

NAKA corporation has established more than 80 years of history and is Japan's leading supplier of building materials. The design and manufacture of the product combines world-class advanced technology, retaining the inspiration and concept of Japanese culture and art.

Sangetsu Corporation

7.2A06-005(008)

Address: 日本 Japan 1-4-1, Habashita, Nishi-ku, Nagoya-city, 451-8575 Japan
Tel: 01061256910
Email: Ma19920709@sina.com
Web:

Sangetsu was founded in 1849 and is a representative wholesaler of interior goods in Japan. Production of original design wallpapers, textiles, flooring and other related products, sales to residential, large commercial real estate interior design, designer offices, interior decoration stores, building materials companies, the company was established in April 1953 (started in Japan Yongjia years)

大建工业株式会社 / 大建工業株式会社

7.2A06-005(009)

Address: 日本 大阪市北区堂岛第一条街6号 门牌20号 Japan No.20, 6 Fandi, Tangdao 1st Street, North District, Osaka City
Tel: 010-61256910
Email: 15911039768@163.com
Web:

The company was founded in September 1945. At that time, it was in the waste and chaos after the war, and we began to produce "wood and wood processing products that are used as revival materials." Moreover, shouldering the responsibility of rebuilding Japanese society and expressing our passion for the nation, we began to manufacture various wood products and flooring materials.

E.M.S. Electro Medical Systems Trading Co., Ltd.

7.2A06-005(010)

Address: 瑞士 Switzerland Ch. de la Vuarpillière 31
Tel: 010-61256910
Email: 3160747850@qq.com
Web:

EMS is the leading manufacturer of precision medical devices for dental prophylaxis, orthopaedics and urology.
With this philosophy, we are continuing a more than 200-year-old tradition of the Swiss Vallée de Joux. This is where EMS was founded – as well as numerous other brands, which are known around the world for their precision down to the smallest detail.

Sissel GmbH

7.2A06-005(011)

Address: 台湾地区 Taiwan China Bruchstrasse 48, D-67098 Bad Durkheim, Germany
Tel: 010-61256910
Email: 15911039768@163.com
Web:

SISSEL® is a leading manufacturer of health care solutions in Europe. We have more than 500,000 loyal consumers, including therapists, medical experts, professionals, and thousands of consumers. More than two-thirds of these products come from the European Union(mainly produced in Sweden and Germany). In addition, many products are registered and CE certified medical devices.

Datsun Biomedical (UK) Limited.

7.2A06-005(012)

Address: 韩国 ROK(Republic of Korea) BIC, Wearfield, Enterprise Park East, Sunderland, SR5 2TA, UK
Tel: 01061256910
Email: 3160747850@qq.com
Web:

Established in 2007, Datsun Biomedical is an innovative manufacturer of quality medical instruments markets throughout the world.
Main product area:
Pulse Wave Velocity Measurement System
Digital Chronoamperemetric Analyzer
Multi channel ECG
Heart Rate Meters
Phototherapeutic Medical Devices

StraTek Co.,Ltd

7.2A06-005(013)

Address: 韩国 ROK(Republic of Korea) #705,#706,#722-#724, Yu cheon Factopia, 30, Jeonpa-ro, Manan-gu, Anyang-si, Gyeonggi-do, Korea
Tel: 01061256910
Email: 3160747850@qq.com
Web:

StraTek.Co.,Ltd. Is a high-tech research and development company in Korea engaged in research and development and manufacturing of medical equipment and IT digital products. StraTtek has more than 2,000 employees and a research and development team of up to 400 people. StraTek currently has four world-renowned product lines

SELVAS HEAL THCARE,INC.

7.2A06-005(014)

Address: 韩国 ROK(Republic of Korea) 29, Gongdan4-ro, Jillyang-eup, Gyeongsan-si, Gyeongsanbuk-do, Korea
Tel: 01061256910
Email: 3160747850@qq.com
Web:

ACCUNIQ, SELVAS Healthcare's brand specialized in medical equipments, and HIMS the brand specialized in information communication assistive equipments continue innovating themselves with advanced technical skills and products where their competence in hardware development is combined with affiliates' software and AI data processing technologies.

FITNESS SYSTEMS,LLC

7.2A06-005(015)

Address: 美国 United States of America Core Fitness,LLC 709 Powerhouse RD Independence,VA 24348 USA
Tel: 010-61258804
Email: 3160747850@qq.com
Web:

FITNESS SYSTEMS, LLC provides products and programming to serve the clinical needs of caregivers across the entire rehabilitation spectrum. In addition to traditional active rehabilitation modalities, we have designed programs to assist clinicians with fall screening, concussion management, orthopedic rehabilitation, bone health, pain control, circulatory challenges and mental decline.

Audio Rhoon

7.2A06-005(016)

Address: 荷兰 Netherlands Marskramer17, 3161ND Rhoon, Netherlands
Tel: 010-61258804
Email: 3160747850@qq.com
Web:

Audio Rhoon provides the worldwide sales of the Magic Flute, The Magic Switch, the Quintet and the GroovTube.Assistive Technology Devices for respiratory therapy, speech therapy, music therapy, occupational therapy and physiotherapy. New: GroovTube, breathing exerciser for the iPad. The GroovTube is the ultimate device to teach breath control and oral motor skills for all ages.

Dawang paper co. LTD

7.2A06-005(017)

Address: 日本 Japan Lidabashi Grand Bloom building, no. 10 no. 2, fujimoto, chiyoda district, Tokyo, Japan
Tel: 010-61256910
Email: 15911039768@163.com
Web:

Japan Dawang Paper Co., Ltd. is a comprehensive paper company in Japan. Since its establishment in 1943, it has been engaged in the production and sales of paper and paper processing products. It has now become the third largest company in Japan and the 22nd largest company in the world.
In order to strengthen contacts with Chinese domestic customers, the Shanghai office was established in Shangha

株式会社EINS / EINS.Ltd

7.2A06-005(018)

Address: 日本 Japan Japan's Osaka City, Nakhon Ratchasima
Tel: 01061256910
Email: 2915882345@qq.com
Web:

company name is EINS CO.,LTD, in 2006,the company that is Establishment the product of bed type Nano Mist Bath needs no water supply / drainage or electric supply work. You can start using right away.
Nano Mist Bath was born from a reversal idea that the person will not go to the bath but instead bringing the bath next to the person.

東リ株式会社 / TOLI Corporation

7.2A06-005(019)

Address: 日本 东有冈5丁目125番地-伊丹市-日本兵库县 Japan East of Idan City, Hyogo Prefecture, there are 125 sites of Okada 5, Dingmu
Tel: 010-6152 8804
Email: maweiy@sicynfz.com
1280070630@qq.com
Web:

In 1919, TOLI Company, as Japan's first flax coil manufacturer, started its business in Idan, Hyogo Prefecture. Later, TOLI Company began to manufacture curtains, wallpaper and many other products, thus becoming an interior decoration material manufacturer.

PLATZ SHANGHAI CO.,LTD / PLATZ CO.,LTD

7.2A06-005(020)

Address: 日本 Japan 2-3-17, Nakahata, Onojyo-City, Fukuoka, Japan
Tel: 01061256910
Email: import181@163.com
906306155@qq.com
Web:

Platz, Co., Ltd., Inaugural Day; On July 3, 1992, registered capital; 582.05 million yen, business content; The production and sale of electric nursing beds and bed-related appliances, and the sales market; Medical devices, welfare goods sales companies, furniture sales shops, to join the organization;

Longxirou industry co. LTD

7.2A06-005(021)

Address: 日本 Japan Green 4-15-3, murata district, Tokyo
Tel: 01061256910
Email: 15911039768@163.com
Web:

LONSEAL was founded in September 1928 with a registered capital of 5 billion yen (about 350 million won) and domestic sales of 21.2 billion yen (about 1.484 billion won) in 2001. TOSOH was 427.5 billion yen. LONSEAL Company is one of the well-known manufacturers of plastic flooring materials in Japan, focusing on the development, production and sales of plastic products.

Filtration Technologies International, Inc.

7.2A06-005(022)

Address: 美国 United States of America 105 Shenandoah Street, Clarksville, TN37043
Tel: 010-61258804
Email: 3583448@qq.com
Web: www.ameiriscreens.com

Filtration Technologies International (FTI), established in 2014, is dedicated to developing advanced filtration and separation solutions for a clean and sustainable world. With a broad network in global textiles, nonwovens, filtration and separation technologies, we offer the most cost-effective services and the most advanc

Austin Mecent Limited

7.2A06-005(023)

Address: 美国 United States of America 8835 53 AVE ELMHURST, NY 11373
Tel: 010-61258804
Email: 3160747850@qq.com
Web:

Austin is the world's leading professional air purifier manufacturer and the first to combine HEPA high efficiency filters with activated carbon for indoor air purifiers. After more than 30 years of development, the company has always maintained a leading position in the field of air purification.

InBody CO.,LTD.

7.2A06-005(024)

Address: 韩国 ROK(Republic of Korea) InBody Bldg., 54, Nonhyeon-ro 2-gil, Gangnam-gu, Seoul 06313 KOREA
Tel: 010-61258804
Email: 3160747850@qq.com
Web:

InBody is the global leader in the body composition analysis industry with world class technological advancements.The information from the InBody test allows for personalized exercise and diet programs to maintain healthy lifestyles. The InBody is widely used in various research and professional fields.

SEALTECH CO. LTD

7.2A06-005(025)

Address: 韩国 ROK(Republic of Korea) 51-13, Myobong-ro 173beon-gil, Idong-myeon, Cheoin-gu, Yongin-si, Gyeonggi-do, Korea
Tel: 18516870487
Email: 471455646@qq.com
Web:

Seal Tech was established in 1983 and started to manufacture O-rings. In 2006, we established medical equipment business. We are expanding its capacity in the field of pressure ulcer preventive cushion manufacturing and are making efforts for growth in the domestic market and overseas export business.

FineSky GmbH

7.2A06-005(026)

Address: 德国 Germany Wendenstraße 195，20537 Hamburg, Germany
Tel: 010-61258804
Email: 3160747850@qq.com
Web:

FineSky is a well-known brand of health appliances in Germany. It is a comprehensive brand company integrating product development, design, sales and operation. The company is positioned in health appliances and is committed to improving the quality of human life. Its products are based on leading-edge expertise and its brand footprint is spread all over the world.

Hermann Bock GmbH

7.2A06-005(027)

Address: 德国 Germany Nickelstreet12-33415Verl-Germany
Tel: 010-61258804
Email: 562277294@qq.com
Web:

Seit 100 Jahren ist die Hermann Bock GmbH ein führender Entwickler und Hersteller von Pflegebetten und Möbeln für Seniorenheime, Rehabilitations-Einrichtungen und für die häusliche Pflege.
Mit jeder Innovation sorgen wir mit unseren Pflegebetten für mehr Lebensqualität durch gesteigertes Wohlbefinden.

Enraf-Nonius.BV

7.2A06-005(028)

Address: 荷兰 Netherlands The Netherlands 3047 AT Rotterdam Vareseweg 127
Tel: 010-61258804
Email: 3160747850@qq.com
Web:

Enraf-Nonius helps people enjoy their life. For more than 90 years we provide medical products and projects which help people improve their health and quality of life. We care for people. We are Enraf-Nonius, your partner for life. Enraf-Nonius is market leader in the world of physiotherapy and rehabilitation.

CyberMedic Co., Ltd

7.2A06-005(029)

Address: 韩国 ROK(Republic of Korea) #203 Standard Factory, 20-23, Yakchon Ro 8-gil, Iksan-si, Jeollabuk-do, 570-979
Tel: 010-61258804
Email: 3160747850@qq.com
Web:

Cybermedic corp. has been established on the purpose of development of high-tech medical equipment for healthy and happy human life and has been improved its capability of development on the four basis rehabilitation, posture (balance) evaluation and training, exercise therapy, and cognitive rehabilitation.

BlueCloud Inc.

7.2A06-005(030)

Address: 韩国 ROK(Republic of Korea) 1053-1Wonpyeong-dong, Gumi-si,, Gyeongsangbuk-do
Tel: 010-61258804
Email: 3160747850@qq.com
Web:

Blue Cloud started as a functional game company in 2010. The members of Blue Cloud have a common sense of goal to benefit society with technology. IT technologies are being delivered to every corner of society, dreaming of a world without technology gap.
BlueCloud was launched in 2010 as a Serious game company. We have a dream that technology will make society better.

Miles Medical LLC

7.2A06-005(031)

Address: 美国 United States of America 97E.Brokaw Road Suite 310, San Jose, CA USA 95112
Tel: 010-61256910
Email: 3160747850@qq.com
Web:

Miles Medical is based in San Jose, CA, USA. The company develops and distributes medical imaging products for the diagnoses of osteoporosis, breast cancer, lung cancer, and leukemia. Miles Medical's featured product is MetriScan, a digital X-ray system for screening and diagnosing osteoporosis.

AAT Alber Antriebstechnik GmbH

7.2A06-005(032)

Address: 德国 Germany Ehestetter Weg 11 72458 AlbstadtDeutschland
Tel: 010-61256910
Email: 15911039768@163.com
Web:

AAT has always adhered to the development purpose of "quality first, price advantage, fast delivery, service first, and customer cohesion" to provide enterprises with the most satisfactory services and technologies. Through a strong market service network system to provide enterprises with standardized, professional, diversified, all-round quality services.

IZENCO.,LTD

7.2A06-005(033)

Address: 韩国 412 yanggao south road, pudong new area, Shanghai ROK(Republic of Korea) Gyeonggi province, South Korea on the moon on the tomb on 3-12
Tel: 010-61258804
Email: 3160747850@qq.com
Web:

IZENCO., LTD. Is committed to the development, manufacture and sales of intelligent toilet products. With the aim of pursuing a healthy life, the company continues to build a high-end brand of intelligent sanitary ware series to meet the high-end, noble and high quality demands of domestic consumers.

서울시 강남구49길12 / KOREA TECH

7.2A06-005(034)

Address: 韩国 1008 6009 W ROK(Republic of Korea) No.12, No.49 Road, Jiangnan District, Seoul City
Tel: 01061256910
Email: 15911039768@163.com
Web:

KOREA TECH Company, established in 1997, is an excellent Korean enterprise specialized in cosmetics, health care, medical devices, daily necessities and other fields and established in product research and development, brand promotion, market operation and sales channels.

Biometrics LTD

7.2A06-005(035)

Address: 英国 United Kingdom Units25-26,Nine Mile Point Industrial Estate Newport,NP11 7HZ,UK
Tel: 010-61258804
Email: 3160747850@qq.com
Web:

Biometrics Ltd is a world leader in the design, manufacture and distribution of technologically advanced sensors, instruments and software for the demanding needs in biomedical and engineering research, clinical rehabilitation and educational settings.

Zynex Medical Inc

7.2A06-005(036)

Address: 美国 United States of America 9555 S.Maroon Circle Englewood CO80112,USA
Tel: 010-61258804
Email: 3160747850@qq.com
Web:

Background and Mission Statement Since 1996, Zynex Medical has been a leading provider of relief for patients with functional disability through the creation, distribution and marketing of the highest quality electrotherapy products available today.

Riharo Co.,LTD

7.2A06-005(037)

Address: 日本 Japan 5106 higashinaganuma, Inagi City, Tokyo
Tel: 010-61258804
Email: 3160747850@qq.com
Web:

Reharo makes it our motto to develop products placing more emphasis on practicality rather than news hooks. We are working on the development and manufacturing of our products based on the excellent experience reputation of Technotools Corporation in the rehabilitation market, and the robot technology of Exact Dynamics in the Netherlands.

Rehab-Robotics Company Limited

7.2A06-005(038)

Address: 香港地区 HongKong China Rm 108A, Blk9, 1/F, Enterprise, 5Science Park West AVE, Hongkong Science Park, Shatin, N.T., Hongkong
Tel: 010-61258804
Email: 3160747850@qq.com
Web:

Rehab-Robotics Co. Ltd. is committed to advance technologies in rehabilitation profession to help patients achieve maximum recovery outcome. Rehab-Robotics Co. Ltd. is an incubatee in the incubation programme operated by Hong Kong Science & Technology Parks Corporation and was recognized as the spearhead in rehabilitation industry of the region.

Hocoma AG

7.2A06-005(039)

Address: 荷兰 Netherlands Industriestrasse 4b, CH-8604 Volketswil, Switzerland
Tel: 01061256910
Email: 3160747850@qq.com
Web:

Hocoma is the worldwide market leader for the most advanced and enabling functional movement therapy solutions based on assessments.
Our products are successfully used around the world for intensive locomotion therapy (Lokomat), secure overground gait therapy (Andago), functional therapy of the upper extremities (Armeo Therapy Concept), early rehabilitation and patient mobilization (Erigo).

古野電気株式会社 / FURUNO ELECTRIC CO.,LTD.

7.2A06-005(040)

Address: 日本 Japan Bingku Nishinomiya 2-20
Tel: 010-61256910
Email: 3160747850@qq.com
Web:

Guye Electric Co., Ltd.(Furuno) is a Japanese electronics company. The company's main products are marine electronics, including radar systems, fish detectors and navigation instruments. The company also produces global positioning systems, medical equipment, and meteorological monitoring and analysis systems. Furano was founded in 1938 in Nagasaki, Japan. The company has subsidiaries in the Unite

LiteCure,LLC

7.2A06-005(041)

Address: 美国 United States of America 250 Corporate Blvd Suite B,Newark
Tel: 010-61258804
Email: 3160747850@qq.com
Web:

Located in New Castle, Delaware, LiteCure designs and manufactures medical devices for medical and veterinary healthcare professionals. LiteCure' s technology has been driven by sound scientific understanding – combining physics, laser science, and engineering to provide advanced laser technology and innovative solutions to the health care industry.

Televic Group nv.

7.2A06-005(042)

Address: 比利时 Belgium Leo Bekaertlaan 1, B-8870 Izegem, Belgium
Tel: 010-61258804
Email: 3160747850@qq.com
Web:

Founded in 1946, Televic Group is a professional electronics manufacturer with a long history of more than 70 years, headquartered in Brussels, Belgium. Televic is the market leader in high-end professional audio products and is active in the transportation, conference, multimedia learning, medical communication and other audio and video solutions markets.

Trautwein GmbH

7.2A06-005(043)

Address: 德国 Germany Trautwein GmbH Denzlinger Straße 12 79312 Emmendingen
Tel: 010-61258804
Email: 3160747850@qq.com
Web:

THE WORLD TRUSTS TRAUTWEIN. Especially when it comes to high-end products for the wellness industry, physical therapy and nursing, Trautwein baths and wellness systems are installed at hotels, physiotherapy surgeries, nursing homes and private homes – anywhere people like to relax or enjoy a treatment.

SANDYEAR INTERNATIONAL CO., LTD.

7.2A06-005(044)

Address: 香港地区 HongKong China 12/F Henley Building 5 Queen's Road Central Central Hong Kong
Tel: 01061256910
Email: 3160747850@qq.com
Web:

Hong Kong Sandyear International Co. Ltd. was founded in 2003, which specialized in the business and R&D of rehabilitation physio therapy equipment. Its trade partners include OG Japan, Biodex USA, Hydro Physio UK, Somethy S.A.S France etc.

Matsunaga Manufactory Co., Ltd.

7.2A06-005(045)

Address: 日本 Japan 484 Ohba, Yorou-cho, Yorou-gun, Gifu 503-1272, Japan
Tel: 01061256910
Email: 3160747850@qq.com
Web:

Yipin Ichigo, one person, one person, one person. In 1974, Matsunaga made a car chair. The love of Songyongmao, the founder of the company, is against the love of the company. Therapeutic machine production is immolated by the day to time.

株式会社トップラン

7.2A06-005(046)

Address: 日本 Japan 2-17-1, Bodo Station, Bodo District, Fukuoka City
Tel: 01061256910
Email: 15911039768@163.com
Web:

The company was founded in 2000 and has established long-term friendly cooperative relations with large gymnasiums, rehabilitation and physiotherapy centers and bone setting institutes in Japan. Its products are sold in Japan, mainland China, Hong Kong Region, and France, and are loved by professionals from all walks of life with high sales results.

Essity Hygiene and Health Aktiebolag

7.2A06-005(047)

Address: 瑞典 Sweden 405 03 GOTEBORG
Tel: 01061256910
Email: 15911039768@163.com
Web:

TENA, which has more than 40 years of nursing experience, is a leading brand of urinary incontinence management worldwide. Provide quality products and services to consumers and healthcare institutions in 90 countries around the world.

Novacare GmbH

7.2A06-005(048)

Address: 德国 Germany Bruchstrasse 48, D-67098 Bad Durkheim, Germany
Tel: 01061256910
Email: 15911039768@163.com
Web:

Bereits seit 1993 entwickeln und vertreiben wir medizinische Hilfsmittel mit dem Schwerpunkt Dekubitusbehandlung und-Prophylaxe. Auf dieser Website finden Sie detaillierte Informationen über unsere Hilfsmittel. 2009 erweiterten wir unser Produkt-Portfolio um den Bereich Rollstühle mit dem ersten 2011 führten wir die innovative ProLift-Serie ein mit einem breiten Angebot an hochwertigen

Shanghe gloves co. LTD

7.2A06-005(049)

Address: 日本 Japan 565 Tohori, Himeji Hyogo 670-0802 Japan
Tel: 010-61258804
Email: 15911039768@163.com
Web:

Shanghe gloves co. LTD it is synonymous with quality and innovation in the field of professional hand protection We empower our hands through technology and ingenuity Let the hands wearing gloves feel extremely comfortable and dexterous Take responsibility for the environment

Summation industries co. LTD

7.2A06-005(050)

Address: 日本 Japan 18-26, puhe 5 dingmu, green district, puhe city, saitama prefecture, Japan
Tel: 01061256910
Email: 15911039768@163.com
Web:

Japan's Summation industries co. LTD has nearly 20 years of experience in the design and manufacture of hyperbaric oxygen chambers. the SISGMA OVAL hyperbaric oxygen chamber products are well received in Japan, prompting the popularity of oxygen therapy and health care in Japan.

drive DeVilbiss Healthcare LLC

7.2A06-005(051)

Address: 美国 United States of America 100 DeVilbiss Drive Somerset, PA 15501, USA
Tel: 010-61258804
Email: 15911039768@163.com
Web:

Drive DeVilbiss Healthcare LLC, as the north American business division of hengyi group, has been engaged in strategic cooperation with drive, yingweikang, mailang and other international famous rehabilitation equipment brands for more than 10 years. In the United States, Canada and Latin America and other countries enjoy a high reputation.

CoolSystems,Inc / GR Coolsystem. inc

7.2A06-005(052)

Address: 美国 United States of America 1800 Sutter Street Suite 500 Concord California 94520 USA
Tel: 01061256910
Email: 15911039768@163.com
Web:

GR coolsystems, Inc. (cold therapy Systems) is a manufacturer of medical equipment, which engages in commercial activities under the name of Game Ready. The company mainly provides cold therapy and postoperative knee joint support, carrying bags, straps, rechargeable battery packs, single and double-headed connecting hoses, providing customer service for all over the world.

ACE E&L Co.,Ltd

7.2A06-005(053)

Address: 日本 日本神奈川县相模原市南区麻沟台6-9-9 Japan Ma Gou Tai 6-9-9, Nanbu District, Xiangmoyuan City, Kanagawa Prefecture, Japan
Tel: 01061256910
Email: 15911039768@163.com
Web:

Original hearing aid and sound collection equipment from Japan. Developed by ACE E&L Company of Japan, it aims to help hearing impaired patients improve their hearing. Improve the quality of life! Prevention of senile dementia! The analog circuit is used inside the product! No extra audio processing, no distortion and delay! Broad sound range, high and low tones! Easy to carry!

Zimmer MedizinSysteme GmbH

7.2A06-005(054)

Address: 德国 Germany Junkersstraße 9 D-89231 Neu-Ulm
Tel: 01061256910
Email: 15911039768@163.com
Web:

Zimmer, with 50 years of technical and medical experience, is one of the leading manufacturers of physiotherapy systems in Europe. Innovative German products offer award-winning designs. With modern engineering procedures and professional design quality assurance departments for testing, pioneering leadership can set new standards for the future while meeting today's standards.

DAESUNG MAREF CO., LTD

7.2A06-005(055)

Address: 韩国 ROK(Republic of Korea) 298-24,GONGDAN_RO, GUNPO-SI GYEONGGI-DO, KOREA
Tel: 01061256910
Email: 15911039768@163.com
Web:

Daxing has a long history of world-class medical equipment brands, with medical equipment technology, spanning 80 countries to become an enterprise that contributes to improving the health of all mankind. Major star MAREF pays more attention to the health of the people than the company's interests and is more satisfied with the domestic market to become a global medical device manufacturer.

SIGMAX corporation of Japan (Japan)

7.2A06-005(056)

Address: 日本 Japan 33F, shinjuku OAK building, shinjuku district, Tokyo, Japan
Tel: 01061256910
Email: 15911039768@163.com
Web:

SIGMAX Higma Health Protective Equipment is specially designed for Asians by Japan's SIGMAX Co., Ltd. After collecting 3-D anthropometric data of 3,000 Asians, Higma Company has developed ergonomic protective equipment products. After years of practical experience, it has continuously carried out development, testing and improvement, and finally developed high-quality protective equipment.

Mettler Electronics Corp.

7.2A06-005(057)

Address: 美国 United States of America 1333 south Claudina Street Anaheim, CA 92805 U.S.A
Tel: 01061256910
Email: 15911039768@163.com
Web:

Founded in 1957 by engineer and inventor Hal Mettler, ME Company is a global leader in portable ultrasound and electrical stimulation therapy equipment for sports medicine, physical therapy, chiropractic therapy and foot care therapy. Mettler's clients include US Olympic athletes, as well as numerous health care institutions and individual practitioners.

Bischoff & Bischoff GmbH

7.2A06-005(058)

Address: 德国 Germany Nr. 13 Becker-Goring Street, Karlsbade, Deutschland 76307
Tel: 010-61258804
Email: 15911039768@163.com
Web:

Bischoff & Bischoff GmbH is a traditional medical brand from Germany and one of the leading manufacturers in the field of medical assistance. Since the establishment of the medical brand and European factory in 1997, we have been devoted to the development and sales of medical equipment products.

Chang yiu international health technology limited (Hong Kong)

7.2A06-005(059)

Address: 台湾地区 Taiwan China Hang seng castle peak building, cheung sha wan, Kowloon, Hong Kong
Tel: 01061256910
Email: 15911039768@163.com
Web:

Chang yiu international health technology limited (Hong Kong). is an innovative technology company engaged in the production, research and development and sales of medical high-tech products. Focus on the international medical front-end stroke mirror rehabilitation theory, production and sales of the world's original flexible power rehabilitation auxiliary robot.

Medi GmbH & CO. KG

7.2A06-005(060)

Address: 德国 Germany Medicusstraβe 1, 95448 Bayreuth
Tel: 010-61258804
Email: 15911039768@163.com
Web: www.medi.de

medi, based in Bayreuth, Germany, is one of the world's leading manufacturers of medical aids. Following the motto "medi. I feel better", around 2,700 employees worldwide help people increase their quality of life. medi's products and treatments concepts contribute to treatment success for many diseases and ailments.

丰苗机械股份有限公司 / Feng miao machinery co. LTD

7.2A06-005(061)

Address: 台湾地区 Taiwan China no6 qingnian road yangmei dist taoyuan city
Tel: 010-61258804
Email: 15911039768@163.com
Web:

Amen was founded in 1995, self-reliance in professional research, development, production of ac/dc motor electric treadmill is given priority to, and the ability of r&d, manufacturing and marketing for a collective enterprises. The company's products include sports leisure products, medical rehabilitation equipment, professional fitness equipment, etc., can constantly update and d.

TRIM

7.2A06-005(062)

Address: 日本 Japan ハービスENTオフィスタワー 22F
Tel: 010-61258804
Email: 3583448@qq.com
Web:

TRIM founded in 1982 and listed on the 1st topix stock exchange in 2004, is trying to bring hydrogen-rich electrolysis water to every home in the simplest way. As of 2018, TRIM Japan has been TRIM for nearly 2 million users.

PARAMOUNT BED CO.,LTD.

7.2A06-005(063)

Address: 日本 Japan Tokyo jiangdong district Dongsha 2-14-5
Tel: 01061256910
Email: MA19920709@sina.com
Web:

Founded in 1947 Leaders of Medical Beds With an annual output of 300,000 Annual sales are about 700 million US dollars.
Production and sales are among the top in the world.

지엔비 메디텍 / G&B Meditech

7.2A06-005(064)

Address: 韩国 ROK(Republic of Korea) 130-2, Donghwagongdan-ro, Munmak-eup, Wonju-si, Gangwon-do South Korea
Tel: 01061256910
Email: 15911039768@163.com
Web:

G&B Meditech Device Technology Co., Ltd., the company specializes in upper limb comprehensive training device, intelligent upper limb rehabilitation training instrument, intelligent active and passive rehabilitation therapy device, multi-functional medical bed, etc. It is a specialized medical device for production, processing and sales of rehabilitation. And equipment companies.

Technical Fine Co., Ltd.

7.2A06-005(065)

Address: 日本 Japan 2-32-6 Yaguchi, Ohta-ku, Tokyo, Japan 146-0093
Tel: 01061256910
Email: m17600978085@163.com
Web:

Technical Fine Co., Ltd.founded in 2013, is located in no. 32-6, zengkou 2 dingmu, oita district, Tokyo. Its main business is the development, manufacturing, sales, maintenance and repair of ESD technology devices. Manufacture and sales of ESD technology products; Consulting business on ESD technology.

Torin Co., Ltd.

7.2A06-005(066)

Address: 日本 Japan Tokyo suginami shimoigusa 4-29-19 nakabe building bill 3F
Tel: 01061256190
Email: m17600978085@163.com
Web:

Torin co., ltd. is located in the construction building in central sugima district, Tokyo, Japan. Founded on November 21, 1975, the company mainly engages in the development, manufacture and sales of eco-air flooring. The main sales target for building materials, construction units, etc. Total sales amounted to $10 million.

TUNG KENG ENTERPRISE CO., LTD.

7.2A06-005(067)

Address: 台湾地区 Taiwan China No.1, Lane 160, Section 2, Tanfu Road, Tanzi District, Taichung City
Tel: 01061256910
Email: 2915882345@qq.com
Web:

The company's main business includes advanced fitness equipment, electric bicycles, golf carts, furniture and other products professional R & D and manufacturing and foundry. In addition to its own products, and to help European and American well-known brands OEM.

AIMEDIA,.LTD

7.2A06-005(068)

Address: 日本 Japan Active Intercity Hiroshima 9F, 12-1 Wakasacho, Higashi-ku, Hiroshima 732-0053
Tel: 010-61258804
Email: 1281505544@qq.com
Web:

AIMEDIA,.LTD create a comfortable living environment for our customers.Look at the problem from the customer's point of view, touch with the customer's hands, and stand on the customer's side.Comply with the unpredictable market and continue to innovate.Set a lofty goal and meet the challenge with creativity and the spirit of the pioneer.

ALTERG

7.2A06-005(069)

Address: 美国 United States of America US Fremont, CA 94538E
Tel: 01061256910
Email: 2915882345@qq.com
Web:

IterG® uses NASA differential pressure gas technology to develop trusted, state-of-the-art rehabilitation and training equipment. Our Anti-Gravity TreadmillTM technology enables people to move in new ways without painfully regaining mobility, improving health and improving physical performance.

Novotec Medical

7.2A06-005(070)

Address: 德国 Germany Durlacher Str. 35 Durlacher Str. 35 75172 Pforzheim
Tel: 01061256910
Email: 2915882345@qq.com
Web:

Novotec Medical was founded in 2001 and is headquartered in Pforzheim, southern Germany. It is a TÜV-certified Galileo® training device, a manufacturer of Galileo® therapeutic devices and a LeonardoMotorography® motion analysis system.

TECHNO CONCEPT

7.2A06-005(071)

Address: 法国 France Pitaugier Business Park 04300 MANE LA FRANCE
Tel: 01061256910
Email: 2915882345@qq.com
Web:

Patients' health and practitioners' satisfaction are the result of a combination of listening, competence and performance. TechnoConcept's primary mission is to meet these expectations alongside health professionals.

WEYERGANS

7.2A06-005(072)

Address: 德国 Germany Western Rhineland in Germany
Tel: 01061256910
Email: 2915882345@qq.com
Web:

Weyergans High Care AG is a medium-sized company located in the west of the Rhine in Germany. The core competence lies in the research, development and production of innovative cosmetics and medical applications.

OSCIMED

7.2A06-005(073)

Address: 瑞士 Switzerland Allée du Quartz 3 2300 La Chaux-de-Fonds Suisse
Tel: 01061256910
Email: 2915882345@qq.com
Web:

The company OSCIMED SA is based in the swiss Jura, famous area of the clock industry and high technologies. Since many years we are specialized in very innovative medical products protected by patents.Our aim is to offer fine products at the best prices as well as a service of quality for the satisfaction of our customers.

LEXCO CO.,LTD

7.2A06-005(074)

Address: 韩国 ROK(Republic of Korea) 7-22, Technodaero-2gil, HyeonPung-myun, DalSeong-Gun, Daegu
Tel: 010-61258804
Email: 3160747850@qq.com
Web:

LEXCO was founded in 1998 with our top priorities being our customers, maintaining a positive company culture and designing innovative products of the highest quality. Our mission is to continue to steadily grow our business in a responsible and sustainable manner.We manufacture a full range of professional commercial grade fitness equipment.

MODASON CO.,LTD / Korea MEDIRAM Joint-stock Company

7.2A06-005(075)

Address: 韩国 ROK(Republic of Korea) RM1003, NO.301,397, SEOKCHEON-OJUNG-GU, BUCHEON-CITY,
Tel: 01061256910
Email: 253966953@qq.com
Web:

Korea MEDIRAM Joint-stock Company was established in Seoul, south Korea, in 2009. it is a technology company that researches and develops medical devices and health products. Over the years, it has been working closely with scientific research institutions in the medical and health fields such as Europe, America and Japan, and has a rich experience research and development team.

CORTINA

7.2A06-005(076)

Address: 比利时 Belgium Europe Showroom Office Meersbloem Melden 42 B-9700 Oudenaarde Belgium Phone+3255335656 Fax+3255335657 info@cortina-group com
Tel: 01061256910
Email: 15911039768@163.com
Web:

CORTINA brand was founded in France in 1991 and joined the Belgian CortinaGroup Ge Tian Group 3 years ago. It focuses on medical and personal foot health care shoes. Oxypas has been serving global health care professionals for more than 26 years.

Dr. Wolff Sports & Prevention GmbH

7.2A06-005(077)

Address: 德国 Germany Postfach 2767, 59717 Arnsberg, Germany
Tel: 01061256910
Email: 15911039768@163.com
Web:

Dr. WOLFF, founded in 1993, has been committed to preventing sports injuries and providing medical solutions, and has now become Germany's leading supplier of rehabilitation products. We have the latest scientific research results and innovative ideas, which have enabled the company to continuously develop high-quality sports rehabilitation equipment and won many international awards.

CARING.Co.,Ltd

7.2A06-005(078)

Address: 日本 Japan 3-6-3 Chiyo, Hakata-ku, Fukuoka, Japan Chiyo University 2F
Tel: 01061256910
Email: 2915882345@qq.com
Web:

Caring's mission is to "provide better care for more people." The company maintains a constant attitude of learning and research by all staff headed by management. The company aims to be "all for the customer" and become a comprehensive care company that provides comprehensive care services.

NAUSICAA medical

7.2A06-005(079)

Address: 法国 France ZA POLE ACTIF 12 ALLEE DU PIOT 30660 GALLARGUES LE MONTUEUX FRANCE
Tel: 010-61258804
Email: 1281505544@qq.com
Web:

Founded in 1993 by Pierre-Henri CHAUZAT and established in the South of France, NAUSICAA Medical is a French designer and manufacturer of "Made in France" products for geriatrics, disability, rehabilitation, re-education and palliative care with a focus on moving and handling devices.

SecuRam Systerms, Inc

7.2A06-005(080)

Address: 美国 United States of America 3325 Grande Vista Drive Newbury Park, CA 91320
Tel: 01061256910
Email: 3583448@qq.com
Web:

SecuRam Systerms, IncThe company has more than 20 years of experience in research and development and production of high security locks. The products have passed UL and European CEN/VdS certification. Dongwu is a solution solution provider for high security locks.

TEKVOR CARE

7.2A06-005(081)

Address: 德国 Germany Fraunhofer Straße 851647 Gummersbach
Tel: 010-61258804
Email: 1281505544@qq.com
Web:

TEKVOR CARE offer a selected product range for both home care and health care. Our care beds are renowned for high quality, ergonomics, safety, comfort and hygiene, combined with an appealing design. Functional and simple handling features are a great relief in the daily life of both patient and nurse.
Our experienced team strives to offer our products at an optimum price/performance ratio.

Exo Atlet Asia

7.2A06-006

Address: 韩国 Korean
Tel:
Email:
Web:

GOOD MEDICA SPOLKA ZOGRANICZONA ODPOWIEDZIALNOSCIA

7.2A06-007

Address: 波兰 Poland Ul.ZIEMNIACZANA, nr 15, lok.-miejsc. WROCLAW, kod 52-127, poczta WROCLAW, kraj POLSKA
Tel: 0519-86252000
Email: liuqing@qjrehab.com
Web: http://goodmedica.pl/en

Since 2012 our firm GOOD Medica provides you with access to the highest quality medical equipment at an affordable price. We produce CPM devices for the knee and hip joint as well as other devices. Our offer is aimed at clients in Poland. We provide professional equipment, training courses concerning its usage, and service.

艾纳诗集团有限公司 / Air Nutri Solution Inc.

7.2A06-009

Address: 加拿大 Canada BC-VANCOUVER -142-3800 Wesbrook Mall V6T 1W5
Tel: 02131571060 / 604 496 5888
Email: bill1158@qq.com
Web: www.airnutri.com

是一家致力于空气荷电粒子与生命科学研发和商业化的高科技公司。ANS发明了世界领先的NAI芯片(模块)，荷电粒子波(频率)调谐(模块)作为两项尖端核心IP技术，并成功开发出Nutri sleep6慢波睡眠机，Air Nutri 300森林康养机，Air Nutri3幸福感(抑郁)治疗机，Air Nutri3(花粉)过敏源清除机等生活健康类系列电子产品。通过与物联网的整合，AIR NUTIR将成为生活健康类和生命科学医疗健康行业的先锋和领导者。
Air Nutri Solution (ANS) is a high-tech company that is dedicated to the development and commercialization of air — borned charged particles and life sciences. ANS has invented two cutting-edge core IP technologies, including the world's leading NAI chips (modules) and charged particle wave (frequency) tuning (module).

Bioptron AG

7.2A06-008

Address: 瑞士 CH-8832 Wollerau-Sihleggstrasse 23 Switzerland CH-8832 Wollerau-Sihleggstrasse 23
Tel: +41 43 888 28 00
Email: adan@incoman.com
Web: www.bioptron.com

BIOPTRON AG is part of the Zepter Group since 1996. BIOPTRON AG is one of the leading manufacturers of medical light therapy devices in the world today. Our company is dedicated to long-term, in-depth research and development, as well as the production of unique medical devices-the BIOPTRON Light Therapy System.

METABIOMED co.,ltd

7.2A07-001(001)

Address: 韩国 ROK(Republic of Korea) Chungcheongbuk-do-Cheongju-si-270, Osongsaengmyeong 1-ro, Osong-eup, Heungdeok-gu
Tel: +86-21-6280-6286
Email: cosmed@meta-biomed.com
Web: www.meta-biomed.com

Metabiomed is a manufacturer exporting surgical sutures, aesthetic sutures and dental materials to more than 100 countries around the world.

DAESUNG MAREF CO.,LTD

7.2A07-001(002)

Address: 韩国 ROK(Republic of Korea) Gyeonghi-Do-Gunpo-Si-298-24, Gongdan-Ro
Tel: 070-7813-7357
Email: China@dsmaref.com
Web: www.dsmaref.com

DS MAREF(DAESUNG MAREF CO., LTD.) is a professional company which has developing, producing and exporting the various pneumatic medical systems Through the various marketing fields such as Surgery, Post-operative, Physio, Sports/Rehabilitation and even Home care in global market by acquiring the certificates of FDA, CE, ISO9001, KGMP, KFDA, CFDA and etc since 1986.

S.THEPHARM CO.,LTD.

7.2A07-001(003)

Address: 韩国 ROK(Republic of Korea) Gyeonggi-do-Uiwang-si-#1111 and #1112, 19, Ojeongongeop-gil
Tel: +82 2 6933 0023
Email: roman@sbiomedics.com
Web: http://sthepharm.com

S.THEPHARM CO.,LTD. was established in 2016 to provide one-stop solution for anti-aging and aesthetic products. It is a subsidiary of S.BIOMEDICS which holds unrivaled technology in field of stem cell therapy.

Sungwon Medical Co., Ltd.

7.2A07-001(004)

Address: 韩国 ROK(Republic of Korea) Chungcheongbuk-do-Cheongju-si-199 Taeseongtabyeon-ro, Gangnae-myeon, Heungdeok-gu
Tel: +82-43-232-6424
Email: shyoo@swmed.kr
Web: http://www.swmed.kr/en

Sungwon Medical Co., Ltd. is a leading medical device manufacturer in South Korea, specialized in medical devices for use in Cardiology, Radiology treatment, Other Vascular Access, etc. In pursuit of reliable and constant growth, Sungwon Medical is continuously dedicated to develop innovative products and provide total medical solutions for health and happiness of humans.

HAYE CO, Ltd

7.2A07-001(005)

Address: 韩国 ROK(Republic of Korea) Daejeon-Daedeok-gu-85-203 Hannamrd
Tel: 042-672-3030
Email: wow321321@hanmail.net
Web: haye.co.kr

It is a company that is installed in the facility and space where denture users gather a lot, and can produce the product that can manage the contaminated denture cleanly.

Anytape Co., Ltd

7.2A07-001(007)

Address: 韩国 ROK(Republic of Korea) Gyeonggi-do-Hwaseong-si-26-6, Geonbae-gil, Bongdam-eup
Tel: 070-4168-2386
Email: Icejo87@daum.net
Web: www.anytape.kr

Anytape manufactures hydrocolloid bands and medical tapes those are harmless to the skin, accelerate healing process of wound and help prevent scar from external wound. Eco-friendly hotmelt tapes for industrial use and other products can be used in various fields such as automobiles, building materials through relentless research and development activities.

OFFICEJAEIN CO., LTD.

7.2A07-001(008)

Address: 韩国 ROK(Republic of Korea) SEOUL-GANGNAM-GU-CENTER,GANGNAM-DAERO 310
Tel: 82-2-6338-2547
Email: jksuk@officejaein.com
Web: http://www.officejaein.com

OFFICEJAEIN is a company which is specialized in consulting of the office environment and selling & exporting the furniture.
We also can help you to establish the global office environment over the world through a lot of experiences for exporting the products to China for many years.

Dongwon Medical

7.2A07-001(009)

Address: 韩国 ROK(Republic of Korea) Seoul-Seongdong-gu-240, Gwangnaru-ro
Tel: 82-10-3600-3843
Email: 78ryujihyun@gmail.com
Web: www.dongwonglobal.com

Dongwon Medical manufactures and sells absorbable sutures for minimally invasive surgery and was established in October 2014. We are also leading the market as the first generation manufacturing company in Korea. Dongwon Medical has various kinds of finished products with constant research and development, and has obtained GMP, ISO-13485:2016, KFDA, CE, FDA and other certifications.

NEO VISION CO., LTD.

7.2A07-001(010)

Address: 韩国 ROK(Republic of Korea) GYEONGGI-DO-YONGIN-SI-1705, 120(YOUNGDEOK-DONG), HEUNGDEOKJUNGANG-RO, GIHEUNG-GU
Tel: 86-31-627-5513
Email: export@neolens.co.kr
Web: https://www.neolens.co.kr/ch

Since the establishment in 1993, Neo Vision has grown up each year at the maximum rate and our products have become increasingly popular of all the customers in the world market. Our respectable customers' tender care for our products has contributed to our present success as one of the largest firms in the field of soft contact lenses.

HAYE CO, Ltd

7.2A07-001(011)

Address: 韩国 ROK(Republic of Korea) Daejeon-Daedeok-gu-85-203 Hannamrd
Tel: 042-672-3030
Email: wow321321@hanmail.net
Web: haye.co.kr

It is a company that is installed in the facility and space where denture users gather a lot, and can produce the product that can manage the contaminated denture cleanly.

Aladdin Co., Ltd.

7.2A07-001(012)

Address: 韩国 ROK(Republic of Korea) Gyeongsangbuk-do-Gyeongsan-si-#408 R&DB Center, Kyungil Univ. Gamasilgil 50, Buho-ri. Hayang-eup
Tel: +82-10-3837-5228 +82
Email: aladdin5181@daum.net
Web: www.limbrest.co.kr

LIMB REST is a healthcare product that corrects pelvis and strengthens core muscles by correcting sitting posture.

宏龙株式会社 / KOURYU CO., LTD.

7.2A07-002

Address: #402，NS building，2-13-5 Kaminarimon, Taito-ku, Tokyo-to, Japan
Tel: 0358300222
Email: rika@kou-ryu.co.jp
Web: www.kou-ryu.co.jp

宏龙株式会社，有着超过十年的日本知名品牌的运营经验，是专注于保健品研发、生产及销售为一体的跨国公司,涉及领域包括:健康食品的生产·贩卖·企划，日用品、美容品的生产·贩卖·企划，OEM商品的综合制造、批发，一般贸易输出输入等各个方面。公司秉持着为消费者健康服务的理念，在国际产业竞争非常严酷的今天，怀着对每一位一直以来支持、信任的客户的感激之心，不忘初心，砥砺前行。
KOURYU CO., LTD. has more than ten years experience in the operation of well known Japanese brands. It is a multinational company specializing in the research, development, production and sales of health products. Our business scope is including Production, sales, design of healthy food, integrated manufacturing of OEM commodities, wholesale, imports, exports of general goods.

Aussia Pharma OEM services Pty Ltd

7.2A07-003

Address: 澳大利亚 Australia NSW 2190-Greenacre-1B Bellfrog St
Tel: 0488688128
Email: aussia@aussia.com.au
Web: www.aussia.com.au

Aussia Pharma got 35 products under Aussia brand. The range of female care products Soy Isoflavones Plus calcium for women, Breast D formula, Probiotics plus for women represents the latest female care concept, looks after most important parts of body like Ovary, breast, skin, to overcome the most common female health problems. Aussia brand now is the number 1 female health care brand in Australia

nutrition care pharmaceuticals Pty Ltd

7.2A07-004

Address: 澳大利亚 Australia Victoria-Keysborough VIC 3173-25-31 Keysborough Avenue
Tel: 15989087482
Email: yinghui.yu@nutriunion.com
Web:

nutrition care是澳洲本土营养草药保健品制造商，由澳洲著名自然保健学教授伊恩 • 布莱特霍普创建于1978年，Nutrition Care旗下每一款产品，从原料验证、营养成分萃取、再到科学化生产、包装均由澳洲TGA认证自有工厂生产，从源头上严格把控，确保了产品卓越的品质。
Nutrition Care is an Australian native manufacturer of nutritional and herbal health products. It was founded in 1978 by Ian Brighthope, a famous Australian professor of natural health.The raw materials of each product are from natural plants and animals. Control from the source of raw materials to ensure product quality.

BLOSSOMS BH WHOLESALE PTY LTD

7.2A07-005

Address: 澳大利亚 Australia New South Wales-RHODES-5 AVERILL ST, RHODES,
Tel: 0061287658824
Email: EC@BLOSSOMSWHOLESALE.COM.AU
Web: blossoms bh wholesale pty ltd

Blossoms BH Wholesale Pty Ltd is a leading distributor for health and beauty products in Australia with sales networks covering metropolitan in Australia and New Zealand. More than 60 mainstream brands and 6,000 SKUs have been supplying to thousands of retail shops and pharmacies in both countries.

BONBACK(HK) CO.,LIMITED

7.2A07-006

Address: 泰国 Bangsaothong-Bangsaothong-133 Moo 17Bangplee Industrial Estate，BangnaRoad，Bangsaothong，Samutprakarn 10540 Thailand Thailand Samutprakarn-Bangsaothong-133 Moo 17Bangplee Industrial Estate，BangnaRoad，Bangsaothong，Samutprakarn 10540 Thailand
Tel: 18012612862
Email: dai@cthai.cn
Web: https://www.bonback.com

Bonback乌鸡，品牌起源于1902年，拥有百年的滋补历史。创始人得到泰国国王的赐姓。在1983年成立乌鸡Bonback工厂，目前成为泰国最大的燕窝工厂。Bonback即食燕窝获得泰国信任商标，泰国内务府OTOP五星推荐。有超过35年的燕窝生产经验，帮助超过400个燕窝品牌代工。
Bonback, originated in 1902, has a 100-year nourishing history. The founder get the surname of the king of Thailand. In 1983, the Bonback factory was established and is now one of the largest bird's nest factory in Thailand.
Bonback Instant Bird's Nest has won the Thai Trust Mark, and the Thai Ministry of Internal Affairs OTOP five-star recommendation. we have more than 35 years of bird's nest.

UNIVERSAL PHARMACEUTICALS PTY LTD,

7.2A07-007

Address: 澳大利亚 Australia NSW-Silverwater-9 Carolyn Street
Tel: (612)96484838
Email: design2@wealthyhealth.com.au
Web:

Wealthy Health(富康)品牌创立于悉尼。身为百年經驗草药世家的第三代传人的Laurence T. D.，为了让更多人享受到草本植物的纯天然疗效，于1995年 的 创 立 了Wealthy Health品 牌。Wealthy Health一直以自然理疗法为基础，萃取来自澳洲本土纯植物精华，致力于打造全球功能性营养补充剂高端品牌。
Wealthy Health Products are manufactured under strict control code of practice GMP. We only manufacture using world class state-of-the-art manufacturing facilities to meet the highest standard for machinery, procedures, and quality control.

Twin Lotus CO.,Ltd

7.2A07-008

Address: 泰国 Thailand Bangkok-56 Soi Seri Village, Srinakarin Road, Nong Bon, Prawet
Tel: 86(0)21-64601676*823
Email: wangxueting@twinlotuschina.com
Web:

Twin Lotus双莲集团创立于1977年，在泰国拥有40多年历史，是一家综合化的国际集团，公司主营天然日用品，燕窝滋补等产品。Twin Lotus双莲倡导天然、无负担的生活方式，致力于为全球消费者提供高品质的健康产品。双莲燕窝产自泰国南部洛坤府，该地是东南亚地区最好的金丝燕繁殖地之一，有来自暹罗海湾的天然海风，空气污染指数低，品质天然纯正，口感极佳，是美容养颜与滋补的尚品。
Twin Lotus Group, founded in 1977, has a history of more than 40 years in Thailand, is an integrated international group, the company in addition to the main natural daily necessities, bird's nest nourishment and so on. In Thailand, Twin Lotus advocates a natural and unburdened lifestyle, and is committed to providing high quality health products to consumers all over the world.

SHINKOWA HONGKONG BIO-TECHNOLOGY CO., LIMITED

7.2A07-009

Address: 香港地区 HongKong China RM 517 NEW CITY CTR 2 LEI YUE MUN RD KWUN TONG KL
Tel: 18552686120
Email: info@shinkowa.hk
Web: www.shinkowa.hk

香港新兴和生物科技有限公司，是日本新兴和制药株式会社在中国的总代理。新兴和制药株式会社是世界第一个将NMN添加到健康食品当中的公司，并设立了原创营养辅助食品品牌“未来实验室（MIRAILAB）”。本公司将以科学的根据作为基础，将实现世界性的生产性老龄化作为目标。
The SHINKOWA PHARMACEUTICALS CO.,LTD in Japan was the first Japanese pharmaceutial company to commercialize the NMN component and put it into the market, which is the sole legal drug company owning the component in Japan.

Star Combo Pharma Pty Ltd

7.2A07-010

Address: 澳大利亚 Australia NSW2164-Smithfieid-171-177Woodpark Rd
Tel: 023-65216066
Email: 28181299@qq.com
Web: www.starcombo.com.au

Star Combo Pharma Ltd 由华人企业家Star Zhang先生于 2004 年在澳大利亚创办成立。作为仅有的九家在澳洲本地拥有软胶囊产品生产许可证的制造商之一，服务于国内和不断增长的离岸市场（主要是亚洲国家）。目前已成为领先水平的健康和天然美容产品分销商和制造商。
Star Combo Pharma Ltd was founded by Chinese entrepreneur Mr. Star Zhang in Australia in 2004. As the only nine One of Australia's locally licensed manufacturers of soft capsule products serves both domestic and growing offshore markets (mainly in Asian countries).
It has become a leading distributor and manufacturer of health and natural beauty products

美國順天堂 / Sun Ten Laboratories

7.2A07-011

Address: 美国 CA-Irvine-9250 Jeronimo United States of America CA-Irvine-9250 Jeronimo Road
Tel: 9493340071
Email: michael.tsai@sunten.com
Web: www.sunten.com

Sun Ten Laboratories(美國順天堂)位于加利福尼亚州欧文市，專業提供各類營養補充劑的合同制造和私人标签。我们最先进的100,000平方英尺的制造工厂和完整的内部实验室通过了UL 和 NSF International的GMP认证。SUN TEN在各种形式的膳食补充剂的制造方面拥有多元化的专业知识和经验。
SUN TEN Laboratories, located in Irvine, California, offers contract manufacturing and private labelling. Our state-of-the-art 100,000 square foot manufacturing facility and full in-house laboratory is GMP certified by UL and NSF International. SUN TEN has a diverse area of expertise and experience in manufacturing for all forms of dietary supplement.

Evolution Health Pty Ltd

7.2A07-012

Address: 澳大利亚 Australia Vic 3012-West Footscray-6 McArthur Street
Tel: 4008298298
Email: cs@by-health.com
Web: https://www.lifespaceprobiotics.cn

Evolution Health Pty Ltd旗下品牌Life-Space，是澳大利亚益生菌专家，澳大利亚销量领先益生菌品牌，旗下产品孕妇、婴幼儿、儿童、成年人均可食用，满足不同人群及不同人生阶段的需求。
Life-Space通过研究人体微生态的平衡及多样性，致力于发掘人体微生态的各种可能……
Evolution Health Pty Ltd is the parent company of Life-Space, Life-Space is an Australian probiotic expert with leading sales volume in Australia. Its products are edible for pregnant women, infants, children and adults, meeting the needs of different populations and different life stages. Unlocking the possibilities of the microbiome is our mission.

露茜礼品及健康食品有限公司 / LUCY'S GIFT & HEALTHY FOOD INC.

7.2A07-014

Address: 加拿大 萨斯喀彻温省-萨斯卡通-福赛思622号 Canada SK-Saskatoon-622 Forsyth Cres
Tel: 010-66070358
Email: 1263890099@qq.com
Web:

露茜礼品及健康食品有限公司(LUCY'S GIFT & HEALTHY FOOD INC)位于加拿大草原省萨斯喀彻温省--萨斯卡通市。依托萨省得天独厚的自然环境和优势创立了自己的品牌LUCY' S加拿大一级白蜜。不仅拥有自己的蜂蜜品牌，还代理销售加拿大著名食品生产商的健康食品。
LUCY'S GIFT & HEALTHY FOOD INC.It's located in Saskatchewan, Prairie Province, Canada - Saskatoon City. Relying on the unique natural environment and advantages of Sa Province, it has established its own brand LUCY'S Canadian first-class white honey. It not only owns its own honey brand, but also acts as a sales agent for health food producers of famous Canadian food producers.

CATALO NATURAL HEALTH FOODS LTD.

7.2A07-015

Address: 5/F, Suite C-D, D2 Place TWO, 15 Cheung Shun St., Kowloon, Hong Kong
Tel: 4008523655
Email: info@catalo.com.hk
Web: www.catalo.com

CATALO多年来坚持采用天然原材料，并选用获得独特专利的品牌成分，以及通过临床证明的天然成分，为不同年龄、不同需求的人群提供优质的天然健康食品和服务。凭借优质有效的产品，CATALO连续四年成为香港销量第1的母婴儿童健康食品品牌，深受众多家长和孩子的信赖。我们的理念很简单：相信真正的健康和美丽是由内而外散发出来，所以致力于了解您的健康需要，以优质天然健康食品赋予您身体所需。
CATALO is a premium, well-trusted brand in nutritional foods and supplements, with products across multiple categories, with the primary focus on Maternal, Baby and Children (MBC) products. Efficacy and quality is at the forefront of the company's beliefs.

Hongkong Noromega biotechnology Co., Limited

7.2A08-001

Address: 香港地区 HongKong China Hong Kong-Hong Kong-Unit B, 22/F Arthur Commercial Building, No.33 Arthur Street, Kowloon, HK
Tel: 020-86612618
Email: info@noromega-cn.com
Web:

Noromega develops and sells nutritional supplements produced in Norway. Our focus is on manufacturing varied products/a varied product line with health enhancing effects. Our products are guaranteed through our use of reputable suppliers.

Lifeline Pharma AS

7.2A08-002

Address: 挪威 Norway Oslo-Oslo-Klingenberggata 4,0161
Tel: 020-86612618
Email: 350818653@qq.com
Web: www.lifelinecare.no

Lifeline Care is a range of nutritional supplements that were developed in Norway and launched on the Norwegian market in 2007. The products were created by professionals with long experience in the development and production of consumer health products. Our philosophy is to supply unique high-quality products that make a difference for the consumer.

株式会社雅嘉貿易 / MASAYOSHI LTD.

7.2A08-003

Address: 日本 东京-东京都-板桥区中板桥11番7号 Japan Tokyo-Itabashi ku-11-7 Nakaitabashi
Tel: 021-59883359
Email: 19909795@qq.com
masayoshi1093@yahoo.co.jp
Web: www.masayoshi-trading.com

株式会社雅嘉貿易致力于为人类提供高品质生活和健康，自主拥有营养健康领域的高精尖产品研发及生产，协助未病恢复健康，普及科学健康的生活方式，帮助人们抵御疾病与衰老，改善病痛，由衷祈愿人人都能每天过着健康的生活。
Everyone hopes to spend everyday healthy lives.We are preparing products that can be proposed in the future. We look forward to your expectations for Masayoshi Ltd.
In order to ensure the commonly distribution of these products, we have established a system that enables us to provide them with the results of our research and development.

麦克斯拜凯尔 / Max Biocare Pty Ltd

7.2A08-004

Address: 澳大利亚 维多利亚-南雅拉-教堂街667号 Australia VIC-South Yarra-667 Chapel St
Tel: 0380801303
Email: anna.shi@maxbiocare.com
Web: maxbiocare.com

Max Biocare麦克斯拜凯尔成立于2001年，总部设于澳大利亚墨尔本，是一家自身拥有科研机构，定点临床实验机构和产品生产厂家的天然保健品、婴儿食品和护肤品研发生产企业。Max Biocare 麦克斯拜凯尔以帮助人类实现健康快乐的生活为目标努力研发天然、科学、安全的高质量产品。
Max Biocare is an independent Australian owned and operated natural health company. Founded by healthcare practitioners who have many years of experience in the industry, we are committed to providing health solutions in the form of scientifically validated natural medicines.

BIO OURO COMERCIO DE PRODUTOS NATURAIS LTDA

7.2A08-005

Address: 巴西 Brazil Sao-Paulo -santana-Rua Voluntarios da Patria no 654, sala 921
Tel: 55-11-20635438
Email: lilianbiooouro@hotmail.com
Web: www.bioouro.com.br

The Brazilian Bio Ouro brand factory began in 1995. It is an integrated special factory for the production of apiculture products., The factory is over 7,000 square meters. Process, advanced equipment, standard operating procedures. The factory has obtained a number of high-end authoritative inspection certificates.The Bio Ouro brand works with a full range of quality products,。

挪威莱恩健康科技有限公司 / Lion Healthcare Europe AS

7.2A08-006

Address: 挪威 Buskerud-德拉门市-爱维乐克街14号 Norway Buskerud-Drammen-Ovre Eikervei 14
Tel: 004740645656
Email: mail@lionhealthcare.no
zy.kristoffersen@lionhealthcare.no
Web: www.lionhealthcare.no

挪威莱恩健康科技有限公司专注研发和商业化的前沿性生物科技公司。公司拥有世界领先的生物酶技术，用于提炼多种生产生物海洋成份，广泛用于糖尿病，痛风的预防治疗，抗衰老和肿瘤术后病人恢复的特医食品。公司与挪威各大科研院所和医院有良好的合作关系，多次获得国家科研项目基金的支持，拥有自主专利。公司为挪威健康产业集群，挪威生命科学产业集群的成员，欧洲临床营养和代谢学会的会员。
We are a Norwegian biotech company within world leading enzyme technology and bioactive peptides with different health benefits on lifestyle diseases such as diabetes, cancer, heart disease and gout. We diabetes and gout prevention and care expert and provide Nordic quality dietary supplement that are patented, clinical trial tested and with no side effects.

BMS PRODUCTS SDN BHD / 马来西亚朝阳燕窝有限公司

7.2A08-009

Address: 马来西亚 Malaysia JOHOR-TAMPOI JOHOR BARU-0201 BLOCK F DWI MAHKOTA TAMAN BUKIT ALIF
Tel: 15915947006
Email: bennyyoh@hotmail.com
Web:

马来西亚朝阳燕窝有限公司成立於2015年，主要业务包括燕窝清洗及燕窝销售 。公司专营马来西亚高品质纯正燕窝批发与零售，所有产品经过精心挑选及古法手工挑毛，不含添加物，防腐剂及任何化学成份 。本次参展的主要目的是寻找经销商及长期的合作伙伴。
BMS PRODUCTS SDN BHD established in year 2015. Our teams in Malaysia are engaged in processing, marketing, wholesale high quality Bird Nest . All products are carefully selected in Malaysia & processed manually without any chemical or artificial content. Purpose of our participation in CIIE are looking retailer and long term business partner & importers .

SGSBEAUTY

7.2A08-007

Address: 马来西亚 SELANGOR-CHERAS-18-DJALAN BS 9.TAMANBUKIT SEGAR,43200 CHERAS Malaysia SELANGOR-CHERAS-18-DJALAN BS 9.TAMAN BUKIT SEGAR,43200
Tel: 021-3269968 / 012-7612877
Email: 24917228@qq.com
Web:

SGS BEAUTY is registered and established in Malaysia. Our company has a wholesale business model and a professional technical and distribution team. If you are interested in our products, technologies or services, you are welcome to consult us

GANOHERB INTERNATIONAL, INC. / GANOHERB INTERNATIONAL INC.

7.2A08-010

Address: 美国 United States of America CA-PASADENA-133 NORTH ALTADENA DRIVE UNIT 400
Tel: 0591-83053398-3052
Email: yjc@xianzhiluo.com
yjc@xianzhilou.com
Web: http://www.ganoherb.us

GanoHerb成立于2014年，专注于灵芝草本研发和业务推广。公司业务涉及北美洲、澳洲、欧洲、加拿大、亚洲等30多个国家和地区，在中国福建武夷山脉设立有全球有机灵芝供应链基地。目前GanoHerb公司研发出了灵芝滴剂、灵芝咖啡、灵芝奶茶、灵芝饼干、灵芝维生素、灵芝牙膏、灵芝精油皂、灵芝胶囊等数十个品种，向世界健康事业带去福音。
Since its establishment in 2014 GanoHerb International Inc. has been specializing in the development and promotion of Ganoderma lucidum products. GANOHERB has established a global organic Ganoderma supply chain base in the Wuyi Mountains, Fujian,China. It has so far developed dozens of products such as Ganoderma Coffee and Ganoderma Capsules,which has brought good news to the cause of human health

美国盛优生命科技股份有限公司 / SANULIFE INC.

7.2A08-012

Address: 美国 马里兰-巴尔的摩-奥尔良街1550号 United States of America Maryland-Baltimore-1550 Orleans Street
Tel: 13801242687
Email: 1101510300@qq.com
Web:

美国盛优生命科技股份有限公司(SanuLife Inc)于2017年在马里兰州创立，旨在打造独具特色的全球综合健康服务平台，着重研发基于科学的健康管理、生物技术和修身益智产品，建立智慧型精准服务体系以及大健康产业链，为用户提供一站式、定制化、智慧型身心合一的精准健康服务。
SanuLife Inc, founded in Maryland in 2017, aims to build a unique global integrated health service platform, focusing on scientific health management, biotechnology and self-cultivation products, and to build a smart precision service system and a large health industry chain.Provide users with one-stop, customized, intelligent, physical and mental integration of accurate health services.

KOPERASI PENTERNAK BURUNG WALIT MALAYSIA BERHAD

7.2A08-008

Address: 马来西亚 Malaysia KEDAH-No. 917 & 918, Jalan Sentosa 5/5, Taman Seri Sentosa
Tel: 0551-62240729
Email: 609460410@qq.com
Web: www.ebn-kowalit.com

Koperasi Penternak Burung Walit Malaysia Berhad (P-6-0601) situated in Lunas, Kedah began operating in the processing of edible bird nest in the year 2015. It is the only bird nest processing facility in Malaysia that has accredited cleanroom Grade 'D' processing area to ensure a safe and high quality product. We got CNCA, Halal, VHM, MeSTI, HACCP, GMP, ISO 22000 and and ISO 9001.

POLYMER TECHNOLOGY SYSTEMS, INC

7.2A08-011

Address: 美国 United States of America Indiana-Indianapolis-7736 Zionsville Road
Tel: 86-0731-89935548
Email: yuan.liu0707@sinocare.com
Web: www.ptsdiagnostics.com

PTS Diagnostics is a point-of-care biometric testing company that drives action and connects people to improved outcomes through our People, Technology and Service. As a comprehensive point-of-care diagnostics company, we design, manufacture, and market products for distribution in more than 135 countries around the globe.

元弘草本科研有限公司 / Biomed Herbal Research Co.,Ltd.

7.2A08-013

Address: 台湾地区 台中市-台中市北区崇德路一段631号14楼之2 Taiwan Tai Zhong-14F-2, NO.631, Sec.1, Chongde Rd., North
Tel: 021-52750688#12
Email: Nutrabest.cn02@biomed.com.tw
Web: http://www.nutrabest.com.cn

我们专精于天然功能性保健营养生技领域，拥有从专利保健原料开发生产、打造剂型平台、检验认证、功能确效到制成商品的完整产品营销规划能力，以创新的思维打造全方位生物科技整合平台，随时因应客户需求，量身打造客制化专属服务，为国际市场开发并提供天然纯粹、效果优异的天然保健营养生技原料及产品。
We are specialized in the area of functional natural health care and nutritional biotechnology and possess the complete product marketing and planning ability from developing and manufacturing the patent ingredients, building the dosage form platform, executing the inspection and certification to turning out the marketable products.

Marphyl Marine Phytoplankton Company INC

7.2A08-014

Address: 加拿大 Canada BC-Vancouver-181 West 1st Ave
Tel: 1-2505911686
Email: info@comingcanada.com
Web: https://marphyl.com

公司全系产品以海洋单细胞浮游植物海藻为原料，产地来自加拿大乔治亚海峡。这是目前世界上唯一一种包含200多种海洋单细胞微藻物种的超健康产品。本公司系列产品包括海洋微藻功能性超级营养食品、海洋活性低钠营养盐、以及海洋微藻有机生物植物营养液-有机肥产品。所有产品均为100%纯天然海洋生物制剂，全力为人类健康和自然环境护航。公司获得多个北美权威机构的认证，持有加拿大卫生部的天然健康食品批号 (NPN)。

The core of all our products is 100% all-natural, wild, multi-species marine phytoplankton. It is the foundation of life in the ocean and has been called the most nutritionally dense food on the planet. We are proud to bring it to your home so that you can easily nourish your body and the environment you live in.

Vital-Trend Kft

7.2A08-016

Address: 匈牙利 Hungary Budapest, 1046 Szent László tér 7.
Tel: +36 706222515
Email: info@vitaltrend.hu
Web: www.vitaltrend.hu

企业开展膳食营养补充剂的创新研发与生产加工已逾十年，提倡以接近自然纯净的方式，避免添加剂与调味剂的使用,给人类带来健康与活力的同时，引导建立膳食补充剂的新趋势，这就是Vital-Trend. Kft名称的由来，企业目前研发销售近150余种专利产品，包括氨基酸、维生素、矿物质和微量元素、植物提取物、鱼油和各种必需脂肪酸、天然甜味剂和其他产品。

Enterprises have been developing innovative research, development, production and processing of dietary supplements for more than ten years. They advocate that the use of additives and condiments should be avoided in a way close to natural purity, which will bring health and vitality to human beings. At the same time, they should guide the establishment of a new trend of dietary supplements. This

加拿大细胞源生命健康科技有限公司 / Cellgen Care Inc.

7.2A08-017

Address: 加拿大 加拿大温哥华西林荫大道5445号 Canada 5445 West Boulevard
Tel: 15950809099
Email: 416694559@qq.com
Web:

加拿大细胞源生命健康科技公司自有品牌cellgen，主要研发生产细胞的营养，细胞的排毒，细胞的修复及延缓细胞衰老等系列产品。应用最前沿的生命医学技术和自然绿色物种，开发研制系列天然免疫调节产品和干细胞生物制剂，激发机体再生系统，延缓生命衰老进程预防疾病，同时有效的帮助肿瘤患者延长生命，提高生存质量和生活品质。

Cellgen, the private brand of Canadian cell source life and health technology company, mainly develops and produces cell nutrition, cell detoxification, cell repair and anti-aging products. Apply the most cutting-edge life medicine technology and natural green species, develop and develop a series of natural immune regulation products and stem cell biological agents, stimulate the body regeneratio

肯尼亚植物钻石有限公司 / Kenya Botanic Diamonds Ltd

7.2A08-018

Address: 肯尼亚 Kenya MACHAKOS-MACHAKOS
Tel: +254717226789
Email: botanicdiamond@gmail.com
Web: www.botanicdiamond.co.ke

肯尼亚植物钻石有限公司是一家专注于非洲特色植物商业开发的公司。公司秉承“纯植物、原生态”理念，以非洲原生态植物为原料生产天然营养保健品、美容产品、特种食品，为最终用户提供天然健康、美容和营养！目前，公司已经在植物保健、植物美容、富硒食品三大产业完成了产品布局。

产品包含：赤道富硒紫茶、赤道富硒红茶、酋长的秘密、魔棒牙膏、辣木胶囊、没药、乳香等。

KENYA BOTANIC DIAMONDS LTD. is a private company focusing on the commercial development of African plants. Adhering to the concept of "pure plant and original ecology" and developing from African native plants, the company provides the end users with natural health products, beauty products and African specialty foods.

加拿大红枫嘉源国际健康产业 / Red Maple Bio Inc.

7.2A08-019

Address: 加拿大 Canada QC-Brossard-6300 Avenue Auteuil #501, Brossard, QC J4Z 3P2
Tel: 17701856087
Email: china@redmaplebio.com
Web:

加拿大红枫嘉源国际健康产业由业内著名学者和领域内顶尖人士共同创立，以推广健康新概念和研究、开发相关健康产品为主，结合医学、生物学、基因学及食品科学等的最新成果，提供天然、安全、高效的高科技健康产品。

红枫公司的专家团队历经多年，利用最新科学研究成果，通过多年市场调研，医学研究，效果分析，临床试验等层层环节，精选而出二十多个系列产品，超过数百种独立研发的产品配方，以解决当下人类的各种健康新问题。

Red Maple Bio was founded by Industry experts in medical and natural health field. We integrate the latest scientific, medical, biological, genetic, and food science research results to provide the most cutting-edge, thoroughly researched, and essential items for our customers. By targeting on different specific health issues, we provide hundreds of individual product in more than 20 categories.

4Excelsior / 4Excelsior Nutrition Inc.

7.2A08-020

Address: 美国 United States of America 1206 N. Miller St., Suite D, Anaheim, CA 92806
Tel: 15052870221
Email: qian_cai@4excelsior.com.cn
Web:

美国4Excelsior是知名品牌4Excelsior、Fresh Nutrition、Golden Era Nutrition、Joy Organic、Ultra等产品的生产制造商，产品涵盖运动营养、有机素食/超级食品健康系列、富氢抗氧化片、维生素矿物质、美白抗氧化抗衰老及其他功能性营养膳食补充剂，产品销往16个国家和地区。

4Excelsior is a well-known brand in the United States, which has five brands, including Fresh Nutrition, Golden Era Nutrition, Ultra, etc. The products cover sports nutrition, organic vegetarian/super food health series, hydrogen-rich antioxidant tablets, vitamins and minerals, whitening anti-oxidation and anti-aging and other functional nutritional dietary supplements, and are sold to16 countries

United Natural Products Alliance

Address: 美国United States of America, 1075 Hollywood Avenue SLC, UT 84105, USA
Tel: (801) 474-2570
Email: daniel@unpa.com
Web:

www.unpa.comThe United Natural Products Alliance (UNPA) is an international association representing more than 100 leading natural products, dietary supplement, functional food, and scientific and technology and related service companies that share a commitment to providing consumers with natural health products of superior quality, benefit and reliability. Founded in Utah—recognized as the epicenter of dietary supplement manufacturing in the United States—in 1992, UNPA was instrumental in the passage of the 1994 Dietary Supplement Health and Education Act (DSHEA) and continues to take a leadership position in state and federal legislative and regulatory issues and industry best practices.

Natural Factors Inc

7.2B01-001(001)

Address: 美国 United States of America 1550 United Boulevard Coquitlam, BC Canada V3K 6Y2
Tel: (778) 284-7423
Email: cmoreira@factorsgroup.com
Web: https://naturalfactors.com

Natural Factors is one of the largest manufacturers of nutritional products in North America. But our origins reach back to the 1950s, and right from day one, we've always been fully committed to making products right. We are not a public company with shareholders to impress. Instead, we care about impressing you.

Garmon Corp

7.2B01-001(002)

Address: 美国 United States of America 27461 Vía Industria, Temecula, CA 92590
Tel: (562) 400-8406
Email: timl@naturvet.com
Web: https://naturvet.com

Manufacturing products to ensure the superior quality of life our pets deserve. Garmon Corp. is a fully compliant cGMP Standards facility, following the highest industry standards.We are an FDA registered and audited facility,as well as third party audited by U.L. Labs.We are also an NASC Audited Member carrying the NASC Seal on our labels,providing a symbol of "quality assurance" for consumer.

Informa Markets

7.2B01-001(003)

Address: 美国 United States of America 2020 North Central Avenue Suite 400 Phoenix AZ 85004
Tel: (480) 281 6798
Email: jiani.lai@informa.com
Web: www.informa.com

Informa Markets creates platforms for specialist markets to connect, trade, innovate and grow. We operate over 500 major, branded exhibitions where buyers and sellers working in a specialist market can meet face to face, see and show products, conduct business and build relationships. We also provide a range of digital solutions based on data and expert content that connect and engage businesses.

Wholistic Pet Organics

7.2B01-001(004)

Address: 美国 United States of America 341 Route 101 Bedford, NH 03110
Tel: (888) 452-7263
Email: john@wholisticpetorganics.com
Web: https://www.wholisticpetorganics.com

We pride ourselves in using only the highest quality, whole-food, and certified organic ingredients, regardless of the cost. These food ingredients provide essential nutrients for pets' optimal health.

Jigsaw Health

7.2B01-001(005)

Address: 美国 United States of America 9035 E. Pima Center Pkwy, Ste 3, Scottsdale, AZ 85258
Tel: (888) 352-5050
Email: patrick@jigsawhealth.com
Web:

Since 2005, Jigsaw Health – "The Magnesium People" – has been developing science-based dietary supplements with a focus on Magnesium featuring Sustained Release Technology, which controls the release of active ingredients so absorption can happen over time.

Uckele Health & Nutrition Inc

7.2B01-001(006)

Address: 美国 United States of America 5600 Silberhorn Hwy Blissfield, MI 49228 USA
Tel: (800) 248-0330
Email: mike@uckele.com
Web: www.uckele.com

At Uckele, we have committed ourselves to the science of understanding good nutrition. For over 50 years we pride ourselves in formulating and manufacturing the best dietary products on the market for you, your dog and your horse. As a family business, we've built a solid reputation as a trusted leader in the production of the highest quality nutritional supplements available.

Trace Minerals Research (TMR)

7.2B01-001(007)

Address: 美国 United States of America 1996 W. 3300 S. Ogden, Utah 84401
Tel: (800) 624-7145
Email: stever@traceminerals.com
Web: www.traceminerals.com

Trace Minerals Research (TMR) is the ionic mineral supplement brand. TMR offers improved delivery systems, bulk minerals, and private label ingredients. Company sales have increased by over 1,700%, and more than 100 SKU's have been added to the product line.

Cyanotech Corporation

7.2B01-001(008)

Address: 美国 United States of America 73-4460 Queen Kaahumanu Hwy. Suite #102 Kailua-Kona, HI 96740
Tel: (800) 395-1353
Email: info@cyanotech.com
Web: www,cyanotech.com

As a world leader in the production of high value natural products derived from microalgae, we are guided by the principle of providing high quality microalgae products for health and human nutrition in a sustainable, reliable and environmentally sensitive operation.

Now Health Group, Inc.

7.2B01-001(009)

Address: 美国 United States of America 244 Knollwood Drive, Suite 300 Bloomingdale, IL. 60108
Tel: (630) 545-9098
Email: tonia.decicco@nowfoods.com
Web: www.nowfoods.com

Now Health Group, Inc. doing business as NOW Foods, manufactures and distributes food products. The company offers dietary supplements, natural foods, sports nutrition, and personal care products.

National Animal Supplement Council

7.2B01-001(010)

Address: 美国 United States of America AZ 85376-Sun City West-PO Box 5168
Tel: 760.445.4760
Email: b.bookout@nasc.cc
Web: www.nasc.cc

NASC's overriding goal is to promote the health and well-being of non-human food chain animals that are given animal health supplements by their owners, and to protect and enhance the integrity of the animal health product industry.

Country Life, LLC

7.2B01-001(011)

Address: 美国 United States of America 180 Vanderbilt Motor Parkway Hauppauge, NY 11788
Tel: (800) 645-5768
Email: wlucas@countrylifevitamins.com
Web: http://www.countrylifevitamins.com

Since our founding in 1971, we have always been passionate about providing you with the opportunity to achieve great health. Throughout our 40+ year history as a leader in the natural health industry, we've reached a number of milestones in the pursuit of helping you reach a healthier, happier you.

Primo Pup, LLC

7.2B01-001(012)

Address: 美国 United States of America 4425 E Agave Rd, Suite 106, Phoenix, AZ 85044
Tel: (855) 957-7466
Email: cjones@primopup.com
Web: www.primopup.com

At Primo Pup Vet Health, we obsess about creating well researched, well documented, scientifically based solutions to help pets live healthier lives. Our innovative products are formulated by a team of veterinarians, compounding pharmacists and canine nutritionists to support the wellness of companion animals. We focus on providing functional health products that support specific lifestyles.

Grand Meadows, Inc.

7.2B01-001(013)

Address: 美国 United States of America 1607 West Orangegrove Ave. Suite E Orange, California 92868
Tel: (714) 628-1690
Email: nickh@grandmeadows.com
Web: www.grandmeadows.com

Founded in 1983 by Angela Slater, Grand Meadows has been there since the beginning. Vitamin and mineral blends of the time targeted general well-being. A passionate, lifelong horse person, Angela had spent many years in the human nutritional supplement business. Frustrated over the poor quality equine formulations and quality of products available for her horses, she decided to make her own.

韩国Huluwa A&C株式会社 / Korea Huluwa A&C Co., Ltd.

7.2B01-002

Address: 韩国 金山郡-忠清南道-郡北面 内斧里 369-1 ROK(Republic of Korea) Chungcheongnam-do-geumsan-gun-369-1，naebu-ri，gunbuk-myeon
Tel: 15801216766
Email: 961938399@qq.com cumbarm@hanmail.com
Web:

韩国A&C株式会社积极开发人参为原材的保健品、食品、化妆品等事业，努力发展成为全球化、多元化经营的一流企业.目前A&C株式会社拥有人参酒厂、人参化妆品研究中心、博物馆等固定资产。公司旗下有“護眞堂”、“호루와”等多个著名商标专利和完善的销售网络。主要从事高丽参种植加工，红参加工，技术研发销售、进出口贸易。人参产品主要有人参含片、人参精丸、人参提取液、人参化妆品。
Korea huluwa A&C Co., Ltd. has a number of well-known trademarks and perfect sales networks such as "huzhentang" and "huluwa". Mainly engaged in the cultivation and processing of Korean ginseng, red participation in labor, technology research and development sales, import and export trade. Ginseng products are mainly ginseng tablets, ginseng essence pills, ginseng extract, ginseng cosmetics.

MedicaNatumin / MedicaNatumin AB

7.2B01-003

Address: 瑞典 Sweden Jönköping-Östra Storgatan 20, 2tr 553 21
Tel: +46 723067788
Email: export@medicanatumin.se
Web: www.medicanatumin.se

Started in 1948, MedicaNatumin has become a leading company in health industry in Scandinavia with a portfolio including nutrition supplements like Ecomer Gold, L-argiplex Total, Hai Optimizer, and skincare series Jabushe and Dermyn.

生命720有限公司 / Life 720 Company Limited

7.2B01-004

Address: 香港地区 New Territories-Tsuen Wan-新界 荃湾 沙咀道6号 嘉达环球中心8楼810-811室 Hong Kong New Territories-Tsuen Wan-Room810-811 8/F The Octagan 6 Sha Tsui Road
Tel: +852 26036322
Email: juliana@sdtlbio.com
Web: sdtl.org www.sdtl.org

生命720有限公司是SDTL®抗氧化、保健养生、享誉海外的品牌全球总代理。
SDTL®以革命性小分子技术，破解植物抗氧化成份至比纳米更小，穿透肌肤迅速渗入细胞进行修复，焕发自疗机制，对抗衰老，回复年轻健康神采。
现在无论小孩或年长人士都手机不离眼，而眼睛干涩及疲劳是众多眼部问题的先兆，SDTL®亮睛 微分子喷雾人体测试，使用仅15分钟，7成以上人士明显改善干眼问题，眼睛舒适度有明显改善。
Life 720 Company Ltd. is the global distributor of the renowned antioxidant and healthcare brand, SDTL®, which uses revolutionary small molecule technology to break down plant antioxidants into sizes smaller than nanometer scale, enabling these plant antioxidants to penetrate the skin and quickly diffuse into cells for repair, trigger self-healing mechanism, anti-aging and restore youthful health.

美国马拉松国际参业有限公司 / Marathon Ginseng International Inc

7.2B01-005

Address: 美国 United States of America Wisconsin-Weston-4613 Camp Phillips Road
Tel: 01-7155712426
Email: DrGinseng@MarathonGinseng.com
Web: https://marathonginseng.com

美国马拉松参业2010年由猛客上校及姜铭涛博士创办于威斯康星花旗参之都马拉松郡，本司传承猛客家族百年传统技术种植优质花旗参，产品畅销美国，日渐成为美国华人引以为傲的品牌。目前产品包括猛客®高端品牌，花旗参衍生产品包括面膜精油，Ironman®参酒及 Dr Jonseng系列高度提纯物的保健品。
Marathon Ginseng International Inc was founded in 2010 in the Ginseng Capital of America, Marathon, Wisconsin. by partners lead by Col Monk and Ming Tao Jiang PhD.
Our mission is to produce premium quality ginseng based on the Monk family's 100 years of tradition and to distribute Monk Garden Brand worldwide. Our products include premiums ginseng gift sets, cosmetics and wine and liquor.

JAPAN ANKEI CO.,LTD.

7.2B01-007

Address: 日本 Japan NAGOYA- 4-16-29 SAKAE NAKA-KU
Tel: 13506270020
Email: 1059489232@qq.com
Web: http://www.alphay-japan.com

日本ANKEI株式会社成立于2005年，是一家专业保健食品研发和生产企业。企业专注营养健康事业，倡导更加优质美好的生活方式，把“快乐·健康”的理念融入到生活的每一天，代表着日本保健品的最高品质，公司产品以日本最新科研成果为依托，严格遵循安全第一的原则，产品以纯天然，无添加，不含西药成分为特点，优质多样化的健康产品，为广大消费者创造更加健康快乐的品质生活。
The enterprise specializes in R&D and production of healthy food, focuses on nutritional health industry, advocates better way of life, brings the concept of "happy plus health" into the daily life, which also represents the top quality of Japanese health care products, developed by the Japan latest scientific research achievements, pure natural without addition of any western medicine.

嘉億企業股份有限公司 / CHIA YI CO.,LTD

7.2B01-008

Address: 台湾地区 三民區-高雄市-堯山街74之2號 Taiwan Kaohsiung City-NO.74-2, Yaoshan St., Sanmin Dist.,
Tel: 07-7317861
Email: odisign@gmail.com
Web:

嘉億企業股份有限公司創立於1971年，為專業的藥品與醫療保健產品進口商。
嘉億的行銷通路包含醫院、診所與藥局。我們擁有具備十年以上專業經驗的當地行銷商團隊，累積了為數不少的客戶群。
多年來公司以追求產品的最高品質為理念，引進創新與符合國人需求的高優質保健產品，期望以增進國人健康及福祉為企業長遠經營的目標。
Chia Yi Co., Ltd. was founded in 1971 as a professional importer of pharmaceutical and healthcare products.
Our clients include hospitals, clinics and pharmacies. We have an experienced sales team. We aim to introduce high quality health care products to improve people's health and welfare.

新亞薑糖（香港）有限公司 / SIXFIFTEEN IMPORTS-EXPORTS LIMITED

7.2B01-009

Address: 香港地区 新界-Tsuen Wan-荃灣海盛路3號TML 廣場B座 23樓 B1室 Hong Kong N.T.-Tsuen Wan-B1,23/F,TML Tower,No.3 Hoi Shing Road
Tel: 008683892277 / 008653283892277
Email: chris@qdziya.com
Web: www.sinagingerglobal.com

1920年，福建籍华侨杨彩绘先生怀揣梦想到达印度尼西亚创业，历经15年摸爬滚打，杨彩绘先生于1935年创立了新亚姜糖。公司历经近百年的风风雨雨，先后经历了世界经济危机、第二次世界大战、印尼排华等一系列事件，依然砥砺前行，成就了如今的“姜山事业”。新亚人在三代领导人的带领下以坚韧不屈、锲而不舍的信念和精神，跨越道道障碍，突破重重困境，将公司发展成印尼当地最大的食品企业之一。
SINA Ginger Candy established since 1935,with a long history more than 84 years; Now has been the most famous manufacturer of Ginger candy in Indonesia. Headquarters locate in Hongkong.

奥發寰球控股股份有限公司 / Alfa Global Holdings Inc.

7.2B01-010

Address: 美国 CA-City of Industry-717 Nogales St. United States of America CA-City of Industry-717 Nogales St.
Tel: (626) 600-9898 x 101
Email: albertwang@alfaglobalholdings.com
Web: www.alfaglobalholdings.com

Alfa Global Holdings Inc., founded at 2014 in south California, our goal is assisting international companies set up business in different countries with professional team support. In the past three years, we successful launch US Brands of beauty , nutrition products into China Market online & offline to increase their brand awareness and growing the marketing share.

美国太子行有限公司 / Prince of Peace Enterprises, Inc.

7.2B01-011

Address: 美国 United States of America CA 94551-Livermore-751 N Canyons Pkwy
Tel: 021-58552783
Email: bellez@popus.com.cn
Web: https://popus.com

美國太子行於1983年正式成立，作為一個多元化的公司，美國太子行專門從事市場營銷，進口及代理商。代理產品包括精美食品、飲料、保健品，天然外用非處方止痛藥（如世界著名的萬金油®）、中草藥製品、茶葉；美國太子行同時亦從事產品配方研究、包裝，以至其他品牌的代工生產，在行內贏得美好的聲譽。美國太子行公司總部位於美國加州的舊金山灣區，其分公司則設在紐約、洛杉磯、香港地区、中國及馬來西亞。
Prince of Peace® Enterprises, Inc., founded in 1983, earned its reputation as a leading and diversified company, specializing in the marketing, importing and distribution of gourmet products, beverages, dietary supplements, natural OTC topical analgesics (like world famous Tiger Balm®), herbal products and teas; as well as product formulation, packaging and private labeling.
Prince of Peace® Ente

FANCL CORPORATION

7.2B02-001

Address: 日本 神奈川县-横滨市-中区山下町 89-1 Japan Kanagawa-Yokohama-89-1 Yamashita-cho, Naka-ku
Tel: +81 452261439
Email: fancloverseas@fancl.co.jp
Web: https://www.fancl.jp

FANCL Corporation是日本著名“无添加”护肤品及健康食品企业。
旗下的健康食品品牌FANCL Health Science用严格标准研发生产健康食品，追求消除世界的“不”：让不安变得安心，让不满变得满足，让不便变得便利。
FANCL Corporation is reputed in "Mutenka" Cosmetics and Health Supplements in Japan. The health supplements under the brand "FANCL Health Science" are sincerely developed with strict standard.
FANCL pursues to eliminate the "negatives" of the world by changing anxiety to comfort, dissatisfaction to satisfaction and inconvenient to convenient.

REX SERVICE PTY LTD

7.2B02-002

Address: 澳大利亚 Australia VIC3178-Melbourne-1/21 Kingsley close, rowville, VIC 3178
Tel: +61 3 97533447
Email: trade2@rexservice.com.au grant.li@rexgroup.net
Web:

REX SERVICE PTY LTD作为Dermaveen的品牌的经销商，旨在将优质的澳洲国民品牌带入中国。
REX SERVICE PTY LTD is the distributor of Dermaveen，and it will bring this excellent Australian national brand into Chinese market.

CARELINE AUSTRALIA PTY LTD

7.2B03-001

Address: 澳大利亚 新南威尔士-悉尼-41-43 Bellona Ave, Regents Park NSW 2143 Australia New South Wales-Sydney-41-43 Bellona Ave, Regents Park NSW 2143
Tel: 021-33130528
Email: 918622127@qq.com
Web:

澳大利亚柯蓝集团成立于20世纪80年代，发展至今日，成为一家以澳大利亚悉尼为基地集研发、生产、销售为一体的大型专业化集团公司。作为澳洲工业协会以及“澳洲制造”协会的会员，澳大利亚柯蓝集团于2002年在上海创立了澳柯保健品有限公司，引进了系列高品质保健品，并得到广大消费者的喜爱。澳大利亚柯蓝集团于2010年在上海成立柯蓝（上海）生物科技有限公司，并引进了香娜露儿系列护肤品。
Australian Careline Group was founded in the 1980s, and has developed into a large professional group company based in Sydney, Australia, which integrates R&D, production and sales.

Alticor Inc.

7.2B04-001

Address: 美国 United States of America Michigan-Ada-7575 Fulton St E
Tel: 020-85198198
Email: wanly.gu@amway.com
Web: www.amway.com

Amway was founded in 1959 by Rich DeVos and Jay Van Andel and revolutionized the business model known as direct selling. Our global footprint stretches across six continents with a presence in more than 100+ countries and territories.

阿尔法实验室(新西兰) / Alpha Laboratories (NZ) Ltd

7.2B07-001

Address: 新西兰 New Zealand Auckland-48 Crooks Road, East Tamaki
Tel: +649 5730866
Email: olivia.gao@alphawellness.co.nz
Web: www.alphalabs.co.nz

阿尔法实验室(新西兰)成立于1999年,如今已经发展成为南太平洋规模最大的保健食品研发生产基地。我们能够提供多种剂型的生产包括软胶囊、片剂、粉剂、营养软糖、口服液、婴幼儿配方奶粉、蜂蜜制品等等。我们的服务也包括产品研发生产及设计以及文件支持等,让您的品牌及产品在全球市场中脱颖而出。

Founded in 1999, Alpha Laboratories (NZ) Ltd is the largest nutraceutical contract manufacturing companies in New Zealand. Our products and services cover all dosage formats such as soft-gel, tablets, dairy, gummies and apiary products. Our health brand division distributes its products in the worldwide market.

Health Spring Australia Pty Ltd

7.2B08-002

Address: 澳大利亚 Australia 410 Oxford Street, Bondi Junction, NSW, 2022
Tel: 17621593775
Email: marketingdirector@enervite.com.cn
Web:

Health Spring Australia is an Australian owned, Australian based company specialising in natural health foods and supplements that can make a real difference to your health and wellbeing. Our focus is on identifying and using only natural ingredients that have proven effectiveness.

Swisse

7.2B05-001

Address: 澳大利亚 Australia VIC-Melbourne-111 Cambridge Street
Tel: 15857128876
Email: niepeng@hh.global
Web: www.swisse.com

Swisse is a leading natural health brand from Australia with a 50-year history. Swisse is Australia's market leader in vitamins and supplements, and is also available in China, New Zealand, Italy, Singapore, the U.K., U.S. and other regions. Swisse's product and approach is Premium, Proven, Aspirational and Engaging, inspiring millions of people around the world to live healthy and be happy.

CAC Natural Foods Inc

7.2B07-002

Address: 加拿大 Canada BC-Burnaby-619-4538 Kingsway
Tel: +1(778)3797730
Email: yangran@cacnaturals.com
Web:

CAC Natural Foods Inc., a wholly-owned company under CAC Enterprises Group, specializes in cross-border e-commerce business. In July 2015, CAC Enterprises Group and the Factors Group reached a strategic cooperation, and hoped to bring the world-renowned health products "webber naturals" to consumers in China together.

BLACKMORES澳佳宝 / BLACKMORES

7.2B06-001

Address: 澳大利亚 Australia NSW-Sydney-20 Jubilee Avenue, Warriewood
Tel: 021-62650677
Email: yoyo.xu@blackmores.com.cn
Web: www.blackmores.com.au

BLACKMORES澳佳宝是澳大利亚领先的天然营养品公司,致力于为消费者提供安全、高品质的膳食营养补充剂、婴幼儿奶粉、护肤品和健康咨询服务。自1932年成立至今,BLACKMORES澳佳宝的业务已发展至新加坡、日本、马来西亚及中国等17个市场,拥有逾千名员工。

BLACKMORES is Australia's leading natural health company that is committed to providing its customers with safe, high-quality nutritional supplements, infant formula, skincare products, and health advisory service.

Founded in 1932, BLACKMORES nowadays operates in 17 markets around the world, including Australia, New Zealand, Cambodia, Malaysia, Singapore, and China with over 1000 employees.

Herbalife Nutrition

7.2B08-001

Address: 美国 United States of America Los Angeles-Los Angeles-800 West Olympic Blvd, Suite 406
Tel: 010-57611777-3096
Email: lipingm@herbalife.com
Web: https://www.herbalife.cn

Herbalife Nutrition is a global nutrition company, listed in New York Exchange Maket, whose purpose is to make the world healthier and happier. Our mission for nutrition is changing and enriching people's lives with great nutrition products & programs - since 1980. Our targeted nutrition, weight management, energy and fitness products are available in over 90 countries/ regions.

* The deadline for information submission is 24:00, September 20. All information shall be provided and filled in by the exhibitors and the operating agencies. The Organizers bear no liability for any errors or mistakes in the information.

* 信息截止到北京时间9月20日24:00,所有信息均为参展商及组展机构自行提供及填报。若有错误,承办单位概不负责。

医疗器械及医药保健展区
MEDICAL EQUIPMENT & HEALTHCARE PRODUCTS
7.1/7.2 馆 Hall

食品及农产品展区
FOOD & AGRICULTURAL PRODUCTS

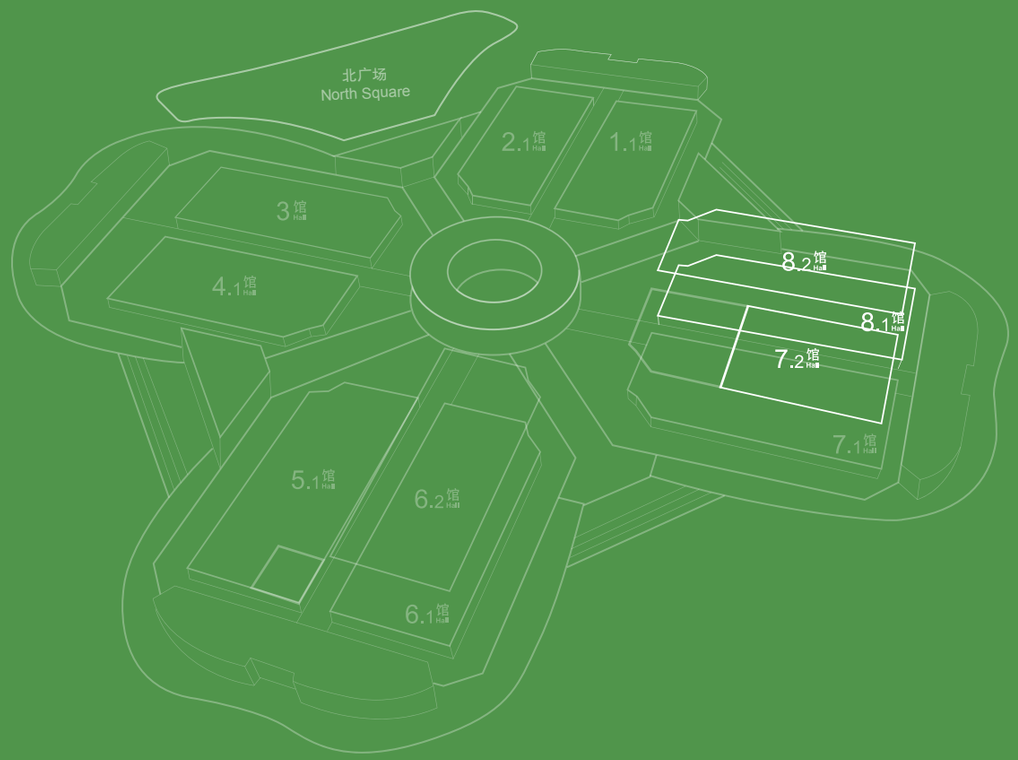

7.2/8.1/8.2馆 Hall ▸▸

FRENCH BELLE'S FAMILY WINERY CO., LTD

7.2B1-12

Address: 法国 France 14RUE CHARLES V, 75004 PARIS
Tel: 021-61763998
Email: 3244184574@qq.com
Web:

The French Bellis family is a long-established wine family. With the development of wine, sweet sparkling wine has become an important branch of wine, inheriting the family wine culture, and the Bellis family's outstanding successor Moore. Bellis has created a family-named wine brand and will make a sweet sparkling wine. As the brand's flagship product.

MAISON LE STAR VIGNOBLES & CHATEAUX

7.2B1-13

Address: 法国 France PINEUILH-ZAE DE L'ARBALESTRIER-BP43-33220
Tel: 021-62595717
Email: louisli@haiyaoholdings.com
Web: www.maisonlestar.com

Maison Le Star is Founded in 2016, managed by the wine enthusiast and entrepreneur from the luxury goods industry -- Guillaume Brochard. Maison Le Star is built through the acquisition of 2 long established merchant companies (1972 and 1976) and their related châteaux. Now Maison Le Star owns 7 historical Bordeaux Chateau. Its global business involves over 600 hectares' vineyards.

AUSTRALIA FENGHE PTY LTD

7.2B1-14

Address: 澳大利亚 Australia VIC-BALWYN NORTH-7 SUNBURST AVE
Tel: +61 424 645 688
Email: FENGHE5158@GMAIL.COM
Web:

澳洲丰禾贸易有限公司是成立于2016年，由旅居澳洲华侨吴建军先生投资并创立的一家以葡萄酒作为主营业务的品牌酒业贸易公司，公司位于南澳主要产区，致力于澳大利亚著名酿酒家族的优质葡萄酒以及文化的推广，所售酒品均采购自实力雄厚、品质卓越的葡萄酒公司并直接原装原瓶进口，并通过努力至今一直保持良好的增长，主要产品在国内同类竞品中最具档次、品质最好、价格最实惠。

Australia Fenghe Pty Ltd was founded in 2016 and it is a company invested and started by Chinese Australian, Mr Jianjun Wu, with a focus on branded wine trading business. The company is located in the main wine-producing region of South Australia and dedicated to promotion of premium wines from renown winemaking families in Australia as well as wine culture.

SAFORD WINES PTY LTD

7.2B1-15

Address: 澳大利亚 Australia Adelaide-southern Australia.-18 YARALINDA ST, DERNANCOURT SA 5075
Tel: 0451 650 315
Email: baoyisafordwines@gmail.com
Web: www.saford.com.au

The company is headquartered in Adelaide, southern Australia.Saford Company is a red wine company with rich experience in market operation, which integrates the cultivation, production, research and development of red wine raw materials, and direct promotion.

UN CINTURON UNA RUTA PERU PROGRESSO S.A.C.

7.2B1-16

Address: 秘鲁 Peru LIMA-LIMA-JR. TOMAS GUIDO 116 LINCE LIMA PERU
Tel: 021-58854937
Email: dillontu@shanghaiallwell.com
Web:

UN CINTURON UNA RUTA PERU PROGRESSO S.A.C. IS A COMPANY WHICH REGISTRATED IN LIMA. WE ARE DOING BUSINESS WITH CHINA,SOUTH AMERICA, EUROPE FOR A LONG TIME. OUR MAIN PRODUCTS ARE RED WINE, PLANT SEEDS AND COFFEE BEANS.Taking "the good faith management, the continuous prestige first" as the tenet, we have established good prestige among the domestic and foreign customers.

金浦西班牙食品产业发展有限公司. / GPRO SPAIN INDUSTRIA DE DESARROLLO ALIMENTARIO, S.L.

7.2B1-17

Address: 西班牙 巴利阿里-帕尔马-C./Frances Vidal y Suerda No.23 Spain Illes Baleares-Palma-C./Frances Vidal y Suerda No.23
Tel: 025-83799661
Email: jose_wei@163.com
Web: www.fincacapilladelfraile.com/es

金浦西班牙食品产业发展有限公司（GPRO SPAIN INDUSTRIA DE DESARROLLO ALIMENTARIO, S.L.）为金浦集团于2017年12月底在西班牙成立的全资子公司公司资产为占地150公顷的西班牙农庄（其中橄榄园占地85公顷，葡萄园占地12.58公顷），年产葡萄酒10万瓶，特级初榨橄榄油10万瓶，产品大部分出口中国、俄罗斯、台湾地区及美国及东欧地区，深受广大消费者青睐。

GPRO SPAIN INDUSTRIA was invested by GPRO, established in December 2017 in SPAIN, its subsidiary asset wholly owned by her is the farm which covers 150 hectares (including olive garden of 85 hectares, vineyard of 12.58 hec.), with an annual output of 100,000 bottles of wine, Extra Virgin Olive Oil also the same.

海恩勒葡萄酒庄园有限公司 / Hainle Vineyards Estate Winery Ltd.

7.2B1-18

Address: 加拿大 Canada BC-Peachland-5355 Trenpanier Bench Road
Tel: 250-767-2525
Email: bellah@hainle.com
Web: hainle.com

海恩勒酒庄位于加拿大卑诗省的著名水果之乡欧垦娜根山谷，是加拿大著名的葡萄产区。高纬度、独特的地理位置及气候条件，造就了北美品质优异的黑皮诺及雷司令等葡萄品种，酿造出适合陈年的高品质有机葡萄酒，非常具有收藏价值。

Hainle Vineyards Estate Winery Ltd. is located in the Okanagan Valley which is a famous fruit growing region of British Columbia & also a famous grape producing region in Canada. High latitudes, unique geographical locations & climatic conditions have achieved North American grape varieties with excellent quality & high-quality organic wines suitable for aging which have a great collective value.

MAISON BOUEY

7.2B1-19

Address: 法国 France AMBARES-Templiers-1, Rue de la Commanderie des Templiers 33440 AMBARES France
Tel: 33-556775071 / 0033556775071
Email: Bouey.export@maisonboury.fr Bouey.export@maisonbouey.fr
Web: www.maisonbouey.fr

法国宝悦世家始于1821年，与多家酒庄合作紧密，是法各超市的主供货商。收购力宝庄园等一批中级明星庄，聘斯蒂芬•德农酿酒，屡获各类大赛奖项。建造了集生产、罐装、仓储、贸易为一体的新办公楼，做到了真正全程可控。

Maison Bouey began in 1821, and cooperated closely with many wineries. It is the main supplier of French supermarkets. Acquisition of Chateau LA RIBAUD and other star CRU Chateau, hired Stephane Derenoncourt brew wine. A new office building has been built, which can be controll in the whole process.

VINA ERRAZURIZ S.A.

7.2B1-20

Address: 智利 Chile T Sur-T Sur-Av. N.Tajamar 481 Of.503 T Sur
Tel: 02160325129
Email: gregjiang@icloud.com
Web: www.errazuriz.com

Don Maximiano Errazuriz founded Vina Errazuriz in 1870 in the Aconcagua Valley. 65 miles north of the capital, Santiago. Recognizing that this valley, with its hot, dry summers and cool Pacific Ocean Breezes, was ideal for growing grapes. Don Maximiano sent for the finest clones from France and with tenacity and perseverance transformed this barren land into a world-class vineyard.

SCEA LAVIGNE VERON

7.2B1-21

Address: 法国 France Maine et Loire-Varrains-15, rue des Rogelins 49400 Varrains
Tel: 13429231646
Email: zhiyaoma2000@yahoo.fr
Web:

我们的葡萄酒庄坐落于法国的卢瓦河谷产区，葡萄种植面积超过42公顷。在法国是AOP法定产区的独立酿酒酒庄。从葡萄种植到装瓶全部在酒庄内完成后原瓶出口至中国、美国及英国等国家。酒庄在产区当地以拥有60年树龄的老藤葡萄树而著名。此次展会带来了卢瓦河谷贵腐甜白，及多年连续获得法国吉伯特&盖拉德评比金奖的老藤干红葡萄酒。期待您来我们的展位品尝（展位号7.2B1-21）。
Our winery is located in the Loire Valley region of France. We complete all the production processes from grape planting to bottling. We'll bring to The exhibition the sweet Noble Rot Wines and Old vine wine, the "Vieille Vigne" for tasting. We look forward to seeing you at our booth (booth number 7.2B1-21).

BODEGAS Y VINEDOS MARTUELA, S.L.

7.2B1-22

Address: 西班牙 Spain Compo de la Guardia,s/n-45760-La Guardua(Toledo)-ESPANA
Tel: 18621833662
Email: 505798311@qq.com
Web:

马图酒庄为西班牙仅有的14家VINO DE PAGO DO 级别的其中之一家。必须使用自家庄园种植的葡萄来酿酒并在本身的庄园内装瓶，为满足西班牙农业部门的规定，每年在采收期间每天都有2名监察人员在葡萄园内巡查以确保所有葡萄都来自本身的庄园。每年还需缴纳大约7万欧元的管理费用。
Martúe is one of 14 VINO DE PAGO DO estates in Spain. One of the qualifications required to be a Vino de Pago winery is we can only use estate grown grapes from our own vineyard. We focus on making consistent, world class wines.Starting in 2018 we began releasing a very special wine for the China market, known as ilixii. This wine uses the well known Chinese horoscope concept.

GIRONDE ET GASCOGNE

7.2B1-23

Address: 法国 France Gironde-Les Salles de Castillon-Château de Belcier, 33350
Tel: 0033 557564040
Email: arga1219@gmail.com
hdurandgg@wanadoo.fr
Web: www.gironde-et-gascogne.com

We produce 3 outstanding wines in the Bordeaux region of France: "Château Ramage La Batisse" and "Château Tourteran": both AOC Haut-Médoc Cru Bourgeois, on the left bank, near Pauillac and its famous Crus Classés. "Château de Belcier": AOC Castillon Côtes de Bordeaux, on the right bank, near Saint-Emilion. We also produce Bordeaux Supérieur, "rosé" wine and we sell "Bordeaux crus classés"

璀璨新西兰有限公司 / Trisan New Zealand Limited

7.2B2-05

Address: 新西兰 New Zealand Auckland-Auckland-L3, 156 Parnell Road Parnell
Tel: 0064 9 3666888
Email: joy.zhai@trisan.co.nz
Web: www.trisan.co.nz

Trisan为世界酒业联盟常务理事单位。公司涉及业务咨询顾问，为境外各酒庄在中国境内的活动提供各方面服务,主要包括提供出口产品意见咨询服务、出口跨境物流、检验检疫政策咨询及相关服务，并可提供产品上架中国知名线上和线下平台。
The core business of Trisan New Zealand Limited is to provide one-stop cross-border business consulting services to NZ business who want to market their products or services to China, including every aspect of logistics, marketing and sales.

SBC BENOIT CHAPELLE

7.2B2-03

Address: 法国 France 12, Boulevard Jules Ferry, Beaune, France
Tel: 8621-63029108
Email: ljb@sh-chaban.com
Web: www.lacomedieduvin.fr

Company Benoit Chapelle is a winemaker based in Beaune, Burgundy. Our product brand has a series of independent brands "Benoit Chapelle" and cooperates with many domaines in the region. Our main sales target is CHR in France, a small part of which is exported to Asia.

SARL CELLIER DES CHARMETTES

7.2B2-04

Address: 法国 France S.A.R.L.LE CELLIER DES CHARMETTES-33570 LES ARTIGUES DE LUSSAC
Tel: +33557555799
Email: trocard@wanadoo.fr
Web: www.trocard.com

Founded by the Trocard family, the Trocard family has been making wines in premium vineyards in the Saint-Emilion and (Pomerol) regions of Libournais for 14 generations since 1620. In 1945, Jean Trocard showed great talent for wine making, and the winery gradually developed under his management.

L'ISBERIE

7.2B2-06

Address: 法国 France PARIS-PARIS-86 RUE BARON LEROY
Tel: 0086 511 85725137
Email: 1392489555@qq.com
Web: www.isberie.fr

法国L' ISBERIE爱丝百瑞葡萄酒公司，创始于1919年的葡萄酒文化的传人，承载近百年历史却不忘初衷，专注自身领域，倾听您的需求，自始如一孜孜不倦为您提供最优质的服务，百年品牌，价值品鉴。作为一家巴黎老牌酒商，L' ISBERIE承载近百年历史却不忘初衷，自始如一孜孜不倦为您提供最优质的服务。
SOCIETE L'ISBERIE FRANCE ,founded in 1919, is a descendant of wine culture. It has a history of nearly 100 years, the company focus on its own field, listen to you required, and provide you the best service, hundred years brand, value tasting.

CBC BELGIUM BVBA

7.2B2-07

Address: 比利时 Belgium NEERBROEK 95 2070 ZWIJNDRECHT BELGIEM
Tel: 13910009063
Email: joezhuwei@gmail.com
Web: www.cbcbelgium.com

CBC,是一家专业 并且分享比利时生活方式超过40年的公司。如今我们向全球的合作伙伴介绍比利时啤酒和其他优质食品。
CBC is a professional company which has been sharing Belgian lifestyle for more than 40 years. Furthermore, nowadays we also introduce other Belgian high-quality products to our partners worldwide。

Drayton Fong's Family Winery Pty Ltd

7.2B2-08

Address: 澳大利亚 Australia NSW-Pokolbin-555 Oakley Creek Road
Tel: (612) 97500029
Email: enquiries@dfwinery.com.au
Web:

The Drayton family established the winery in 1853 and are now into their 6th generation, with over 160 years in the wine industry. The winery is located close to Sydney, in the Hunter Valley. Drayton's and the Fong's family have joint ventured to establish Drayton Fong's Family Winery Pty Ltd, which specialises in researching and developing wine suited to the Asian palate.

法国波尔多黄金马酒商 / SAS CHEVAL DOR

7.2B2-09

Address: 法国 吉伦特省-波尔多市-12号 鲁西坦路 33760 塔尔贡 France 12 CHEMIN DE ROUSTAING,33760 TARGON,FRANCE
Tel: 0033（0556236655）
Email: kiang.dm@hotmail.com
Kingsoft-wps@wps.cn
Web:

法国黄金马有限公司成立于2013年，主要从事葡萄酒进出口业务，公司拥有自己的酒庄，位于法国波尔多两岸之间，出产的葡萄酒深受葡萄酒专业人士的认可。公司以具有竞争力的价格向中国消费者提供高品质以及获得奖章的法国葡萄酒，我们与法国酒庄紧密相连，这使我们能够为顾客提供法国进口葡萄酒业务的全方位服务。
Founded in 2013, sas cheval d`or Co., Ltd. is mainly engaged in wine import and export business. The company owns its own winery and is located between the two sides of Bordeaux, France. The wines produced are highly recognized by wine professionals. The company offers high quality and medal-winning French wines to Chinese consumers at prices. We are closely connected to French wineries.

3 Oceans Wine Company

7.2B2-10

Address: 澳大利亚 Australia Western Australia-Perth-8141 Bussell Hwy, Metricup WA 6280
Tel: 022-59835091
Email: chengcongai@3oceans.com.cn
Web: www.3oceans.com.cn

澳洲三洋葡萄酒业有限公司总部位于西澳洲首府佩斯，拥有柏兰爵庄园（Palandri Vineyard）、伟尔克斯酒庄（Wilkes Vineyard）两大葡萄庄园，分别分布在玛格利特河产区（Margaret River）和法兰克兰河产区（Frankland River），总占地6500余亩，年产优质葡萄汁4000余吨。
3 Oceans Wine Company (3OWC) is a premium wine producer and exporter based in WA. With more than 70 years of history under the Palandri Winery name, 3OWC has a land area of 433 hectares and is capable of processing more than 4,000 tonnes of premium wine juice per year, which ranks it as one of the best-known large-scale wineries in WA.

Enoitalia s.p.a.

7.2B3-02(01)

Address: 意大利 Italy 37011 Calmasino di Bardolino Verona - Italia Verona
Tel: 021-52301199-828
Email: 2651886476@qq.com
Web: www.enoitalia.it

Enoitalia is the largest privately owned winery in Italy in terms of production, and one of the top ten in the country. A top producer in Italy in terms of volume with 97 mln bottles*. A wide range of Italian wines and a major partner for International on and off trade chains.

柯莱酒庄 / VINA KOYLE S.A.

7.2B3-02(04)

Address: 智利 Chile Santiago-Santiago-Lsidora Goyenecha 3600 OF 1101 Las Condes, Santiago, Chile.
Tel: 021-68865577
Email: 784430428@qq.com
Web: www.shzp99.com

ViñaKoyle葡萄园种植在安第斯山脉脚下的洛格林斯，Alto Colchagua的岩石坡上。ViñaKoyle的承诺是开发一个独特的葡萄酒项目，将作为生物动力农业的基准，酒庄认为这是获得最佳原产地的健康葡萄的最佳方式。酒庄葡萄酒由Demeter（生物动力学），Ecocert（有机），非转基因（未转基因）和“素食社会”的素食印章认证。
The ViñaKoyle vineyard in Alto Colchagua Andes.ViñaKoyle's commitment is to develop a unique wine project that will serve as a benchmark for biodynamic agriculture, which the winery considers to be the best way to get the best grapes for the best origin.Winery wines are certified by Demeter (Biodynamics), Ecocert (Organic), Non-GMO (non-GMO) and Vegetarian Vegetarian Seals.

法密怡-法国酒FAMILLE / FAMILLE

7.2B3-02(02)

Address: 法国 France 4 Rue Albert Einstein, 78370 Plaisir, FRANCE
Tel: 13616364967
Email: famiyi@hotmail.com
Web: www.famiyi.com

法密怡-法国酒FAMILLE是一家专业的法国葡萄酒品牌商，精选法国各产区、各等级、各类型、质价匹配的经典法国葡萄酒，同时，还提供专业丰富通俗易懂的葡萄酒知识，让大家在短时间内学会辨别法国葡萄酒的真伪，区分法国葡萄酒的等级。
FAMILLE DUBOIS DISTRIBUTION is a traditional family winery based in Bordeaux. It cooperates with FAMIYI INTERNATIONAL CO., LTD in the Chinese market. We sell not only wines from Bordeaux, but also wines of all grades and types from all wine regions in France. We will always guarantee provenance and our wine expert team will always be availble for personalized wine advice.

ERX GROUP PTY. LTD.

7.2B3-02(03)

Address: 澳大利亚 Australia South Australia-Adelaide-Level 2, 68 Grenfell Street
Tel: +86 574 86819269
Email: xuxing@jewelthronewine.com
Web:

ERX GROUP is located in Adelaide. Winery has a unique geographical advantage, we directly select excellent grapes. ERX GROUP has a complete Australian wine supply chain, providing professional wine exports. Over the years, we have been committed to providing high quality and cost-effective wines to Australia, China and Europe. ERX GROUP's products include READER，BUTTERFLY ESTATE，LAFORD, etc.

Australia Wine Legend Group Pty Ltd

7.2B3-02(07)

Address: 澳大利亚 VIC-Mount Waverley-Unit 23/ 105-111 Ricketts Road, Australia VICTORIA-Mount Waverley-Unit 23/ 105-111 Ricketts Road,
Tel: +86 13912135888
Email: 707155187@qq.com
Web:

澳洲传奇酒业从2006年进入澳洲，澳洲传奇酒业在几年的摸索和测试之后，最终选定The Wine Group Loxton（简称TWG）作为我们澳洲葡萄酒的生产基地。众所周知好酒来自优质的葡萄果实。中心的地理位置为收购选择东南澳大利亚所有产区的优质葡萄带来了便利。与TWG合作的所有葡萄园都经过仔细的挑选，葡萄采摘前也会经过严格检查。这正是产品质量优质稳定的基础。
Australia Wine Legend Group Pty Ltd entered Australia in 2006. After several years of exploration and testing, the Australian legendary wine industry finally selected The Wine Group Loxton (TWG) as our Australian wine production base. It is well known that good wine comes from high quality grape fruit. The location of the centre facilitates the acquisition of quality grapes from all regions of SA.

Montaribaldi srl

7.2B3-02(05)

Address: 意大利 Italy Cuneo-Barbaresco-Strada Nicolini Alto, 12
Tel: 18301232240
Email: info@proitalywine.com
Web: www.montaribaldi.com

蒙大维巴迪酒庄位于意大利西北部皮埃蒙特产区，生产意大利代表性的高品质干红，干白，起泡葡萄酒。酒庄为家族式企业，有着悠久的文化历史及精湛酿造工艺的传承。“用葡萄酒的风格诠释我们脚下的这片意大利的风土”成为酒庄的宗旨。为消费市场提供高性价比的葡萄酒是我们直追求的目标。
Montaribaldi is located in the Piemont region of Northwest Italy. It produces the representative Italian dry red, white and sparkling wines. The winery is a family-owned enterprise with a long cultural history and the inheritance of exquisite brewing technology. The purpose of the winery is to interpret the Italian soil under our feet in the style of wine.

VIGNOBLES DUBOIS ET FILS E.A.R.L

7.2B3-02(06)

Address: 法国 France 4 Rue Albert Einstein, 78370 Plaisir, FRANCE
Tel: 0033631139780
Email: famiyi@hotmail.com
Web: www.famiyi.com

贝特兰酒庄是波尔多一家传统的家族酒庄，在中国市场与法密怡-法国酒合作，我们不仅销售波尔多产区，还有各产区各等级各类型的法国葡萄酒。我们严格保障产品质量，同时我们专业的葡萄酒团队将帮助您选择质价匹配的、适合的法国葡萄酒。
VIGNOBLES DUBOIS ET FILS E.A.R.L is a traditional family winery based in Bordeaux. It cooperates with FAMIYI INTERNATIONAL CO., LTD in the Chinese market. We sell not only wines from Bordeaux, but also wines of all grades and types from all wine regions in France. We will always guarantee provenance and our wine expert team will always be availble for personalized wine advice.

瑞福斯酒业 / AC Smart Link Pty Ltd.

7.2B3-02(08)

Address: 澳大利亚 Australia Victoria-Mount Waverley-Unit 18, 21-35 Ricketts Road
Tel: +61 3 8510 6061
Email: ryan@ac-smartlink.com
Web: 45.32.247.235

Riversdale Fine Wines has been devoted to Australian wine for over 30 years, founded in Australia 's cosmopolitan and culinary capital, Melbourne. At Riversdale Fine Wines, we believe it is our commitment to professionalism that drives quality and value for our customers.

FRENCH CORNER SARL

7.2B3-02(09)

Address: 法国 纪龙德-波尔多-9 place Gambetta 33110 LE BOUSCAT France Gironde-Bordeaux-9,place Gambetta 33110 LE BOUSCAT
Tel: 15657190919 15657190919
Email: 307948734@qq.com
Web:

FRENCH CORNER在中国推广真正的法国酒。我们提供来自勃艮第，博若莱，夏布利，罗讷河谷，波尔多，XO白兰地的独家葡萄酒。所有报价均由生产商提供。我们将在法国和中国之间建立一个桥梁，让中国客户喝到最好的法国葡萄酒和合理的价格。我们很高兴在中国分享法国文化。
FRENCH CORNER PROMOTE REAL FRENCH WINERY IN CHINA. WE OFFER EXCLUSIVE WINE FROM BURGUNDY, BEAUJOLAIS, CHABLIS, RHONE VALLEY, BORDEAUX, XO LIQUOR FROM COGNAC.

博赛图酒业有限公司 / AUSTRALIA BOSOTUM WINERY PTY LTD

7.2B3-02(10)

Address: 澳大利亚 维多利亚省-贸文东区伯克街15号-澳大利亚维多利亚省贸文东区伯克街15号 Australia Victoria-15 BURKE RD MALVERN EAST VIC 3145-15 BURKE RD MALVERN EAST VIC 3145 AUSTRALIA
Tel: 13723980703
Email: 910687841@qq.com
Web:

博赛图·迈岭酒庄位于澳大利亚最著名的产区巴罗萨谷(barossa valley)。巴罗萨谷是澳大利亚最古老最著名的产区，这里以出产浓郁强健的西拉葡萄酒而闻名天下，澳洲很多著名的酒庄都位于此。博赛图.迈岭酒庄就位于巴罗萨谷最核心的区域。
Bosotum milhing wines is located in one of Australia's most famous wine regions, the barossa valley. Barossa valley is the oldest and most famous wine region in Australia.

CASTELLANI S.P.A

7.2B3-02(11)

Address: 意大利 Italy PISA-Pontedera-Via del Popolo 90E, Frazione Santa Lucia
Tel: +39 0587 292900
Email: china@castelwine.com
Web: www.castelwine.com

Since 1903 our finest Estate wines was exported the word from Tuscany. Our philosophy has remained consistent: "The quality of the wine begins in the vineyard", as my ancestors used to say. Today our aim & aspiration have always been to create memorable wines. This is the reason why our work has been so passionate, investing in research and new cellar technologies.” Piergiorgio Castellani.

戴维娜酒庄 / DALVINA DOOEL

7.2B3-02(12)

Address: 马其顿 Macedonia Strumica-Bosilovo-s.Hamzali,2431
Tel: 021-50200767
Email: dalvina@dalvinachina.com
Web: www.dalvinachina.com

our vineyards and winery are located near the city of Strumica,southeast Macedonia,in the Strumichko-Radoviski wine region.That is famous valley of the Struma and Strumeshnica rivers.The valley has Mediterranean climate.

芳堤娜酒庄农业开发有限责任公司 / EARL DU CHATEAU FRONTENAC

7.2B3-02(13)

Address: 法国 吉伦特-皮纳伊-雷曼够 France Gironde-Pineuilh-Les Mingauds
Tel: 0557461659
Email: 194707394@qq.com
Web: www.bordeaux-frontenac.com

酒庄位于波尔多吉伦特河右岸，葡萄园占地约30公顷，1.14公顷为白葡萄，其余为红葡萄。种植密度为每公顷5000株。产区为 SAINTE FOY BORDEAUX，，平均年产量为20万瓶。
The winery is located on the right bank of the Gillent River in Bordeaux. The vineyard covers an area of about 30 hectares, with 1.14 hectares of white grapes and the rest of red grapes. The planting density is 5000 plants per hectare. The production area is SAINTE FOY BORDEAUX, with an average annual output of 200,000 bottles.

SV CLUB

7.2B3-02(14)

Address: 法国 France 73 Rue Rateau 93120 La Courneuve
Tel: 862162269096
Email: mike.shen@pinjiuhui.com
Web: www.pinjiuhui.com

More than1,000 containers of imported wine products from China were awarded the Knight of the Left Bank of Bordeaux.Our products were displayed at the first Expo in 2018.

Ulupna Winery

7.2B3-02(15)

Address: 澳大利亚 Victoria 3004-ALBACETE-Suite 107, 620 St.Kilda Road, Melbourne Australia Victoria-Melbourne-Suit 107,620 St.Kilda road
Tel: 3 9533 8831 / 3 9533 8831
Email: viviana@ulupnawinery.com.au
Web: www.ulupnawinery.com.au

Ulupna Winery is the unique UW brand promoter and national and international wholesaler of Ulupna wines. Ulupna Winery is a family business that was born out of love for the land.

Diamond Estates Wines and Spirits Ltd.

7.2B3-02(16)

Address: 加拿大 安大略省-尼亚加拉市-尼亚加拉滨湖小镇，尼亚加拉stone路1067号 Canada Ontario-Niagara on the Lake-1067 Niagara Stone Road
Tel: 905-6411042
Email: ptoms@diamondwines.com
Web: ptoms@diamondwines.com www.lakeviewwineco.ca

Diamond Estates Wines and Spirits Inc.是一家上市公司，我们酒庄采用最先进的计算机控制设备以及多年的酿酒经验酿制出很多获奖的VQA葡萄酒。凭借1000,000平方英尺的生产空间和超过500万升的酿酒桶，我们能够酿制大量优质葡萄酒，并随时可根据需要进一步扩展。我们已经出口红酒到中国多年。
Diamond Estates Wines and Spirits Inc. is a publicly traded company using state-of-the-art computer-controlled machinery along with years of winemaking experience to produce award winning VQA wines. With 1000,000 sq. ft of production space and over 5 million liters of cooperage, Diamond is well equipped to handle large volume wine production. Diamond has exported to China for years.

VIGNOBLES CARREAU SELECTION SARL

7.2B3-02(17)

Address: 法国 France Aquitaine- Cars-Château les petits arnauds 33390
Tel: 0756-6901828
Email: 123860346@qq.com
Web:

Since 1832, 7 generations have managed with success the winery. Today, Sébastien and Nicolas Carreau are in charge of 8 Châteaux and 82 hectares of vines.

FINCA MANZANARES

7.2B3-02(18)

Address: 西班牙 Spain ALBACETE-ALBACETE-C/ VIRGEN DEL PILAR 53 BAJO
Tel: +349677619619
Email: fincamanzanarfes@vinospalarea.com
Web: www.vinospalarea.com

FINCA MANZANARES es una bodega familiar ubicada en pleno corazón de la Mancha (España), donde se elabora un vino de alta calidad, debido a su terreno de cultivo rodeado de plantas aromaticas'con variedades de Cabernet Sauvignon, Syrah y Merlot.

Schenk Italia S.p.A

7.2B3-02(19)

Address: 意大利 Italy Via Stazione n.43
Tel: 010-65581869
Email: w371728017@163.com
Web: www.schenkitalia.it

SCHENK was founded in Switzerland in 1893. Over a century after its creation, SCHENK now has holdings in Switzerland, France, Italy, Spain, Germany, Benelux and in the UK. The scope of our activities covers every single aspect of the wine trade, from vineyard management to direct sales.

GOLFLEE WINE PTY LTD

7.2B3-02(20)

Address: 澳大利亚 Australia SOUTH AUSTRALIA-CAMPBELLTOWN-78 CRESDEE ROAD
Tel: +086 21-60520317
Email: zoel@golflee.com.au
Web:

Golflee Wine is located in South Australia. Our wines are made from famous wine-producing regions such as McLaren Vale, Barossa Valley, Adelaide Hills, Clare Valley and Coonawarra. Our wines range from entry level to premium, including Syrah, Cabernet Sauvignon, Chardonnay, Riesling, Semillon, Merlot, Pinot Noir, Mourvedre, Grenache and other varieties.

BODEGAS RODERO,S.L

7.2B3-02(21)

Address: 西班牙 Spain BURGOS-09314 PEDROSA DE DUERO-. DE BOADA, S/N 09314 PEDROSA DE DUERO
Tel: 021-60513550
Email: 328245678@qq.com
Web: www.kinginternational.com

BODEGAS RODERO, S.L公司成立于1980年，以西班牙，法国及澳洲的葡萄酒 白兰地为主要产品，销往欧美各地及东南亚国家，年产值 进出口总额达10亿美元,先依托欧美 西班牙,立足上海拓展全中国。

Mauosen S.L.

7.2B3-02(22)

Address: 西班牙 Spain Madrid-Mauosen s.l. Calle treviana n3 piso 11-D
Tel: +34 911 265 566
Email: 809010672@qq.com sheren518@hotmail.com
Web:

The company not only sells and exports wine, olive oil and other Spanish products. It also produces and organizes advanced customized experience tours.This will enable Chinese consumers to understand the concept of Mediterranean life in all aspects, away from foreign tourists to superficial tourism.Spain has the best wine in the world, the best extra virgin olive oil in the world.

Plaimont

7.2B3-02(23)

Address: 法国 France Gers-Saint Mont-32400 Saint-Mont
Tel: 0756-2233850
Email: justin@zuco.com.cn
Web: www.plaimont.com

98% of the Saint Mont appellation (red, white and rosé), 55% of the Madiran appellation and Pacherenc du Vic-Bilh appellation and almost half of the Côtes de Gascogne PGI. Plaimont has become a leader in wines from South West France over just a few decades.

REILLYS WINES

7.2B3-02(24)

Address: 澳大利亚 Australia SA-Kent Town-PO BOX 374
Tel: 0756-2233850
Email: justin@zuco.com.cn
Web: www.reillyswines.com.au

With a background in pharmacy and medicine, owner and winemaker Justin Ardill saw an opportunity to indulge his passion for wine by purchasing a small parcel of 12 acres of vineyards in Watervale in 1993. Along with these vineyards, he and wife Julie purchased a humble cottage to be their cellar door and winery on the main street of Mintaro known simply as Reilly's Cottage.

法国百特酒业集团 / GROUPE BELEDEN SAS

7.2B3-02(25)

Address: 法国 波尔多-巴尔萨克 France BORDEAUX-Chateau Barateau, 33112 Saint Laurent du Medoc
Tel: 138 0818 0825
Email: chenbo@beleden.com
Web: www.beleden.com

Bel Eden法国百特酒业集团，成立于1976年，是一家由中资控股，专业从事葡萄酒酿造与贸易的法国企业，总部位于波尔多的梅多克。旗下有巴亚图和拉复两家优秀的士族名庄，皆位于上梅多克产区，这里集中了拉菲、玛歌等全世界最著名的酒庄。百特品牌酒生产中心位于波尔多的南部，目前是法国唯一中资控股的品牌酒生产中心，年生产能力超过1200万瓶。我们坚持“产销一体”的经营理念，将产品推向全世界。
Fondée en 1976, BEL EDEN est une société située à Saint-Laurent, Médoc.Elle possède plusieurs propriétés renommées, et est spécialisée dans la vinification et le négoce viticole.BEL EDEN propose des vins des meilleures régions viticoles françaises : Bordeaux, Bourgogne, Languedoc, Vallée du Rhône, Alsace Bel Eden，Montre les saveurs de France au monde.

澳洲大陆酒业集团 / AUS-CONTINENT WINE GROUP

7.2B3-02(26)

Address: 澳大利亚 南澳大利亚州吉尔伯恩区邱奇路6/387 Australia South Australia-Adelaide-Unit 6/387 Churchill Rd, Kilburn SA
Tel: +61426019999
Email: 707e@163.com
Web: www.wine-aus.com

Aus Continent Wine Group is expending fast. Aus Continent Wine Group was established in South Australia, which is one of the best wine regions in the world. It has good resources in wineries, vineyard, wine making and bottling line all together.

香港华远万通国际贸易有限公司 / HongKong Vinternet International Trading Co., Limited

7.2B3-03

Address: 香港地区 HongKong China RM 1502(38) EASEY COMM BLDG 253-261 HENNESSY RD WANCHAI HK
Tel: 010-87487088
Email: mabijie@wajiu.com
Web:

香港华远万通国际贸易有限公司，是集酒庄、品牌、名庄、原浆、贸易于一身的集团公司，在法国和澳大利亚分别设有多个子公司，旗下澳洲子公司出口量占据澳洲前三，也是南澳洲最大的原浆控制者和供货商。整个公司直接或间接控制或全权代表全球百家以上酒庄，业务范围遍及世界各国，每年向中国出口近1000万升葡萄酒。

Hong Kong Vinternet International Trading Co., Ltd. is a group of companies and wineries situated in Australia and France. Its Australian subsidiary company is of the top three of Australia's exporters by volume and the largest bulk wine controller and supplier in South Australia.

勃西城堡酒庄 / SARL CHAMP DONG CREATIONS INDUSTRIES

7.2B3-04

Address: 法国 VAUCLUSE-CAMARET-SUR-AIGUES-148, CHEMIN D'AVIGNON France CAMARET-SUR-AIGUES-148, CHEMIN D'AVIGNON
Tel: 0033658138862
Email: chateau.bouche@gmail.com
Web: www.chateau-bouche.fr

勃西城堡酒庄（Château Bouche）是法国罗纳河谷（Côtes-du-Rhône）南部产区的知名酒庄，周围环绕着闻名遐迩的三大顶级产区：教皇新堡（Châteauneuf du Pape）、吉恭达斯（Gigondas）和瓦奇哈斯（Vacqueyras）。勃西城堡的书面记载可以追溯到1703年。三个世纪的历史铸造了勃西城堡之魂。

Château Bouche se situe dans les vignobles les plus célèbres de Côtes du Rhône méridionales, entouré par 3 crus réputés: Châteauneuf du Pape, Gigondas et Vacqueyas. La trace écrite de Château Bouche date de l'an 1703. Une histoire de 3 siècles a moulé l'esprit de Château Bouche.

WeinAllianz GmbH

7.2B3-05

Address: 德国 Germany Ruppertsberg-Hauptstraße 94
Tel: 021-58662288
Email: 2881090286@qq.com
Web:

located in Ruppertsberg of Rheinland-Pfalz in Germany. We're one of the largest wine producer group of Germany. The wineries, which belong to the WineAllianz, come from the most important 8 statutory regions of Germany. The total output of these 8 regions accounts for more than 90 percent of the total output of the whole statutory regions. The wineries can show the style of German wine quite well.

FIWA SAS

7.2B3-06

Address: 法国 France 92200-NEUILLY SUR SEINE-183 AVENUE ACHILLE PERETTI
Tel: +33 6 80 37 37 05
Email: contact@fiwa.fr
Web: www.fiwa.fr

FIWA SAS is a French company which organize the International level wine and spirits and others drinks competitions with the most professionnal wine and spirits Experts, strictly following the DGCCRF French rules. 3 most important contests：FIWA, FIWA BIO & FISA - France International Wine, Wine Bio & Spirits Awards. All products around the world have the right to join these competitions.

Greenock Creek Wines

7.2B3-07

Address: 澳大利亚 Australia South Australia-Adelaide-450 Seppeltsfield Road Marananga
Tel: (08) 8562 8103
Email: Jimmy@greenockcreekwines.com.au
Web: www.greenockcreekwines.com.au

Greenock Creek WInes成立于1978年。位于南澳大利亚巴罗萨谷产区。主要致力于生产单果园酿造而成的果味浓郁，入口顺滑的高度数干红葡萄酒。曾多次获得罗伯特-帕克百分满分点评。

Greenock Creek Wines establish at 1984 with only Two wines. Thought the years we increased our range into 12 with each has their own unique characteristic.

Novel Logic Pty Ltd (Australia Origin Direct) 澳洲原产地

7.2B4-02

Address: 澳大利亚 Australia South Australia-Mawson Lakes-36 Mowbray Street
Tel: +618 82118998
Email: ivan@innovads.com.au
Web: www.australiaoriginindirect.com.au

澳洲原产地 Australia Origin Direct 是澳大利亚 Novel Logic 公司运营的中澳跨境电 商一站式服务平台，旨在帮助澳洲企业在中国市场的发展。澳洲原产地电商服务平台严选澳大利亚本地的优秀商家和高质量产品，将澳大利亚最好的产品及服务推向中国的消费者。

Australia Origin Direct (AOD) is a cross-border e-commerce service for use between China and Australia. Managed by South Australian company Novel Logic Pty Ltd and in conjunction with JD Global and other partners, this e-commerce technology enables closer trade links between Australian businesses and Chinese consumers and business.

BENTLEY MALAYSIA SDN.BHD

7.2B4-03

Address: 马来西亚 Malaysia Kedah-Langkawi-No.20,22,24,Jalan Pandak Mayah 6, Kuah,07000,
Tel: 0574-26866619 +86(0)574 26866619
Email: grace.pan@louis-bentley.com
Web: www.zenogp.com

宾利马来西亚公司创立于2009年，隶属于马来西亚金路集团。业务涉及免税和旅游零售、食品及酒类产品的代理与分销、旅游产业、餐饮业、酒店业、房地产业以及一站式旅游配套与服务等。目前在兰卡威拥有8家免税旗舰店以及15家分公司，产品涉及葡萄酒与烈酒、雪茄、巧克力糖果、咖啡茶叶等特产食品等。自创COTE DE PARFUME, CUBAN, CHICKING等品牌连锁店，在业内极具口碑及影响力。

Founded in 2009, BENTLEY MALAYSIA was set up more than ten years ago and specializes in duty-free and travel retail, international and domestic distributions, tourism properties, food and beverage, hotel and resorts, real estates as well as one-stop travel and tours services. What's more, BENTLEY MALAYSIA owns 20% market share in Langkawi, 8 duty-free flagship stores and 15 subsidary companies.

Cavesmaitre France

7.2B5-03

Address: 法国 Naudonnet-Virsac-9 Rue Naudonnet France Naudonnet-Virsac-9 Rue
Tel: 0033-0952282274
Email: chateau.julie@gmail.com
Web: www.chateaulevin.com

法国卡斯特于2012年在法国注册成立，注册资金是439万欧元。同年收购了荷兰最大的葡萄酒企业Baarsma集团在波尔多拥有的三大酒庄。法国卡斯特凭借此次收购正式进入了法国以及其他欧洲国家的葡萄酒销售渠道。卡斯特这一品牌是法国葡萄酒在中国市场的第一品牌在中国市场已经耕耘了21年，也同时是进入中国市场最早的进口葡萄酒品牌。

Cavesmaitre France was incorporated in France in 2012 with a registered capital of 4.39 million euros. In the same year, it acquired the three major wineries owned by the Baarsma Group, the largest wine company in the Netherlands, in Bordeaux.

VIAUD WINES

7.2B5-04

Address: 法国 France 10 Route de Viaud,33500, Lalande de Pomerol
Tel: +33 557511786
Email: luoman@cofco.com
Web:

Viaud Wines是一家成立于2011年，总部位于法国拉郎德波美侯的酒商。Viaud Wines已经与多家法国酒庄建立良好的合作关系，力求为每一位客户寻找到满意的、高品质的葡萄酒。

Viaud Wines is a negociant based in Lalande de Pomerol, France, founded in 2011. Viaud Wines has established good relationships with a number of French domaines and strives to find the satisfying, high quality wine for every customer.

澳大利亚澳佳集团有限公司 / Vastrade Pty Ltd

7.2B5-05

Address: 澳大利亚 新南威尔士州-利得康姆铁道路2号49栋 Australia NSW-49/2 Railway Pde Lidcombe NSW 2141 Australia
Tel: 020-31600383
Email: info@blueriverwine.com
Web: vastrade.com.au

澳佳集团于1988年创立于澳大利亚悉尼，先后创立蓝河(BLUE RIVER)、蜜泉(HONEY SPRING)、巴拉诺瓦(BARRA NOWA)等品牌，将澳大利亚葡萄酒、蜂蜜、保健品、日用品、天然饮用水、果汁、菜籽油、奶粉等优质产品，带给中国的消费者。澳佳集团致力于澳中两国之间的双边贸易与投资，本着“本位与天然的回归”的核心理念，澳佳集团将不断开拓创新产品与市场，为澳中之间的文化与交流做出贡献。

Vastrade established in early 1980s in Sydney. Vastrade is an integrated company which involved in a variety of business areas. Over the last 30 years, Vastrade has made significant contributions to trade and investments, and performed as a bridge between Australia and China. The outstanding achievements have built a substantial foundation for the future development of Vastrade.

Welove Group Limited

7.2B5-06

Address: 新西兰 New Zealand Auckland-Rosedale-9 Orbit Drive
Tel: +64 21 034 9023
Email: iris@welove.co.nz
Web: www.luxerose.co.nz

依托南太平洋的纯净和英联邦对高品质的要求，We Love的每一件产品都是质量与时尚最佳的结合。Welove旗下的luxerose酌系列是中国市场罕见的中高度鸡尾酒。酌忆礼盒套装作为酌系列中最杰出的代表。带着美国时尚包装设计大奖的光环，不仅外表的美丽，内在的高贵亦令她在任何场合都散发着耀眼的光芒。

The We Love Group is a New Zealand based company committed to producing thoughtfully manufactured, uniquely designed products that combine taste, quality and culture to deliver a beautiful experience from the inside out. Quality is at the forefront of what we do at We Love Group.

南侨(泰国)公司 / NAMCHOW (THAILAND) LTD.

7.2B5-07

Address: 泰国 Thailand Bankok-Wattana-75/27-29,18th-19th Floor,Ocean Tower 2, Soi Sukhumvit 19 (Soi Wattana),Sukhumvit Road, North Klongtoey
Tel: 86-21-61955602
Email: su.alice@ncbakery.com
Web:

南侨集团1952年在台湾成立，一甲子以来已发展为全球烘焙原料及食品大厂。本次参展的南侨(泰国)公司1990年在曼谷投资设厂，生产休闲米果、婴儿米果等产品行销全球70余国，推广米食文化受到西方主流市场的欢迎，外销遍及五大洲。

Namchow (Thailand) Ltd. joins CIIE on behalf of the Namchow Group (NCG). Established in 1952, NCG is a well-respected food manufacturer founded in Taiwan Region. Its first overseas investment was launched in Thailand in 1990, producing instant noodle, rice crackers etc.

Latinfina S.A. - Don Cristobal

7.2B5-08(01)

Address: 阿根廷 Argentina CABA-Capital Federal-Talcahuano 758, 2B
Tel: +54 11 4373 8365
Email: clapania@doncristobal.com.ar
Web: www.doncristobal.com.ar

Don Cristóbal is an Argentine family business run in Luján de Cuyo, Mendoza with a strong focus on exports. Nowadays, 85% of its wines are exported to over 15 countries in the Americas, Asia-Pacific and Europe. The winery's facilities have a capacity of 2.2 million liters and state-of-the-art technology and owns 144-hectare of planted vineyards.

Jasmine Monet SRL

7.2B5-08(02)

Address: 阿根廷 Argentina *Non U.S./Canada/Mexico-Rosario-Av. Candido Carballo 194 4 C, Puerto Norte
Tel: +5492613084222
Email: export@jasminemonet.com
Web: www.jasminemonet.com

At Jasmine Monet we respect the environment as a conviction. We maintain the richness of the terroir, in order to obtain long-term productivity. And we focus towards sustainable agriculture; been useful in a world we are part of.it is our objetive to obtain high quality products, protecting at the same time the environmental conditions of our lives.

CASARENA / CASARENA Winery & Vineyards

7.2B5-08(03)

Address: 阿根廷 Argentina Mendoza-Mendoza-Espejo 529
Tel: 5492616919751
Email: nicolas@casarena.com
Web: www.casarena.com

CASARENA is a century old family winery built in 1937. Accounting 300 hectares in 4 private owned vineyards, strategically located in LUJAN DE CUYO, the most important and oldest wine region in the Province of Mendoza. We offer a complete portfolio from entry level to Super Premium Iconic wines, all of them recognized by the most influential wine judges in the world as Parket, Suckling and Atkin.

Antonio Gonzalez SA

7.2B5-08(05)

Address: 阿根廷 Argentina Ciudad de Buenos Aires-caba-Jose Cubas 2729
Tel: +5411 4574 2767
Email: jimena.bruyere@vinosgalan.com
Web:

Antonio Gonzalez SA is a family company, who has started in the early fourties With more than 600 hectars in the main areas of Mendoza, near the mountains that guarantee the best quality in each glass of wine. Our big capacity allowed us to cover the internal market and focus on export to different countries, mainly China.

AFC WINES SRL

7.2B5-08(06)

Address: 阿根廷 Argentina Buenos Aires-Buenos Aires-Marcelo T de Alvear 951, piso 1°
Tel: +542214454340
Email: contact@afc-wine.com.ar
Web: www.fincareygutierrez.com.ar

From Argentina (Mendoza) we produce and export high quality wines through our registered trademarks GORILA and FINCA REY GUTIERREZ. We currently sell our GORILA malbec wine in China since 2018. We are a young and dynamic company with high potential and adaptability.

SUL MINEIRA S.A.

7.2B5-08(07)

Address: 阿根廷 Argentina MENDOZA-MENDOZA-SERU 251
Tel: 005492616407862
Email: mbartolucci@sulmineira.com.ar
Web: www.sulmineira.com.ar

We are producers and exporters of bulk and bottled wines, we have 30 years of experience exporting to different countries, we offer high quality products with very competitives prices.

Kineta

7.2B5-08(08)

Address: 阿根廷 Argentina Mendoza-Maipu-Rodriguez Peña 6655
Tel: 542615242266
Email: everazay@kineta.com
Web: www.kineta.com

Kineta is a leading company producing Grape Juice Concentrates and Wines. Our facilities plants located in Argentina are equiped with top technology and the best quality standards FSSC22000 / FDA / HALAL.Since 2009, the company has been sourcing different world markets.

Los Haroldos SA

7.2B5-08(09)

Address: 阿根廷 Argentina Mendoza-San Martin-Ruta Panamericana y Miguez
Tel: 00542614765891
Email: avollmer@familiafalasco.com
Web: www.losharoldos.com

Our family has its roots in the wine industry, with almost 80 years of experience. Nowadays, the third generation runs the dream that started in 1939.

BARBARIANS S.A.

7.2B5-08(10)

Address: 阿根廷 Argentina CIUDAD-MENDOZA-521-MITRE
Tel: +54 9 261 2410081
Email: info@barbarians.wine
Web: barbarians.wine

Barbarians, inspired by the legendary rugby team founded in 1890, is a group of independently owned family wineries specialized in high-quality wines from the Uco Valley. We share the passion for wine. Each of our winemakers has his own personality and his particular style of wine, but they all share a common element of sustainable viticulture and natural winemaking.

VALLE DE LA PUERTA

7.2B5-08(11)

Address: 阿根廷 La Rioja-Vichgasta-Ruta Nacional 74 km 1186 Argentina La Rioja-Vichigasta-Ruta Nacional 74 km 1186
Tel: +54 11 5278-3001
Email: anoble@valledelapuerta.com
Web: www.valledelapuerta.com

We are producers of fine wine and extra virgin olive oil in the Famatina Valley since 1994.A special microclimate, with hot and dry summer days and cool nights, combines with the clean air and desert-like topography of the valley to ensure outstanding ripening conditions for grapes and olives.

Agrosud SA

7.2B5-08(12)

Address: 阿根廷 Argentina Buenos Aires-Suipacha 1111
Tel: 00541143128980
Email: psuchecki@agrosudsa.com.ar
Web: www.agrosudsa.com.ar

Agrosud is one of the leading international agricultural products and food brokerage companies in South America, supported by over 50 years of experience generating efficient and transparent transactions.Our team of 40 brokers is constantly focused on the promotion of agricultural and food products among the different world markets.

ARGENCROPS SA

7.2B5-08(13)

Address: 阿根廷 Argentina JUJUY-SAN SALVADOR DE JUJUY-ALVEAR 678- OF 23
Tel: +543884243021
Email: vrita@argencrops.com.ar
Web: www.argencrops.com

Argencrops SA is a well known exporter company in Argentina. We focus in the export of beans, chickpeas, sesame, pop corn and many other products.

Chaquepe

7.2B5-08(15)

Address: 阿根廷 Argentina Mendoza-San Martin-Nogues 224
Tel: +5492615364309
Email: comex@marguerite.com.ar
Web: www.marguerite.com.ar

Marguerite is one the most trending wineries in Argentina, based in Mendoza. We are currently supplying the world with a supprising quality wine for an extremely convenient price.Our new packaging blends perfectly elegance and mordern style.

Iberconsa de Argentina S.A.

7.2B5-08(18)

Address: 阿根廷 Argentina Chubut-Puerto Madryn-Parque Industrial Pesquera Macizo 8 Parcela 5
Tel: +542804453088
Email: pablo.basso@iberconsa.com.ar
Web: www.iberconsa.es

Iberconsa de Argentina is the biggest fishery company from Argentina. The company has their own fleet for catching and processing Argentina Red Shrimp, Argentina Illex Squid, Argentina Hake and others.

GRUPO CHIARCO / Novamar S.A.

7.2B5-08(19)

Address: 阿根廷 Argentina Ciudad de Buenos Aires-CAPITAL FEDERAL-Tucuman 540 pios 7D
Tel: +54 223 480 1689
Email: info@grupochiarco.com
Web: www.grupochiarco.com

Grupo Chiarco is a company dedicated to the processing and marketing of sea products destined to export. provides a complete range of products and services in the fishing sector. The main export products are: Red Shrimp, Squid illex, Hake hubbsi, Yellow Craker, Red Porgy, king Weakfish and Sea Trout.The fishing factories are located in Mar del Plata/ Puerto Madryn, fishing ports in Argentina.

Andeluna Cellars S.R.L.

7.2B5-08(20)

Address: 阿根廷 Argentina Mendoza-Mendoza-Montevideo 230, 6th floor, Apt 2
Tel: 00542614299299
Email: flardone@andeluna.com.ar
Web: www.andelunachina.com

Andeluna is a family owned business, founded in 2003, with the vision of being recognized as one of the top producers of high quality wines of Argentina. The winery is located in the rocky terroir of Gualtallary, Tupungato, Mendoza. Andeluna works with sustainable agricultural practices and its wines are faithful representations of their homelands of origin.

ARBUMASA S.A.

7.2B5-08(21)

Address: 阿根廷 Argentina CABA-CABA-Avda Alicia Moreau de Justo 740 PB
Tel: 00541146006800
Email: info@arbumasa.com
Web: www.arbumasa.com

ARBUMASA S.A. is a fishing company dedicated to the capture or shrimp and squid using its fleet of freezer vessels.

Bodega Puesto del Marques

7.2B5-08(23)

Address: 阿根廷 Argentina salta-salta-Santiago del Estero 1253
Tel: +54 11 3363 1246
Email: analiaxbasualdo@gmail.com
Web: bodegaquebradadelasflechas.com

The Calchaquies Valleys are a unique place for the cultivation of the vine. The High altitude wine are made with grapes from 1900 to 2900 msm, resulting in wines of great quality and personality that have greater body, incredible red and intense violet colors, persistence in the mouth and aromas that linger in the memory.

Tittarelli Wines

7.2B5-08(26)

Address: 阿根廷 Argentina La Flor
Tel: +5492613072705
Email: amarolla@tittarelli.com.ar
Web: www.tittarelli.com.ar

GREAT WINES WITH A CENTURY OF TRADITION In 1915,10 years after sailing from Italy, Enrico Tittarelli founded one of the most important wineries in Argentina, TITTARELLI WINES.100 years later we evolved technologically, keeping and honouring his entrepreneurial spirit and love for the fruit of our land.In these days, the company combines tradition and technology to create wines with unbeatable.

Aitor Ider Balbo SAACI

7.2B5-08(27)

Address: 阿根廷 Argentina Mendoza-San Martin-Baudrel y Vior
Tel: 00542614765891
Email: avollmer@familiafalasco.com
Web: www.losharoldos.com

Our family has its roots in the wine industry, with almost 80 years of experience. Nowadays, the third generation runs the dream that started in 1939.

WHT S.A.

7.2B5-08(34)

Address: 阿根廷 Argentina Mendoza-Agrelo, Lujan de Cuyo-Ruta Provincial 15 km 32
Tel: +5492614179000
Email: mht@wht.com.ar
Web: www.wht.com.ar

WHT is an argentine venture group focused exclusively on investments related to the high-end wine industry. Our projects possess the same goal: to satisfy the international demand of wine connoisseurs through the creation and commercialization of exemplars of the highest quality, as well as the development of other touristic and promotional endeavors to position our wines.

BODEGA RJ VIÑEDOS

7.2B5-08(36)

Address: 阿根廷 Argentina MENDOZA-LUJAN DE CUYO-TERRADA 2400
Tel: 54 (261) 524 7870
Email: j.jofre@rjvinedos.com
Web: www.rjvinedos.com

Family owned company from Mendoza - Argentina, dedicated to the production of quality wines from unique terroirs, the best grape-growing areas from the country. The winery manages over 100 hectares mostly in Uco Valley (in the 3 subregions) and Lujan de Cuyo. Currently the winery exports the 85% of its production and has received more than 90 international Awards. Sustainable practices and GMP.

Susana Balbo Wines / Dominio del Plata S.A.

7.2B5-08(37)

Address: 阿根廷 Argentina Mendoza-Agrelo, Luján de Cuyo-Cochabamba 7801
Tel: +542614989220
Email: exports@sbwines.com.ar
Web:

Susana Balbo Wines is a family owned winery dedicated to making high quality wines. We are located in the town of Agrelo, Luján de Cuyo department of Mendoza, in the foothills of the Andes Mountains.

TRAWELUWN S.A / Trawëluwn s.a

7.2B5-08(38)

Address: 阿根廷 Buenos Aires-Mar del Plata -San Salvador 4781 Argentina Buenos Aires-Mar del Plata -Castelli 2581
Tel: +5492234803559
Email: adrian@traweluwn.com.ar
Web: www.traweluwn.com.ar

A company located in the city of Mar del Plata dedicated to the processing and marketing of fish inside and outside the country, following all the standards required by the industry. Characterized by a responsible and transparent way of working.

El Porvenir de Cafayate

7.2B5-08(40)

Address: 阿根廷 Argentina Salta-Cafayate Valley-Cordoba 32
Tel: +549 1164590013
Email: patricio@elporvenirdecafayate.com
Web: www.elporvenirdecafayate.com

We are a family winery and this defines our viti-viniculture. El Porvenir de Cafayate is the luxury of thinking long-term.We believe in Cafayate, in its potential, in its people, its history and its culture.We feel a deep respect and love for our terroir and we want our wines to reflect this.We tend to our vines at an altitude of 1,750 meters above sea level in a unique and privileged region.

Viñedos de la Patagonia S.R.L.

7.2B5-08(42)

Address: 阿根廷 Argentina Neuquen-San Patricio del Chañar-Ruta provincial 7 Calle 15
Tel: 5492995804400
Email: julio@bodegamalma.com
Web: www.bodegamalma.com

Bodega Malma was born as part of a new wine making project development in San Patricio del Chañar, Province of Neuquén. It launched its wines into the market in 2004 and since that time it has been exporting its products to the world. Bodega Malma is owned by the Viola family, pioneers of the whole sub region of San Patricio del Chañar, and passionate about Patagonia and its terroirs.

Argenmieles / Gruas San Blas (Argenmieles)

7.2B5-08(43)

Address: 阿根廷 Argentina Buenos Aires-Don Torcuato-Posadas 2358
Tel: +54 11 4846 7070
Email: export@gsb.com.ar
Web: www.argenmieles.com.ar

Argenmieles is a company dedicated to the production and export of natural bee honey in all its types and presentations. It is currently exporting to over 20 destinations thanks to a wide range of products from bulk to packaged honey, including multi and monoflorals honeys, honeycomb, whipped honey among others. We produce private labels under top international standards like FSSC 22000, organic.

葡岚德酒庄 / PULENTA ESTATE

7.2B5-08(44)

Address: 阿根廷 门多萨-GODOY CRUZ-AV. SAN MARTIN SUR 2650, LOCAL PORSCHE Argentina MENDOZA-GODOY CRUZ-AV. SAN MARTIN SUR 2650, LOCAL PORSCHE
Tel: +86 13926164089
Email: joenhong@163.com
Web: www.pulentaestate.com

葡岚德家族是意大利移民的后代，也是酿酒师的传人。从1912开始种植葡萄园，三代以来一直从事葡萄酒酿造行业。在2002年，爱德华多与雨果给葡岚德酒庄赋予了新活力，利用葡岚德家族 100 多年来的酿酒传统，智慧，经验与先进酿酒技术相结合，从而诞生了今日看到的葡岚德酒庄。我们的使命就是酿造出多系列限量版美酒，为她们产自于阿根廷而自豪。
The Pulenta family has been making wine in Argentina for three generations. Eduardo and Hugo Pulenta, gave life to Pulenta Estate in 2002, combining experience and highly qualified labor. The tradition, knowledge, and experience of the family acquired during 100 years since 1902, live today in Pulenta Estate. Our mission is to produce a limited series of great wines, proudly made in Argentina.

Wines of Argentina

7.2B5-08(46)

Address: 阿根廷 Argentina Mendoza-Mendoza-Sarmiento 212, 2nd floor
Tel:
Email: sherry@winesofargentina.com
Web: www.winesofargentina.com

Wines of Argentina is the entity responsible for promoting the brand and the country image of Vino Argentino around the world.

BODEGA RAFFY SRL

7.2B5-08(47)

Address: 阿根廷 Argentina MENDOZA-TUPUNGATO-LA VENCEDORA S/N
Tel: +54902614205217
Email: jcbu64@gmail.com
Web:

Boutique winery and vineyard with export profile, commitment to the environment. Own elaboration free of tartaric. Direct presence of producer and winemarket at the stand.

La Ganadera Arenales SA

7.2B5-08(49)

Address: 阿根廷 Argentina buenos aires -monte grande -arenales 1910
Tel: +541143960080
Email: framos@amtsud.com.ar
Web: www.ganaderaarenales.com

La Ganadera Arenales SA, Est. No 4073 is one of the 4 Slaughterhouses approved for china part of the Penta. we can process 2000 cattle heads per week (10 fcl per week) only for china and 7000 for local market and others.

Bodega Renacer

7.2B5-08(50)

Address: 阿根廷 Argentina Mendoza-Lujan de Cuyo-Brandsen 1863
Tel: +54261524416
Email: rgil@bodegarenacer.com.ar
Web: www.bodegarenacer.com.ar

Our winery, designed to produce premium wines, was built in 2004 in Perdriel, Mendoza - Argentina, in the foothills of the Andes Mountains. It is a fusion of classic and modern architecture. A blend of tradition with modernity.

Newsan

7.2B5-08(50)

Address: 阿根廷 Argentina Buenos Aires-Buenos Aires-Arias 3751
Tel: 00541153682800
Email: Comercial_exp@newsan.com.ar
Web: www.newsan.com.ar

Newsan is an Argentine Company, dedicated to the capture, production and packaging of the captured fish in the Argentine Patagonia cold waters. We own a processing plant in Comodoro Rivadavia and a fleet of four own ships and 6 vessels that works entirely and exclusively dedicated to the captured of different kinds of species with a daily process in order to assure the best quality.

BODEGAS STAPHYLE

7.2B5-08(51)

Address: 阿根廷 Argentina Mendoza-Lujan de Cuyo-Malabia 581, Carrodilla
Tel: +542614961476
Email: ceo@staphyle.com.ar
Web: www.staphyle.com.ar

Boutique Winery dedicated to produce premium wines, in the most prestigiuos terroir of Argentina. 1.000.000 litters vinification capacity. Onwners of vineyards in Agrelo and Potrerilos. Also a boutique Hotel in that area.

CotaLtda

7.2B5-08(52)

Address: 阿根廷 Argentina Tucuman-Tafi Viejo-Diagonal a Tafi Viejo km6
Tel: +543814618626
Email: sdavalos@cotaltd.com
Web: cotaltd.coop

We are a cooperative enterprise founded in 1961, whose efforts are dedicated to producing,industrializing and marketing citrus products such as esential lemon oil, frozen concentrate lemon juice and dehydrated lemon peel.

阿根廷高海拔葡萄酒联盟 / CONSORCIO DE BODEGAS DE ALTURA

7.2B5-08(54)

Address: 阿根廷 Argentina Ciudad Autónoma de Buenos Aires-11 de Septiembre 4567
Tel: 0054-911-64891117
Email: matias.cao@bdca.com.ar
Web:

阿根廷高海拔葡萄酒联盟有四个来自阿根廷萨尔塔省的酒庄组成，所有酒庄都处于海拔1700米以上。高海拔葡萄酒的个性明显，酒体浑厚、口感浓郁、颜色深沉。
CONSORCIO DE BODEGAS DE ALTURA IS A CONSORTIUM FORMED BY FOUR WINERIES FROM SALTA, ARGENTINA, ALL LOCATED 1700 METERS ABOVE THE SEA. THE HIGH ALTITUDE WINE HAS A GREAT CHARACTER, INCREDIBLE COLORS AND AROMA

LAO GOLD CHAMPA TEA SOLE CO.,LTD

7.2B6-04

Address: 老挝 万象省-西阔达彭县三江市场-万象市 Laos Vientiane Capital-Sikhodtabong District -Ban Vattay Noy Thong Vientiane Lao PDR
Tel: 00856-21-520177
Email: guonvshen@icloud.com
Web: www.jinzhanba.com

老挝金占芭茶业有限公司是老挝政府授权“保护、开发、利用老挝古树茶”的企业之一，是目前老挝古茶树资源占有量最多、古茶树资源最优质的企业，也是老挝最早、规模最大、名气最大的专注于老挝原生态古树茶保护和开发的茶业企业，金占芭古树茶被制定为老挝东盟峰会国宾礼茶，第十三届中国-东盟博览会国宾接待茶，荣获第四届全国武林斗茶大会暨首届中华茶博会银奖，是经老挝卫生部与农林部认证的绿色有机产品。
Lao Gold Champ Tea Sole Co., Ltd.is one of the enterprises authorized by Laos Government to protect、develop and utilize Laos ancient tree tea. It is the enterprise with the largest amount of ancient tree tea resources and the best quality of ancient tree resources in Lao

Proshyan Brandy Factory

7.2B6-05(01)

Address: 亚美尼亚 Armenia Yerevan-Yerevan-2a Ashtarak Highway
Tel: +37411777799
Email: export@proshyan.am
Web: www.proshyan.am

“Proshyan Brandy Factory” is one of the largest producers and exporters of Brandy and Wine in Armenia. Working with more than 30 countries worldwide, the factory offers a wide selection of products, brandy aged from 3 to 30 years, grape wines as well as fruit wines which are famous all over the world.

Karas Wines

7.2B6-05(03)

Address: 亚美尼亚 Armenia Armavir -Arevadasht village
Tel: +374 10493005 ext. 7
Email: dlopez@bdfm.com.ar
Web: www.karaswines.com

Sustainability, family, tradition and expertise come together at Karas Wines, seated under the eternal gaze of Mount Ararat. Our mission is to produce world-class vintages from our own vineyards in Armavir.
Armenia's ancient oenological culture, inspires us to chart the future of the birthplace of wine while reclaiming the mantle as a producer of the world’s most desired wines.

Armenia Wine Company

7.2B6-05(09)

Address: 亚美尼亚 Armenia Sasunik village-Aragatsotn region
Tel: +37460467717
Email: export@armeniawine.am
Web: www.armeniawine.am

the company is the icon of modern winemaking of Armenia with its award winning wines and state of the art winery. AWC is also the leader of local market in the quality wine sector as well as the leader in Armenian wine exports.

B.H. Brandy Company CJSC Yerevan Branch

7.2B6-05(11)

Address: 亚美尼亚 Armenia Yerevan-Yerevan-Yeghbayrutyan 5a
Tel: +37460448616
Email: marketing@madatoff.com
Web: madatoff.com

The factory was founded in 1931. In 2002, with 2 more factories joining, it was re-branded into "B.H. Brandy Company". Today "B.H. Brandy Company" specializes in brandy, wine and distilled fruit vodka production, made by about 800 skillful specialists, many of whom are qualified brandy and wine-makers.

Gevorkian winery LLC

7.2B6-05(12)

Address: 亚美尼亚 Armenia Yerevan-Acharyan str., 40A
Tel: +37493100365
Email: info@gevorkianwinery.com
Web: www.gevorkianwinery.com

Founded in 2006, Gevorkian Winery is currently one of the leaders of the winemaking industry in Armenia. Our company offers a wide range of high-quality products made from indigenous Armenian grape varieties, as well as fruits and berries.

Ijevan WIne Brandy Factory CJSC

7.2B6-05(13)

Address: 亚美尼亚 Armenia Davtashen-Yerevan-25 A. Mikoyan street
Tel: +37411999191
Email: info@ijevangroup.com
Web: www.ijevangroup.am

Company produces grape and fruit wines, brandy, vodka, as well as cannes.

麒麟麦酒株式会社 / KIRIN Brewery Company, Limited

7.2B6-07

Address: 日本 Japan Tokyo-Tokyo-NAKANO CENTRAL PARK SOUTH 10-2, Nakano 4-chome, Nakano-ku
Tel: 86-21-5187-7070x224
Email: shelley.xu@kirinchina.cn
Web: www.kirin.co.jp

是日本最大的食品产业之一。主要产品是麒麟啤酒，全球旗舰品牌是麒麟一番榨啤酒。
KIRIN Brewery Company is one of the biggest Beer Company. The main Product is KIRIN Beer. The Global Flagship product is KIRIN ICHIBAN Beer.

Productos Congelados Bajo Cero

7.2B7-03(03)

Address: 哥斯达黎加 Costa Rica La Fortuna-Alajuela-Costa Rica
Tel: (506) 25745151
Email: laura@bycexportadores.com
Web: www.bajocerocr.com

Productos Congelados Bajo Cero has managed to position itself in the most demanding markets in the world, both in food service and retail channels, offering customers a wide offer of products and presentations in order to supply the needs of the markets.

Cooperativa De Caficultores De Heredia Libertad R L

7.2B7-03(06)

Address: 哥斯达黎加 Costa Rica Heredia-Heredia-700N, 400E, 100N de la Universidad Nacional
Tel: (506) 2237-2040
Email: gtrejos@coopelibertad.com
Web: www.coopelibertad.com

We are a cooperative company in the coffee industry, which offers high-quality products and services to the national and international market, committed to the integral growth of its associates and associated coffee producers of Costa Rica and the well-being of its employees based on a productive, honest and proactive work.

Voskevaz Wine Cellar LLC

7.2B6-05(14)

Address: 亚美尼亚 Armenia Aragatsotn -Voskevaz-8th street, 19 bld.
Tel: +37410202006
Email: info@voskevaz.am
Web:

Voskevaz Winery was founded in 1932. In 2004 it was modernized by high-tech Italian equipments. Both traditional and modern wine making technologies are used to produce incredible "Voskevaz" wines. Only native grape varieties are used in our wine production. We produce 16 types of wines: dry, semi-sweet, dessert and fruit wines.

Turrones de Costa Rica

7.2B7-03(01)

Address: 哥斯达黎加 Costa Rica Heredia-San Isidro-San Isidro de Heredia, Costa Rica
Tel: 22687878
Email: info@turronesdore.com
Web: www.turronesdore.com

31 years of production and sales of processed nougats, nutrition bars and others sweets, and exporting products since 1995

Cooperativa Agricola Industrial Victoria R.L. (COOPEVICTORIA)

7.2B7-03(04)

Address: 哥斯达黎加 Costa Rica Alajuela-Grecia -Grecia, Alajuela
Tel: (506)21059426
Email: wrodriguez@coopevictoria.com
Web: www.coopevictoria.com

CoopeVictoria is an Agricultural and Industrial Cooperative. It was established on October 12th, 1943, as the first Cooperative of Costa Rica, owned by 3000 small producers of coffee and sugar cane. It operates under strict quality controls, responsible conditions and, all in environmental harmony.

CR Original Coffee S.A

7.2B7-03(07)

Address: 哥斯达黎加 Costa Rica San José-Tibás-Llorente de Tibás, 150m norte del Automercado, San José, Costa Rica
Tel: 40001440
Email: oscarfchacon@costaricaoriginalcoffeebrands.com
Web: www.costaricaoriginalcoffeebrands.com

El gusto products was born in response to an increasingly specialized and culturized market, we seek to exceed the expectations from our customers not only in quality and price but to work hard on ecological farming preservation, the improvement of our producers and processor's life and our accompaniment and experience on the coffee and cocoa businesses development

富士山銘水株式会社 / Mt.Fuji Springs Inc

7.2B6-06

Address: 日本 银座1-16-1-中央区-东京都 Japan Tokyo Office1-16-1 Toka Bldg 2F, Ginza,Chuo-ku, Tokyo, 104-0061, japan
Tel: 81355243600 +81355243600
Email: s.ri@fuji-meisui.co.jp
Web: fuji-meisui.co.jp

富士山銘水株式会社成立于2010年，水源位于富士山1000米海拔处，是一家集饮水机开发、设计、生产、维修、及天然矿泉水销售为一体的新型桶装饮用水企业;公司注册资金约4亿日元,员工总数约280余人，凭借在饮水机领域的专业水平和成熟领先的技术，迅速发展成为日本桶装饮用水行业的佼佼者。不断为用户提供满意的高科技饮水机以及美味、放心、安全的富士山天然水是我们始终不变的追求。
Mt.Fuji Springs Incorporation is a brand new barreled water delivery company which integrates the development, design, production, maintenance of water dispenser and the sale of natural mineral water. We devote ourselves to providing high-end intelligent water dispensers and delicious, safe natural water from Mount Fuji for more customers.

Arjona Import & Export Company Ltda.

7.2B7-03(05)

Address: 哥斯达黎加 San José-Escazú-Escazú Guachipelín de CC Paco 200m sur y 200 oeste casa #15 Costa Rica San José-Escazú-Plaza Roble, Terrazas Building 5th Floor
Tel: (506) 8416-3040 / (506) 25055871
Email: jorge@arjona-group.com
Web: www.arjona-group.com

Arjona Group provides a versatile platform for the generation of a wide range of businesses, ranging from the production and marketing of high-quality products for human consumption (fruits and vegetables, coffee, water, among others), raw materials for the timber industry, as well as investment projects in Latin America.

Cooperativa Agricola Industrial Victoria R.L. (COOPEVICTORIA) / Inchi Costa Rica S.A

7.2B7-03(08)

Address: 哥斯达黎加 Alajuela-Grecia-3 Kilometros Noroeste de La Iglesia de Grecia CAMINO A POAS. Costa Rica Peréz Zeledón -San José-San José. Perez Zeledón
Tel: (506)21059426 (506) 2770 3373
Email: wrodriguez@coopevictoria.com jmora@crn.life
Web: www.coopevictoria.com www.crn.life

CRN.life is dedicated to the development of products focused on improving the quality of life of our customers, establishing the safety of the ingredients and the power of the product, all while maintaining the vanguard of nutritional science.

Global Partners

7.2B7-03(09)

Address: 哥斯达黎加 Costa Rica Heredia-Heredia-Ofibodegas Barreal, Oficina 6, Barreal de Heredia
Tel: 40005700
Email: tania.gutierrez@gpartners.com
Web: www.gpartners.com

We are a company with almost 20 years of experience.We exports Costa Rican finest Frozen Tropical Fruits (Pineapple, Papaya, Mango and Melon).Our IQF fruits are available in Industrial, Foodservice and Retail presentations - private labeling available upon request.

Trading Blue Mountain

7.2B7-03(12)

Address: 哥斯达黎加 Costa Rica Cartago-Cartago-Cartago Barrio Loyola, San Nicolas, del Colegio Seráfico 200 oeste
Tel: 50622015331
Email: jovargas@gsl.co.cr
Web: tbmcr.site

We are a Costa Rican manufacturer of natural fruits products in doypack and glass packaging. Our production facility has the most modern and innovative technology systems. The combination of experience, expertise, technology and innovation results in superior levels of quality and food safety. We offer our customers the best quality products and services

MARINASOL

7.2B7-04(02)

Address: 秘鲁 Peru LIMA -LIMA-AV. EL DERBY 250, PISO 4 – SANTIAGO DE SURCO
Tel: +511 634 7175
Email: MLIENDO@MARINASOL.COM.PE
Web: www.marinasol.com.pe

WE ARE MARINASOL, AN AQUACULTURE COMPANY, LEADER OF WHITELEG SHRIMP (PENAEUS VANNAMEI) PRODUCTION IN PERU. DUE TO OUR ADVANCED INTENSIVE SHRIMP FARMING TECHNOLOGY, VERTICAL INTEGRATION AND CONTROL OVER THE PRODUCTION CHAIN (LARVAE REPRODUCTION, FARMING AND PROCESSING), WE CAN GUARANTEE A FULLY TRACEABLE SHRIMP AND A YEAR-ROUND PRODUCTION.

RainForest Water RFW, S.A.

7.2B7-03(10)

Address: 哥斯达黎加 Costa Rica Heredia-Sarapiqui-Finca Campos Lapa Verde, La Esperanza, Puerto Viejo, Sarapiquí, Heredia, Costa Rica
Tel: 4000-8144
Email: roy@rainforestwater.com
Web: www.rainforestwater.com

RainForest Water is bottled at source and complies with the highest standards in quality control and international certifications

Piñaalbo De Alajuela S.A

7.2B7-03(13)

Address: 哥斯达黎加 Costa Rica Alajuela-San Carlos-5 K NORTE DE LA GASOLINERA DE PITAL. Cliente se maneja desde oficinas centrales.
Tel: (506) 2404-1511
Email: juan.bolanos@pinaalbo.com
Web: pinaalbo.com

We are a family business with national capital dedicated to producing and exporting yellow pineapple of excellent quality, respecting our environment and social environment. We are located in Pital de San Carlos, in the Northern Zone of Costa Rica, the birthplace of Costa Rican pineapple par excellence. The ideology with which we have always developed the company has been to protect our forests an

INDUSTRIA DE GRANOS DEL PERU S.A.C.

7.2B7-04(04)

Address: 秘鲁 Peru LIMA -LIMA-AV. SAN JUAN N° 1377 URB. SANTA MARTHA – ATE – LIMA.
Tel: 5117175581
Email: HTRISTAN@INDUSTRIADEGRANOS.COM.PE
Web: www.industriadegranos.com.pe

INDUSTRIA DE GRANOS DEL PERÚ S.A.C. IT IS A 100% PERUVIAN COMPANY THAT BEGAN OPERATING IN 2010, CONCERNED WITH PROVIDING ITS CUSTOMERS WITH NUTRITIOUS, NATURAL AND HEALTHY FOOD PRODUCTS (SUPERFOODS IN THEIR DIFFERENT DERIVATIVES) WITH HIGH QUALITY STANDARDS. MAINTAINING AS PILLARS: CONTINUOUS IMPROVEMENT, INNOVATION AND PROCESS STANDARDIZATION.

Thompson Coffee Company Ltda

7.2B7-03(11)

Address: 哥斯达黎加 Costa Rica Alajuela-Alajuela-Avenida 6, calle 15
Tel: (506) 2440-4060
Email: max@thompson.coffee
Web:

"Smile it's a Costa Rican Coffee" its comes from our best and worldwide recognized coffee region: Tarrazú, Costa Rica (Specialty Coffee)

INTERLOOM SAC

7.2B7-04(01)

Address: 秘鲁 Peru LIMA -LIMA-CALLE LOS CIPRESES 343, SAN ISIDRO
Tel: +51 1 311-1730
Email: FSANTISTEBAN@INTERLOOM.COM.PE
Web: www.interloom.com.pe

AS EXPORTER, WE COUNT WITH ORGANIC, KOSHER, BRC, GRASP AND GLOBAL GAP CERTIFICATE.WE ARE PERUVIAN COMPANY WITH MORE THAN 30 YEARS OLD OF EXPERIENCE, OFFERING A VARIETY OF FOOD PRODUCTS SUCH AS QUINOA, CHIA, AMARANTH, BLACK EYED, LIMA BEAN, PIGEON PEAS, MUNG BEAN, BROAD BEAN, ETC.WE EXPORTING DIFFERENT COUNTRIES AS USA, CANADA, SPAIN, GERMANY, FRANCE, KOREA, AUSTRALIA, ISRAEL, DUBAI, ETC.

SUPER SACHA INCHI

7.2B7-04(05)

Address: 秘鲁 SAN MARTIN-SAN MARTIN-MZA. X LOTE. X FND. VICTORIA (ALTURA DE LA CDRA 6 JR. SANTA EUFRACIA) SAN MARTIN - SAN MARTIN - LA BANDA DE SHILCAYO Peru San Martin-San Martin-Mza. x Lote. x Fnd. Victoria (Altura de la Cdra 6 Jr. Santa Eufracia) San Martin, San Martin, La Banda de Shilcayo.
Tel: +51-1-7783614
Email: abigail@go-peru.com
Web:

Super Sacha Inchi is a Peruvian company, dedicated to the cultivation, study, research, development and production of organic and natural foods such as the fruit of Sacha Inchi, among others, in order to promote healthy food worldwide, improving quality of life of the populations, and protecting the environment.

CHOCO PREMIUM S.A.C.

7.2B7-04(06)

Address: 秘鲁 Peru LIMA -LIMA-AV. PASEO LA CASTELLANA MZA. C LOTE. 3 DPTO. 401 - SANTIAGO DE SURCO
Tel: 51 968 212 112
Email: OGANDARILLAS@CHOCOPREMIUM.COM.PE
Web: www.chocopremium.com.pe

WE DESIGN SUGAR-FREE GOURMET CHOCOLATES, WITH MORE THAN 99% OF THE BEST COCOA IN THE WORLD (CUSCO). DIRECTED TO THE MARKETS: GOURMET, HEALTHY, 5 STAR HOTELS AND FINE PASTRY

CABZE S.R.L.

7.2B7-04(07)

Address: 秘鲁 LIMA -LIMA-STA BEATRIZ 145, SAN MARTÍN DE PORRES Peru LIMA -LIMA-STA BEATRIZ 145, SAN MARTIN DE PORRES
Tel: +51 1 5372069
Email: EDWINCZ_05@HOTMAIL.COM
Web: www.cabze.com.pe

CABZE, IS DEDICATED TO THE PACKAGING AND MARKETING OF PERUVIAN PRODUCTS. FOR MORE THAN 8 YEARS WE HAVE WORKED WITH EXCELLENT PROFESSIONALS REACHING THE ENTIRE LOCAL MARKET. ON THE OTHER HAND WE HAVE THE DEHYDRATED PROJECT UNDERWAY THAT INCLUDES FRUITS SUCH AS AGUAYMANTO, PINEAPPLE AND MANGO, DRIED YACON FLOUR, CAMU CAMU AND LUCUMA.

TUMI

7.2B7-04(08)

Address: 秘鲁 Peru Lima-Lima-Car. Autopista Panamericana Sur Km. 37.2 Mza. D1 Lote. 03a Zona A Pampas De Mamay (A La Altura Del Puente Arica) Lima - Lima - Lurin
Tel: +51-1-7783614
Email: abigail@go-peru.com
Web:

TUMI is a company dedicated to the cultivation, research, development, production and sales of green health and nutrition food, such as Maca, Quinoa, Sacha Inchi, Purple corn , among many others. The company is equipped with advanced technology, quality assurance, it can provide raw materials, finished products and joint development and other ways of cooperation.

XPODEKA

7.2B7-04(09)

Address: 秘鲁 Peru Callao-Calle Lambda 194 Parque Internacional de la Industria y Comercio
Tel: +51 1 4516175
Email: sales@xpodeka.com
Web: www.xpodeka.com

XPODEKA is a company dedicated to export andean grains since 2006, from Peru to the world , in differents presentations like Organic and Conventional Products.We hace Certifications like: Organic, HACCP, BRC (AA), KOSHER, FDA, SENASA.

AMARU LIMITED SAC

7.2B7-04(10)

Address: 秘鲁 Peru Lima-Miraflores-Av. Grau 676 5B
Tel: 999099500
Email: eduardo.carrillo@amarunaturals.com
Web: www.amarunaturals.com

We source our products from our unique microclimates in all 3 geographical regions of Perú.Striving to bring you the freshest on season product available.Working directly with producers is how we ensure quality and protect our fine standard.
In the same manner making our modus operandi sustainable and inclusive with each family and their communities.

CAMPOSOL S.A.

7.2B7-04(11)

Address: 秘鲁 Peru LIMA-LIMA-AV. EL DERBY NRO. 250 URB. EL DERBY DE MONTERRICO (PISO 4) SANTIAGO DE SURCO
Tel: 51 1 634 7100
Email: JGOMEZ@CAMPOSOL.US
Web: www.camposol.com.pe

CAMPOSOL IS VERTICALLY INTEGRATED COMPANY THAT OFFERS HIGH QUALITY HEALTHY AND FRESH FOODS TO CONSUMERS AROUND THE WORLD. THE COMPANY HAS THREE BUSINESS AREAS: FRUIT & VEGETABLES, MARINASOL AND CAMPOSOL INTERNATIONAL, ITS COMMERCIAL DIVISION.

FRANCESCA BRANDT SWISS

7.2B7-04(12)

Address: 秘鲁 Peru SWITZERLAND-SCHLOSSRUED -REBACKERSTR 281, 5044 SCHLOSSRUED
Tel: 0041 62 721 28 12
Email: INFO@FRANCESCABRSWISS.CH
Web: www.francescabrswiss.ch

GOOD QUALITY THAT EVERYONE CAN AFFORD.

FRUCTUS TERRUM S.A.

7.2B7-04(13)

Address: 秘鲁 Peru LIMA-LIMA-CAL.DOS NRO. 199 URB. CORPAC (A DOS ESPALDAS DE CLINICA R.PALMA) LIMA - LIMA - SAN ISIDRO
Tel: 51 1 252 1276
Email: MARMEJO@FRUCTUSTERRUM.COM
Web: www.fructusterrum.com

PERUVIAN COMPANY DEDICATED TO CREATE INNOVATIVE FOOD AND INGREDIENTS FROM PERUVIAN SUPERFOODS AND SPICES

ALISUR S.A.C.

7.2B7-04(14)

Address: 秘鲁 Peru LIMA -LIMA-JR. SACO OLIVEROS NRO. 295 DPTO. 804 URB. SANTA BEATRIZ
Tel: 0051 1 500 5850
Email: CTORRESLLOSA@VALLESOL.COM
Web: www.alisur.net

WE ARE A COMPANY DEDICATED TO THE COMMERCIALIZATION OF QUINOA IN THE INTERNATIONAL MARKET AND CUSTOMER SERVICE. OUR POLICY OF CONTINUOUS IMPROVEMENT, CONSTANT TECHNOLOGY AND A TRAINED HUMAN TEAM ALLOW US TO BE THE LEADERS IN OUR INDUSTRY.

GLOBENATURAL INTERNACIONAL S.A.

7.2B7-04(15)

Address: 秘鲁 Peru LIMA -LIMA-ALM. SAN MARCOS NRO. 1455 URB. HUERTOS DE VILLA (AL COSTADO DE LA GRANJA VILLA) LIMA - LIMA - CHORRILLOS
Tel: 51 1 254 6138
Email: ATELLO@GLOBENATURAL.COM
Web: www.globenatural.com

GLOBENATURAL IS A SUPERFOOD COMPANY CONSIDERED WITHIN THE FIVE MOST IMPORTANT ANDEAN GRAINS EXPORT ENTERPRISES IN PERÚ WITH OVER 25 YEARS OF EXPERIENCE AND EXPORTING TO OVER 30 COUNTRIES, WITH SPECIAL FOCUS ON SOCIAL RESPONSABILITY AND ALWAYS PROVIDING THE BEST QUALITY IN OUR PRODUCTS TO OUR CUSTOMERS WORLDWIDE.

IMPORT & EXPORT IZAM SAC

7.2B7-04(16)

Address: 秘鲁 Peru LIMA-LIMA-AVENIDA ANDRES AVELINO CACERES MZ J LT 1, SECTOR RUSTICO SAN EUGENIO DE HUACHIPA – LURIGANCHO – LIMA
Tel: +511 438 9189
Email: CROJA@IZAMGROUP.COM
Web: www.izamgroup.com

IMPORT & EXPORT IZAM IS A PERUVIAN COMPANY WITH 5 YEARS EXPORTING AND TRADING ANDEAN GRAINS, DERIVASTES, SUPERFOODS. ETC OUR MAIN QUALITY IS TO WORK CLOSELY WITH THE FARMERS, WE ASSIST THEM IN SOWING SEASONS, THE HARVEST SEASON THROUGH THE DELIVERY OF SEEDS CONTRIBUTING IN THIS WAY TO THE IMPROVEMENT OF THE LIVING CONDITIONS OF RURAL COMMUNITIES

SOUTHERN CORPORATION S.A.C

7.2B7-04(17)

Address: 秘鲁 Peru LIMA -LIMA-AV. LA MOLINA NRO. 1167 INT. 247
Tel: +51 1 7769032
Email: YUBITZA@SOUTHEN-CORPORATION.COM
Web: www.southern-corporation.com

SOUTHERN CORPORATION IS AN EXPORTER OF NATURAL PRODUCTS. GARDEN CARE IS THE NAME OF YOUR BRAND AND WITH IT THEY CREATE INNOVATIVE NATURAL PRODUCTS, IN ORDER TO PROMOTE HEALTH AND PROMOTE THE CONSUMPTION OF PERUVIAN FOODS IN THE WORLD.

PT. KAPAL API GLOBAL

7.2B7-05

Address: 印度尼西亚 Indonesia DKI JAKARTA-JAKARTA PUSAT-JALAN TAMAN JATIBARU BARAT NO.1-3
Tel: +62213503881
Email: yowan@kapalapi.co.id
Web: kapalapiglobal.com

火船集团一直致力于印度尼西亚食品和饮料行业的发展。该集团由七个子公司组成，我们的核心业务是各自互补，共进发展。该集团旗下包括了咖啡的种植和生产企业，糖果制造企业，植脂末制造企业，本地分销公司，咖啡零售和咖啡机生产商。
Kapal Api Global is one of Indonesia's leading food and beverage companies.The group consists of seven subsidiaries,each complementary to our core business or is a leader in its own segment.

马蒂诺罗西股份有限公司 / MartinoRossi SpA

7.2B7-06

Address: 意大利 克雷莫纳-Gadesco Pieve Delmona -Via Martiri della Libertà, 50 Italy Cremona-Gadesco Pieve Delmona-Via Martiri della Libertà 50
Tel: +39 0372 58131 / 0039037258131
Email: info@martinorossispa.it
Web: www.martinorossispa.com

马蒂诺罗西公司专业生产谷物及豆类健康食材：面粉、半成品。被转化的原料来自全控制的供应链，从种子的选择开始，保证完整的可追溯性和高食品安全性。公司的食材原料带来了一系列用豆子面粉制作的创新产品，面向注重健康饮食的消费者。
MartinoRossi is a company specialized in the production of healthy cereals and legume ingredients.The transformation of raw materials grown in controlled supplychain from seeds selection guarantees complete traceability and high food security. A line of innovative products are created with its legume ingredients dedicated to an attentive consumer.

ITALIAN COOPERATIVE'S TRADE SRL COOP

7.2B7-07(02)

Address: 意大利 Italy Italy-Milan-Viale Famagosta 75
Tel: 00393397479250
Email: info@coopitalyasia.com
Web: www.coopitalianfood.com

COOP Italian Food is the international branch of Coop Italy created to export the excellence of Italian food worldwide. Coop the first among Italian retailers with a history of over 160 years behind it. Price competitiveness and high attention to quality are the core of COOP strategy and its success

ITALIAN SPIRIT ADV S.R.L.S.

7.2B7-07(03)

Address: 意大利 Italy ITALY-ROME-VIA EURIPIDE,109
Tel: 0683806585
Email: office.italianspirit@gmail.com
Web: www.italianspirit.it

We are a third generation of liquor producer Italian Company, targeted on middle/high level., with more than 500 receipts .We also distribute some of italian best products abroad, like pasta, parmesan, chocolate, wine, truffles, chewingum and so on

ASSEGNATARI ASSOCIATI ARBOREA SOCIETA' COOPERATIVA AGRICOLA PER AZIONI

7.2B7-07(04)

Address: 意大利 Italy OR-ARBOREA-STRADA 14 EST BIS
Tel: +39 0783804001
Email: export@arborea.it
Web: www.arborea1956.com

阿尔博雷阿是一个坐落于美丽的意大利撒丁岛上的乳制品工厂，以其60年以来的丰富经验，专注于最好的乳制品生产加工。
Arborea The Italian Dairy Company since 1956 is a dairy company from the beautiful Italian island of Sardinia. With over 60 years of experience, it is specialised in the production of the authentic milk and dairy products.

CASA OILIO SPERLONGA S.P.A.

7.2B7-07(06)

Address: 意大利 Priverno-Priverno-Via Madonna delle Grazie, 54 04015 Priverno, LT Italy Italy LT-Priverno-Via Madonna delle Grazie, 54 04015 Priverno, LT Italy
Tel: +39 (0773) 1705171
Email: shanyin@sperlonga.com
Web: www.sperlonga.net.cn/index-en.php

Beginning in 1863, Mr. Sperlonga devoted his life to taking care of the olive-tree land he inherited from his ancestors.Today, the third generation of Olive growers, Domenico Sperlonga, the original founder's grandson, is proud to still be wortking with Olive Oils.

Arch Srls

7.2B7-07(07)

Address: 意大利 MI-Milano-via domokos n.4, 20147, Milano, MI, Italy Italy MI-Milano-via domokos n.4, 20147,
Tel: 00393923640223
Email: info@arch-srl.com
Web: www.arch-srl.com

ARCH公司的主要业为客户进行品牌定制，已经建立了一个成熟完整的高级品牌包装供应链。此外还向海外市场介绍和推广意大利品牌，如食品，香水等。这次我们带来的品牌缔造魅丽®，它是意大利百年悠久历史的减肥食品和营养品品牌。公司与帕多瓦大学和国际科研机构深入合作，持有多项专利和欧洲有机产品认证。产品以含有至少十种药用植物萃取而著称，“十植疗法”系列的产品无酒精，无糖，无防腐剂，无麸质的特点。
ARCH company customize product for Brands, has established mature and complete supply chain for high-level packing, also we introduce and promote Italian brands to overseas markets. We introduce the brand TISANOREICA®. It is century-old history of Italian diet food and nutrition supplement, The product is well-known for Decottopia® are alcohol-free, sugar-free, preservative-free and gluten-free.

老挝康华投资有限公司 / Kanghua Investment Co., LTD

7.2B8-06

Address: 老挝 万象市占塔波里西沙瓦村 Laos Sysavad village, Chathaboury District, Vientaine capital
Tel: 13762285848
Email: 173918629@qq.com
Web:

Kanghua Investment Co., LTD do business about Furniture from wood, Lao Original Organic Tea for export to China and ASEAN countries, and real estates.

Grapes International Investment, Lda

7.2B8-09

Address: 葡萄牙 Portugal Lisbon-Lisbon-Av da Liberdade 262, 1ºDto
Tel: 15811172711
Email: 672027236@qq.com
Web:

Grapes International Investment来自葡萄牙，位于里斯本市中心的主要大道Avenida da Liberdade，是一家拥有多种业务的公司，其中包括红葡萄酒、白葡萄酒和橄榄油进出口。
我们的目标是提供高质量，专业和可靠的服务，寻求长期的商业客户并建立合作伙伴关系。
Grapes International Investment, comes from Portugal, located in Avenida da Liberdade, the main avenue in the center of Lisbon, is a company with various activities,which includs import and export of red wine, white wine and olive oil.
Our goal is providing high quality, professional and reliable service, seeking long-term business customers and getting partner relationships.

VILLA REMOTTI / Wallrose srl

7.2B7-07(08)

Address: 意大利 Piemonte-FUBINE MONFERRATO -STRADA PRIVATA REMOTTI Italy Milano-Milano -viale Biancamaria 13
Tel: +39 335 656 0624
Email: villaremotti@yahoo.it
Web: villaremotti.it

Villa Remotti is an artisanal, specialized producer of Barberad'Asti. Their philosophy is simple: only the best vineyard practices, and the outmost attention to detail in winemaking, will yield wines with unique character and flavor profile.

Green Gold Ethiopia PLC

7.2B8-07

Address: 埃塞俄比亚 Ethiopia Addis Ababa,Ethiopia-Addis Ababa
Tel: +251115572553
Email: greengoldeth@gmail.com
Web: www.greengoldethiopia.com

Green Gold Ethiopia PLC The Company Named after coffee bean, arguably the most recognized farm produce in the world, Green Gold Ethiopia is a company prominently thriving in Holistic Coffee Entrepreneurship. Among the most qualified and longest experience in the industry the company is currently going through exponential expansion in owning and running: www.greengoldethiopia.com

Frezco Beverages Pte Ltd

7.2B8-10

Address: 斐济 Fiji Nadi-20 Waqadra Estate
Tel: 021-61000338
Email: fijipavilion@lovefiji.com
Web: www.lovefiji.com

The Fiji Islands are located in paradise waters of the South Pacific.Fijian Noni herbal juice is a true daily supplement from the propical forests and nuclear free islands of Fiji.Fijian Noni juice from the Paradise Islands of FIJI is also known as "Kura" buy the more than 2000 years in the Fiji Islands as a daily supplement for good health-conscious lifestyles.

SAVINI TARTUFI SRL

7.2B7-07(09)

Address: 意大利 Italy PI-PALAIA-VIA MEUCCI LOC.MONTANELLI
Tel: 0587628037
Email: export@savinitartufi.it
Web: www.savinitartufi.it

The company has been dealing with truffles for 4 generations. We hunt, collect and receive fresh truffles all year long. Along to this activit we sell truffle products which we have developed thanks to our experience and know how.

PRIETO, S.A. DE C.V.

7.2B8-08

Address: 萨尔瓦多 El Salvador San Salvador-77 Avenida Norte No.100, Colonia Escalón
Tel: +503-2209-4400
Email: ramaya@prieto.com.sv
Web:

Our company Prieto S.A de C.V. has more than half a century of being in the business of producing, benefiting and exporting coffee, thanks to the vision that Don Federico García Prieto had, establishing farms in the area of the Chaparrastique Volcano located in the Department of San Miguel, which has excellent climate and and soil characteristics for the production of good quality coffee.

株式会社本目浅吉商店 / Homme Asakichi Shoten Co., Ltd.

7.2B8-11

Address: 日本 Japan Shizuoka city-Anzai-3-65
Tel: +81-54-271-1352
Email: hommecom@mail.wbs.ne.jp
Web:

Homme Asakichi Shoten Co., Ltd. has improved our tea since 1868. We acquired ISO9001 certification, Organic JAS certification, and Halal certification. For many years, we have received many several awards from international tea contest. We handle a variety of Japanese teas, and all tea can be sold as loose tea leaves, teabags or powder, from high-quality personal gifts to industrial products.

Ecolite Biotech Manufacturing Sdn Bhd

7.2B8-12

Address: 马来西亚 Malaysia Johor-Batu Pahat-Lot 9284 & 9285, Jalan Yong Peng, Sri Medan
Tel: +86 13817380083
Email: andy.chenkai@hotmail.com
Web: www.ecolite.com.my

身为一家来自马来西亚的健康食品公司，我们运用对滋补类中药的专业知识，致力于提供一系列多元化的健康产品。以简单便捷的方式，和大众一齐拥抱健康，活出精彩。我们以天然出发，全力投入最好的原料并结合传统智慧及现代科学，确保研发出食用便捷、优良有益的配方。目前我们推出了燕窝、胶原蛋白燕窝饮、补腰精、鸡精、枇杷膏、白凤丸、健康补给品、干草药及其它健康食品。
Ecolite is a health and wellness company, passionate about providing nourishment to help people be well and committed to making nourishment accessible in simple and convenient ways.We are highly dedicated to manufacturing the best possible ingredients into formulations derived from traditional wisdom and that are concluded trough modern science to ensure they are beneficial to consume.

FORT SANCTUARY PTE LTD

7.2B8-15

Address: 新加坡 Singapore SINGAPORE-SINGAPORE-8 RAFFLES AVENUE, #02-04 ESPLANADE MALL, SINGAPORE 039802
Tel: 90668635
Email: echirp@yahoo.com
Web: www.fortsanctuary.com

Fort Sanctuary has been producing some of world's finest teas from our facility in Tuas, Singapore, since 2014. After years of research, our cutting edge tea processing expertise is applied to best ingredients to deliver exquisite texture and full potential of tea leaves in terms of expression of terroir and flavor. Our work is showcased in Esplanade, a Singapore icon.

TENUTA SANTA LUCIA S.S

7.2B8-18

Address: 意大利 Italy RIETI-POGGIO MIRTETO-LOC.SANTA LUCIA SNC
Tel: 0765/24616
Email: italia.newlife@hotmail.com
Web: www.tenutasantalucia.com

圣露琪亚庄园，占地45公顷，自然条件得天独厚，酿造多种高品质的葡萄酒。圣露琪亚庄园的葡萄酒，多次在意大利和欧洲国家举办的葡萄酒展览会上获得奖项，备受专业品鉴机构的推崇。圣露琪亚庄园庄主Fiorelli女士，因其在葡萄酒事业上取得的成就，于2018年，被意大利VINITALY葡萄酒展授予个人成就最高奖项。圣露琪亚庄园，与WSET专业教员合作，教授各个等级的国际葡萄酒评鉴课程，弘扬葡萄酒文化。
With the knowledge and the love for viticulture and winemaking, the Wine Manor Santa Lucia has been committing in the production of different types of high-quality wine: Montepulciano, Cabernet, Alicante, Carignano, Falanghina, Sauvignon and Malvasia. In 2018, the owner Ms. Fiorelli Gabriella was awarded the highest award for personal achievement winemaking by the Italian VINITALY Wine Show.

SunRay Business Service Co.,Ltd

7.2B8-13

Address: 日本 Japan Tokyo-Tokyo-Nihonbashihamacho, chuo-ku #202,3-23-8
Tel: 03-3527-2616
Email: y.kong@sunraybs.co.jp
Web: www.sunraybs.com

SunRay Business Service was found in 2017. Our main business area is exportation of Japanese goods such as sake, sweets, supplements, cosmetics, and ingredients. Currently we place importance on sake exportation. Our strength is that we have ties with various local entities, enabling us to communicate with over 20 breweries directly. Also, we have been producing our own sake.

MC SRL

7.2B8-16

Address: 意大利 Italy Bari-Corato-Contrada Forchetto Z.I.70033 Corato (BA)
Tel: 080 8983449
Email: info@mcgroup.biz
Web:

FOOD AND NON-FOOD SUPPLIER

IN.CON.TRA. SRL

7.2B8-19

Address: 意大利 Italy MN-PORTO MANTOVANO-VIA LONDRA 14
Tel: +390376408048
Email: f.fortunati@incontra.net
Web: www.incontra.net

INCONTRA specialises in trading livestock and meat worldwide. Our expertise and experience span every key aspect of the meat production and trading cycle.

D-ROUND PTY LTD

7.2B8-14

Address: 澳大利亚 Australia Victoria-Clayton South-Unit 22 / 3 Audsley Street
Tel: +61421115636
Email: frank.dround@gmail.com
Web:

D-ROUND PTY LTD是一家澳大利亚公司，主要从事澳洲产品的经销。
现公司将自主品牌OLIEY牛奶粉带给中国消费者，让您不出国门就可以享受到来自澳大利亚的100%原生态奶，高钙，无防腐剂的牛奶粉，为您的家人提供营养需要，保持健康！
此牛奶粉由始建于1893年的百年老厂荣誉出品，奶源来自于南纬37度的世界黄金奶源地—澳大利亚维多利亚州的南吉普斯兰。
D-ROUND PTY LTD is an Australian company that specializes in the distribution of Australian products.
Now the company is going to bring its own brand--OLIEY milk powder to Chinese consumers, so that you can enjoy 100% original milk, high calcium and preservative-free milk powder from Australia without going abroad, to provide nutritional needs for your family and keep healthy!

Olearia Clemente s.r.l.

7.2B8-17

Address: 意大利 Italy Italy-Manfredonia-Via Giovanni Agnelli
Tel: 00390884543955
Email: raffaele.disabato@olearia clemente.it
Web:

The Olearia Clemente is a company involved since 1895 in the selection and production of high quality extra-fine olive oil. This comes exclusively from the Gargano territory (presently a National Park). It is processed with traditional methods, which preserve the nutritious value, and ensures the absolute authenticity of the product.

MOROLA Caffe Italiano / APULIA VENDING

7.2B8-20

Address: 意大利 Italy TA-Martina Franca-Via Alessandro Fighera 101
Tel: +390804803134
Email: pino@morola.it
Web: www.morola.it

Morola coffee blends are born from a careful selection of the best qualities of coffee skillfully roasted in Italy.Their unique taste can be appreciated in every single cup of Morola Caffe' "espresso". Availble in beans, powder, single portions and many others...

Landino srl

7.2B8-21

Address: 意大利 Italy MI-Milano -Via gustavo Fara 39
Tel: +86 13917702324 / +39 3331770169
Email: hd@hdad.cn
cyq411@outlook.it
Web: landinoitalia.it

致力于中意经济贸易，艺术文化交流，搭建中意高端商务经贸和交流展示平台，从事意大利产品对华出口贸易，促进中国市场与意大利品牌和产品的对接，为意大利中小企业进入中国市场提供全方位的服务

Committed to Sino-italian economic and trade, art and cultural exchanges, build Sino-italian high-end business, trade and exchange display platform, exporting italian products to China. Promote the Chinese market and Italian brands and products, and provide comprehensive services for italian smal and medium -sized enterprises to enter the Chinese market.

Antonio Gonzalez SA

7.2C1-01

Address: 阿根廷 Argentina Ciudad de Buenos Aires-caba-Jose Cubas 2729
Tel: +5411 4574 2767
Email: jimena.bruyere@vinosgalan.com
Web:

Antonio Gonzalez SA is a family company, who has started in the early fourties With more than 600 hectars in the main areas of Mendoza, near the mountains that guarantee the best quality in each glass of wine.Our big capacity allowed us to cover the internal market and focus on export to different countries, mainly China

ROLAND PTY LTD (AUSTRALIA)

7.2C1-03

Address: 澳大利亚 Australia NSW-WAHROONGA-29 ROLAND AVENUE
Tel: +61 2 9756 5395
Email: shengli1988@hotmail.com
Web: www.au-roland.com

Roland Pty Ltd is an import & export wholesaler which was established in 2003. Since then, it has engaged in importing fine products from overseas selling to Australian major retails and exporting Australian food and beverage products to overseas for many years. It has sold and recommended many kinds of healthy, natural and organic Australian food products and beverages to its overseas customers.

Photos Photiades Breweries LTD

7.2C1-04

Address: 塞浦路斯 Cyprus Nicosia-Nicosia-1 Lemesos Ave.
Tel: +357 22 585894
Email: eva.christodoulou@photiadesgroup.com
Web: photiadesgroup.com

The Group entered the beverage production in 1968, when it first started brewing Carlsberg Beer in Cyprus. Since then, the Group has been active in the production of several beverages. LEON Beer, AGROS Water and Kyperounda Wines are the Group's strategic products and primary growth drivers.The Group has recently invested EUR 10M for brewery expansion.

Byron Investments Limited

7.2C1-05

Address: 斐济 Fiji Suva-Level 6, FNPF Place, Victoria Parade
Tel: 679 3312144
Email: gracebingbingchai@gmail.com
Web: www.fijibeers.com

Byron Investments Limited based in Suva, the capital of Fiji is one of the participants of 1st CIIE. It is focusing on promoting Pacific Islands economic development especially Fiji Islands through building economic links for Pacific businesses to the world's second largest economy, China, aiming to create more opportunities to enhance Brand "South Pacific Islands" in China.

Fecovita Coop.ltda

7.2C1-06

Address: 阿根廷 Argentina Mendoza-265 - Gutierrez-Maipú - Mendoza – ARGENTINA
Tel: 18911237376
Email: ciwu2014@126.com
Web:

FeCoVitA is increasingly focusing on positioning its products in higher price segments. As a consequence, it is developing its Estancia Mendoza line, which is positioned as a mid-priced product, while in December 2015 it bought the Huarpes winery.Product coverage: Beer, Cider/Perry, RTDs/High-Strength Premixes, Spirits, Wine.

LE CLUB DES MARQUES SAS

7.2C1-07

Address: 法国 France PLEIN-GERS-1334 Avenue d'Aquitaine 40190 Villeneuve de Marsan
Tel: 0592-5517610
Email: 1035998476@qq.com
Web: www.armagnac-cdm.fr

古老的克雷德酒庄“克雷德”，热尔这片火热而粗粝的土地，孕育 了满满的贵族精神和优雅传统。我们酒庄的第一批“生命之水”雅文邑出生、孕育于公元14世纪。1774年，热尔省中部村庄-庞亚思(Panjas)的一位老师——保尔•巴依克拉，他开始蒸馏葡萄酒，为酒庄书 写了第一篇章。老年份雅文邑来自单一年份采摘 每一款年份酒的味道都有细微的区别，从更多的花香到更多的成熟葡萄酒特有的味道，回味无穷。

L'histoire des Armagnacs Clés des Ducs se confond avec celle de l'Armagnac, de cette terre ardente et rude où s'enracine toute une tradition de noblesse et d'élégance. Les premières eaux-de-viey apparaissent dès le XVème siècle. Tout commence en plein cœur du Gers, au village de Panjas.

TENUTE PICCINI S.P.A. / TENUTE PICCINI SPA

7.2C2-01

Address: 意大利 Siena-Siena-意大利 Italy Siena-Siena-Italy
Tel: +39 0577 540143 / 3203382930
Email: xia@tenutepiccini.it
Web: tenutepiccinispa

始于1882年，四代相传的意大利酒庄。
Started from 1882, four generation, Italian winery.

ASTRON CONNECT INC.

7.2C2-02

Address: 加拿大 Canada BC-VANCOUVER-2368-666 BURRARD ST.
Tel: 6043701717
Email: yingz@sachielwaterinc.com
bein@astronconnect.com
Web: astronconnect.com

Astron Connect专营食品和饮料产品行业。旨在将加拿大的安全食品和饮料生产商与新兴市场的买家连接起来。公司的愿景是在全球范围内建立安全的品牌体系。公司已在多伦多证券交易所创业板（TSXV）上市，代码为AST.V。

Astron Connect specializes in food and beverage products. It seeks to connect authentic Canadian food and beverage producers with buyers in emerging markets. Astron Connect’s focus is establishing safe and authentic brands on a global scale. Astron Connect trades on the Toronto Stock Exchange Venture (TSXV) under the symbol AST.V.

Goonawarra Enterprise Pty Ltd

7.2C2-03

Address: 澳大利亚 Australia 790 Sunbury Road
Tel: +61 3 9417 3998
Email: emma.luo@jsglobal.com.au
Web: www.goonawarra.com.au

古纳瓦拉酒庄始建于1863年，由澳大利亚维多利亚州第一任州长弗朗西斯科所建造。拥有超过150年历史的古堡酒庄是澳洲历史文化遗产的一部分，深受墨尔本当地人的喜爱，是举办婚庆、典礼、宴会的热门场地。Goonawarra Enterprise现已拿到规划开发许可，将斥巨资以酒庄为基础兴建综合度假村。规划中的Goona Warra度假村将由五星级精品酒店、高级餐厅、好莱坞明星俱乐部、多功能活动中心组成。

Goona Warra Vineyard was founded by a Victorian Premier in 1863. With a history of 156 years, the winery has become an exceptional wedding and other function venue with a strong food and wine orientation. Goona Warra Enterprise has obtained the planning permit for developing the winery into a luxury resort.

INTERCAFE BURUNDI

7.2C2-05

Address: 布隆迪 Burundi Bujumbura-Bujumbura-ROHERO QR, AV NGENDANDUMWE BUJUMBURA Burundi Africa
Tel: +257 22276707
Email: habonimana.boniface@gmail.com
Web:

InterCafé-Burundi is an Interprofessional Association of all Burundi Private Coffee Stakeholders. It is a strategic framework of decision making and orientation of coffee sector. Its main goal is to provide extension services to all stakeholders, promote and market the "Café du Burundi" coffee brand. This Arabica Bourbon Coffee dates from 1930; its coffee,grown at 1200 to 2000 m altitude.

(SODIBA)安哥拉饮料生产和分销公司 / SODIBA - Sociedade de Distribuição de Bebidas de Angola, Lda

7.2C2-07

Address: 安哥拉 Angola luanda-Morro Bento-E5 Piso 1 • Shopping Avennida • Av. Pedro de Castro Van Dunnen Loy
Tel: 025 86495639
Email: zznwto123@hotmail.com
Web: www.sodiba.co.ao

我们是一家安哥拉的饮料生产很分销公司，我们在安哥拉首都罗安达的工厂占地40公顷，年产量1.44亿升，有着最先进的啤酒和软饮料生产线。我们有自己新推出的品牌"LUANDINA"啤酒，目前已经出口到中国、葡萄牙、南非及圣多美普林西比等国家。我们正努力的将非洲新兴的工业产品以国际的标准推向全世界。

We are an Angolan company that produces and distributes beverages.Our main focus is to produce beer.we have our own beer brand"LUANDINA",100% Angolan products.Our beers already exported to China since 2018.

ABADA Trade LLC

7.2C2-08

Address: 吉尔吉斯斯坦 Talas region-Kyzyl-Adyr-42 Lenin street Kyrgyzstan Talas region,-Kyzyl-Adyr,-42 Lenin street,
Tel: +996779709399
Email: abada_trade@mail.ru
Web: www.kyrgyzbeans.com

ABADA Trade LLC is one of the largest suppliers and exporters of agricultural products in Kyrgyzstan since 2004. Our main products are red kidney beans, red speckled kidney beans, light speckled kidney beans, white kidney beans, green lentils, whole and split peas, mung beans and walnuts.

Ches LTD

7.2C2-09

Address: 吉尔吉斯斯坦 Kyrgyzstan Bishkek-Baytik Baatyra str. 16a
Tel: +996700116666
Email: usen5@mail.ru
Web:

At Ches LTD.,our main goal is to provide our customers with high-quality products in many different areas of production.Our company exists since 1992 and our factory that is located in the capital of Kyrgyz Republic is working continuously every day.Some of the products we would like to present on this EXPO are:drinks,bakery products,honey. Our goal is to find Chinese companies for cooperation.

Nocturne LLC

7.2C2-10

Address: 吉尔吉斯斯坦 Kyrgyzstan Chui-Bishkek-Frunze street 553/63
Tel: +996554898899
Email: Balarykg@gmail.com
Web: www.balary.kg

Balary is the new distinctive honey brand. The main product of Balary is white and sainfoin honey, which was recognized as one of the best honey and received many distinctive awards. We are the first company in Kyrgyzstan who export honey . Balary company won "the best honey export company of Kyrgyzstan " at 2018 and won many other awards at Gulfood countries where we mostly export

CAPE PENINSULA COMMODITIES TRADING

7.2C2-11

Address: 南非 South Africa CAPE TOWN-SOUTH AFRICA
Tel: +（86）21-52060167
Email: lihuangsh@163.com
Web:

south africa wines

ASENIA

7.2C2-12

Address: 喀麦隆 Cameroon Center-Yaounde-BP 35278
Tel: 00237 656856479
Email: andelacarine1@gmail.com
Web:

The ASENIA association works to promote young and women's entrepreneurship and share the same opportunity for popularisation of products 'Made in Cameroon'around the world.It works with Cameroonian producers.For the CIIE 2019, ASENIA will be accompanied by 3 Cameroonian Companies: AFRI BIO PROD, B-combel sarl AND build agro Development Area sarl.

SUNSHINE TOP

7.2C2-18

Address: 澳大利亚 Australia Queensland -Gold Coast-U38, 3 JACKMAN ST, SOUTHPORT
Tel: 0755916988
Email: 1228456238@qq.com
Web: www.sunshinetop.com.au

SUNSHINE TOP Company is located in sunny and beautiful Australian Gold Coast, and owns several farms with the total area of 188300 acres. The farms locate in Queensland and New South Wales. Sunshine Top takes honey and goat milk which are special agricultural products in local area as the main raw materials to produce the "Sunshine Top" brand milk goat , natural honey and relevant products.

SAAGRY CAMEROON

7.2C2-20

Address: 喀麦隆 Cameroon LITTORAL/ CAMEROON-DOUALA-P.O BOX 15170
Tel: 00237 699829643
Email: saagry@yahoo.fr
Web:

SAAGRY Cameroon is specialised in the production and marketing of refined palm oil, household soap and dervived products for industrial use (fatty acid and stearin). During CIIE 2019 SAAGRY would like to be in touch with chinese companies willing to buy products and invest in projects.SAAGRY will attend CIIE with HABIBA NATURAL CARE, AGRIFOOD&BEVERAGES, AFRI BIO PROD, B-COMBEL, BUILD AGRO INDUST

加拿大果莓集团 / CANADA BERRIES ENTERPRIES LTD.

7.2C3-03

Address: 加拿大 Canada BC-RICHMOND-12791 Blundell Road
Tel: 18969090683
Email: 112241281@qq.com
Web: canada-berries.ca

加拿大果莓集团位于加拿大BC省，距温哥华国际机场约15分钟车程，坐落在美丽天然的雪松建筑内，我们秉持原产地、原材料，原生态的理念，努力打造全球最好的果莓精华产业，集团旗下有加拿大果莓酒庄、加拿大果莓联合公司，以及果莓庄园等。加拿大果莓酒庄是集研发、生产、体验，销售于一体的全加最具规模，最具权威的特产酒庄，生产出世界上第一瓶干性、无添加、养生保健蓝莓酒，酿酒工艺沿用至今，成为加国蓝莓酒业的首选品牌。Within the winery of a beautiful natural cedar building, settled in the heart of BC's richest agricultural lands, Canada Berries offers one of the largest selections of berry wines. Our winemaker is committed to producing the best fresh fruit and berry wines, which is evident in our many award winning table wines.

Yerevan Brandy Company

7.2C3-08

Address: 亚美尼亚 Armenia Yerevan-2 Admiral Isakov ave.
Tel: +37410510100
Email: harutyun.isayan@pernod-ricard.com
Web: www.araratbrandy.com

Yerevan Brandy Company is the exclusive producer of ARARAT brandies and the direct successor of Armenian brandy making traditions established back in 1887. YBC produces world’s N1 exported Armenian brandy ARARAT, ranked in the TOP 5 in the imported brandies worldwide. ARARAT Brandies are 100% authentic Armenian product that is exported 40 counties and meet the highest international standards.

AZIENDA GUIDO F. FENDI SOCIETA' AGRICOLA A R.L.

7.2C3-01

Address: 意大利 Italy ROME-ROME-VIA CASSIODORO, 1/A
Tel: +390668801183
Email: guidoformilli@mclink.it
Web:

The Azienda Guido F. Fendi company was born from the idea of creating wines in which we wanted to express at best the territorial characteristics of the Maremma and Trentino, starting from: Territory, grape variety and professional experience. The first born are two white Vermentino wines, Chicca and Burattini, two red Sangiovese wines, Idillio Maremmano and Burattini and the TRENTODOC Sarò Franca

NC COCONUT CO., LTD.

7.2C3-04

Address: 泰国 Thailand Ratchaburi-Damnernsaduak-89 MOO12
Tel: +66898436798
Email: marketing@nccoconut.co.th
Web: www.nccoconut.co.th.co.th

NC COCONUT CO.,LTD. was established in 1996, in Ratchaburi province,Thailand. Our products are natural and harvested from finest selection area. Our NamHom coconut water are natural, uniquely fragrant and tasty. Our factory is certified with international standard by achieved GAP, GMP, HACCP,BRC, HALAL certificated.

澳大利亚诺瓦酒庄 / Nova Vita Investment Pty Ltd

7.2C3-09

Address: 澳大利亚 Australia South Australia -Henley Beach-46 East Terrace
Tel: +61 0420388123
Email: bill@novavitawines.com.au
Web: www.novavitawines.com.au

诺瓦酒庄是一家位于南澳大利亚的精品酒庄。酒庄主卡臣家族曾在欧洲拥有上百年的葡萄种植和酿酒历史。酒庄Nova Vita为拉丁文，译为“新的生活”，寓意卡臣家族离开欧洲后在澳洲大陆开始新的生活。酒庄拥有的超过85公顷葡萄园，及年产上百万瓶葡萄酒的酒厂。多个酒款在各式的酒展上获得奖项，受到酒评家的好评，被澳洲葡萄酒泰斗詹姆斯哈利迪（James Halliday）评为五星酒庄。
Nova Vita Wines is family winery from South Australia focus on producing high quality wine. 'nova vita' means 'new life'. The Kozned family has hundreds of years of grape growing and wine making history back to Europe. It owns over 85 hectares of vineyard winery can produce millions bottles of wine each year. It's a 5 star winery. The wines has been sold in major international markets.

Royal Fortune International (Canada) LTD(FOOD)

7.2C3-02

Address: 加拿大 Hamilton-202 Hepburn Grescent Hamilton ON L9C 7T3 Canada Hamilton-202 Hepburn Grescent Hamilton ON L9C 7T3
Tel: 18605358085
Email: carlosbinliu@hotmail.com
Web:

我公司主要研发、代理、分销加拿大知名品牌的酒水饮料、食品、农副产品，面向市场以中国大陆为主，同时覆盖香港和东南亚地区，年销售额在3000-4000万人民币之间。
Our company mainly develops, agents and distributes well-known Canadian brands of drinks, beverages, food, agricultural and sideline products. Mainland China is the main market-oriented, while covering Southeast Asia, with annual sales of RMB 30-40 million.

德国沃尔夫韦勒酒庄合作社 / Winzergenossenschaft Wolfenweiler eG

7.2C3-05

Address: 德国 Germany Schallstadt-Kirchstr. 2
Tel: 0757-85521072
Email: edetheo@163.com
Web: www.wg-wolfenweiler.de

沃尔夫韦勒酒庄合作社位于德国巴登符腾堡州沙尔城，小镇北邻地区首府弗莱堡，东靠黑森林，西临莱茵河，气候温暖干燥，是德国最古老的葡萄酒产区之一，有着超过1200年的酿造历史。酒庄主要出产德国西南部巴登地区的典型葡萄酒，其不仅保持着德国企业一向的高标准制作要求，还在2014年获得了德国权威的IFS Food Version 6质量认证。沃尔夫在德语里是狼的意思，因此酒庄也以一头狼作为自己产品的商标。
Over generations our winemakers have developed a wine culture that has made our products known far beyond the region. From quality wines to premium wine, our assortment offers a wide range for every occasion.
Our vineyards lay in the south near Freiburg, on the outlier of the Black Forest. With over 1200 year's history, we are one of the most historical wine-growing communities in Markgraflerland.

新西兰伟狮酒业饮料集团 / Lion-Beer, Spirits and Wine (NZ) Limited

7.2C3-15

Address: 新西兰 奥克兰市-弗里得曼湾区-内皮尔街27号 New Zealand Auckland 1011-Freemans Bay -27 Napier Street
Tel: 17317395369
Email: 3032529306@qq.com 3032528306@qq.com
Web: www.lionco.com www.lion.com

伟狮新西兰酒业饮料公司，是新西兰最大的酒水饮料集团，致力于葡萄酒、啤酒、果酒、饮料的市场推广和销售，控股新西兰多家葡萄酒庄、啤酒厂、果酒厂，饮料厂以及蜂蜜农庄。
Lion is New Zealand's largest alcohol beverage company. Our focus is on the production, marketing, sales and distribution of beer, wine, spirits, cider and ready-to-drink products, as well as honey products.Lion makes a significant contribution to New Zealand's economy generating about $818M.

Wexport Ltd.

7.2C3-18

Address: 保加利亚 Bulgaria Blagoevgrad- 4 Byalo more Str., floor 4,ap. 4.2
Tel: +359887111243
Email: vtodorov@bccid.com
Web: www.bccid.com

Wholesale and export of food, beverages, wines, cosmetics and oil products in the Republic of Bulgaria and abroad.

TiM S.A.

7.2C3-22(03)

Address: 波兰 Poland 5470086898-Bielsko-Bia a-ul. Tadeusza Regera 111
Tel: +48338182896
Email: philip.petras@timglobal.eu
Web: www.timglobal.eu

TiM S.A. has 30 years history and already have been exporting to China for 7 years. TiM S.A. exports wine, beers, ciders, malt drinks, energy drinks, dairy products. We can make OEM-private label brands.

Arteta Sp. z o. o

7.2C3-22(06)

Address: 波兰 Poland mazowieckie-Warszawa-Al.ks.J. Poniatowskiego 1
Tel: +48 669 966 057
Email: agnieszka.mirowska@arteta.pl
Web: arteta.eu

At Arteta we strongly believe that contemporary busy people deserve a convenient life full of flavour. Everyday we are seeking for innovations that follow food trends around the world. We are owner of couple of brands especially from healthy food sector like - DayUp. Clean label is our mark.

Prosper Trade & Travel Sp. z o.o.

7.2C3-22(09)

Address: 波兰 Poland Warsaw 00-351-Zajecza p. 3
Tel: +48 691 240 640
Email: anthony.chiu@1000lakes.pl
Web: www.1000lakes.pl

Producer of traditional foodstuffs of the north-eastern regions of Poland. Company focuses on natural, organic and functional pre-packed food. The range of products under the brand "1000 Lakes" include: raw honey, birch sap, alcoholic drink substitutes and smoothies.

Vanuatu Beverage Ltd

7.2C3-21

Address: 瓦努阿图 Vanuatu Efate-Port Vila-Prima Area
Tel: +67822964
Email: tdurand@vanbev.vu
Web: www.vanuatuwater.com.vu

First and only bottler of natural spring water in Vanuatu: VANUATU WATER

2N-Everpol

7.2C3-22(04)

Address: 波兰 Poland Warsaw-Warsaw-Pu awska 403
Tel: +48606652545
Email: olga.krawczyk@2n-everpol.pl
Web: www.everpol-export.pl

Company introduction 2N-Everpol is a company with 20 years of experience which combined with a well-consolidated and established position on the market. Our firm has been successfully trading with Chinese entrepreneurs for 10 years what is an indicator of reliability and promptness. In 2015, 2N-Everpol extended its' operation into export of food comm

CONTIMAX

7.2C3-22(07)

Address: 波兰 Poland MALOPOLSKA-BOCHNIA-PARTYZANTOW 12C
Tel: + 48 14 6118725
Email: iwona.wisniewska@contimax.pl
Web: www.contimax.pl

Contimax was established almost 30 years ago. 3 own production plants are supplying not only Polish market but also international group of Clients. The offer - over 100 products: fish cans, frozen salmon fillets, portions, smoked fish, fish marinades, convenience meals managed as a portfolio of brands. Wide assortment of products let us to become a strategic supplier for many Customers.

VAN PUR S.A.

7.2C3-22(10)

Address: 波兰 Poland 02-677 Warszawa, ul. Cybernetyki 7 Oddzia w Rakszawie: 37-111 Rakszawa 334
Tel: 021-51178903
Email: p.zhang@vanpur.com
Web:

波兰万波啤酒集团是中东欧最大的独资啤酒生产商，在波兰拥有5座现代化酿酒厂，产品遍布超过100个国际市场。集团拥有超过8个国际知名啤酒品牌，150个私有商标品牌，共有超过600种啤酒品类。集团是波兰出口品牌的领导者，以卓越的品质和优惠的价格为客户提供最优良的服务，旗下不仅有万波系列，沃姆扎系列，波达克系列以及艾德大师系列等多个国际知名品牌，同时还是家乐福和沃尔玛等大型商超的长期合作伙伴，为其生产自有品牌啤酒。

P.P.H. Tabit Sp. z o.o.

7.2C3-22(02)

Address: 波兰 Poland Mazovia-Otwock-Ko taja 44
Tel: +48696050617
Email: p.wojnicz@bartolini.com.pl
Web: www.bartolini.com.pl

Pasta producer

Activ

7.2C3-22(05)

Address: 波兰 Poland mazowieckie-Warszawa-Grzybowska 87
Tel: +48607777587
Email: m.wozniak@royal-apple.com
Web: www.royal-apple.com

ACTIV has been operating since 1996.It's a family-owned company and it's activity concentrates around fruit farming.In 2011 the company's activity was extended to production of natural cloudy ROYAL APPLE juice.ROYAL APPLE juice is pressed from fresh, ripe, good quality apples with an addition of other fruit or vegetables.Juices do not contain any additives. No sugar, water and preservatives.

EWA-BIS Sp. z o.o.

7.2C3-22(08)

Address: 波兰 Poland Warsaw-Serwituty 25
Tel: 00223439800
Email: joanna.barabasz@ewabis.com.pl
Web: ewabis.com.pl

Ewa-Bis is international trade company, currently exports to about 50 countries around the world, including almost all of Europe.The most important activity is the export of fresh and frozen vegetables and fruits. The company's offer also includes NFC juices, concentrates and FMCG products.

VICI Polska sp. z o.o.

7.2C3-22(11)

Address: 波兰 Poland Mazowieckie-Warsaw-Zaj cza 15, 00-351
Tel: +48602118968
Email: d.donko@vicigroup.pl
Web: vicigroup.pl/en/home

VICI exports high quality food products. The main areas of the company's activity are the development of our own brands and acquisition of the best purchase sources, export of domestic and international brands as well as the development of discount products. Comprehensive knowledge of market needs, packaging requirements and product positioning made VICI the export leader in the dairy category.

JMD GLOBAL / JORA

7.2C3-22(12)

Address: 波兰 Poland WARKA-GRÓJECKA 14
Tel: +48601278135
Email: joanna.debecka@jmdglobal.pl
Web:

Polish Apples, Polish diary, Polish muesli, Polish cookies

Przetworstwo Rybne Losos sp. z o.o. / Fish Processing Losos

7.2C3-22(13)

Address: 波兰 Poland Slupsk 2-Wlynkowko 49b
Tel: +48598472700
Email: kjaworski@lososustka.com.pl
Web: www.lososustka.com.pl

Losos is one of the most technologically advanced producer of canned fish products in Europe. Our plant has IFS, BRC, HACCP and MSC certificates.
Our weekly producion output exceeds 1 millios cans and is sold all accross Europe and America.

LEI food & drinks

7.2C3-22(14)

Address: 波兰 Poland Krakow-ul. Sw.Jana 2
Tel: +48505253767
Email: exportmanager@leifood.com
Web: www.leifood.com

LEI food & drinks is a producer of 100% Pure Apple Juice NFC (Not From Concentrate) -natural, unclarified juice pressed from healthy and fresh fruits. Product without any preservatives or added sugar or added water.

PERINO

7.2C3-22(16)

Address: 波兰 Mazowieckie -Warszawa-Terespolska 65 Poland Mazowieckie -Nowy Konik-Terespolska 65
Tel: 0048227602900
Email: e.sokolowska@perino.pl
Web: www.perino.pl

PERINO is a company specialising in the production of "pasta fresca" – fresh, deep-frozen pasta in the Italian tradition and of a unique taste. Many years of experience, passion and commitment enabled us to create superior quality products that cater even the most demanding tastes.

Pryncy Teka Sp. z o.o

7.2C3-22(17)

Address: 波兰 Poland MAZOWIECKIE-KOBYLKA-NADARZYNSKA 67
Tel: +48227604855
Email: marcin.saks@pryncyteka.pl
Web: www.pryncyteka.pl

Confectionery factory. We produce: wafers. wafers in real chocolate, fragile cookies, sponge cakes, pralines, dragees, caramels.

Dr Gerard

7.2C3-22(19)

Address: 波兰 Poland Mazowieckie-Warsaw-Salsy 2
Tel: +86 138 173 55 914
Email: m.hennig@vicigroup.pl
Web: drgerard.eu

Dr Gerard is one of the biggest and most important producers of sweets, on the market of both Poland, and the Central and Eastern Europe.Company offers over 200 types of cookies and variety of salty snack.Operated over 20 years,passionate about creating delicious cookies.

信基国际企业有限公司 / Truth & Faith International Limited

7.2C4-01(01)

Address: 香港地区 香港九龙观塘鸿图道83号东瀛遊广场28楼E室 Hong Kong Flat E, 28/F, EGL Tower, 83 Hung To Road, Kwun Tong, KLN
Tel: 85235831066
Email: expo@ausupreme.com
Web: www.ausupreme.com

澳至尊国际控股有限公司于2016年9月在香港交易所主板上市，是香港第一家及目前唯一一家以销售西式营养补充品为主要业务的主板上市公司，并凭着「真诚营商•坚守信念」的企业文化，建立出专业及杰出的服务团队。本集团的业务稳健发展，经营之品牌及产品深得市场支持，同时重视企业内部的关爱文化，更实际回馈社会和承担社会责任。
AUSupreme International Holdings limited has listed on the Main Board of HKEX since September 2016 (stock code 2031.HK). It is the 1st and at present the only listed company by providing western dietary supplements as its main business in Hong Kong. The Group's business has developed steadily, its brands and products have won extensive market support.

科確實業有限公司 / FORCODE INDUSTRIES LIMITED

7.2C4-01(03)

Address: 香港地区 九龍官塘大業街15-17號永富工業大廈1字樓B2室 Hong Kong BLK.B2, 1/F WINFUL IND. BLDG., 15-17 TAI YIP ST., KWUN TONG, KOWLOON,
Tel: (852) 2410 8988
Email: info@jinjinforcode.com.hk
Web: www.jinjinfood.net

本公司成立於1995年。主要的業務範圍包括進出口、批發及銷售各類食品於香港地区、澳門地区及大陸市場。公司於2012年開始獲得英國 "HIT ENTERTAINMENT" 公司授權在中國市場開發及銷售各款 "托馬斯"小火車的糖果，目前已經開發了10多類產品供應給中國的小朋友享用。
The company was established in 1995. The main business scope includes import, export, wholesale and sales of various foods in Hong Kong Region, Macau Region and the mainland market. In 2012, the company began to obtain the authorization of the British "HIT ENTERTAINMENT" company to develop and sell various models in the Chinese market. The candy of the "Thomas" train has already developed more than 10 types.

王子食品集团有限公司 / HK PRINCE FOODS HOLDINGS

7.2C4-01(04)

Address: 香港地区 香港柴湾新业街9号新业大厦11楼 Hong Kong 11/F., SUMMIT IND. BLDG., 9 SUN YIP STREET, CHAI WAN
Tel: (852)9821 6088
(852)98216088
Email: sec@princefoods.hk
Web: www.princefoods.hk

王子食品集团扎根香港逾30年，坚持香港制造，具规模进口东南亚食品供货商和制造商。香港自置生产厂房。設立自家品牌「万胜厨」,「亚洲厨」及「万时利」及供应各大酒店和餐饮业调味酱料、急冻小食和罐头食品，並代理多个东南亚知名食品品牌，产品超过1000种。市场占有率达七成。亦拓展零售、网购、内地及海外业务。荣获多项国际认证及奬项(CEPA、ISO22000 、HACCP、Halal、香港名牌等)。
Rooted in Hong Kong over 30 years, HK Prince Foods Holdings is devoted to offer "Made in HK" products, be importer and manufacturer specializing in Southeast Asian foods, supply to hotels and F&B (Over 70% market-share). She has own production-line, own brands (M.X.Cuisine, Asianchef, Maxley), agent Southern Asia well-knowns brands and obtained CEPA, ISO22000, HACCP, Halal, HK Top Brand etc.

易高文（香港）有限公司 / Ikoman (Hong Kong) Limited

7.2C4-01(05)

Address: 香港地区九龙，观塘，成业街19-21号，成业工业大厦5楼22室 Hong Kong Kowloon-Kwun Tong-Room 522, Shing Yip Industrial Building, 19-21 Shing Yip Street
Tel: +852-21531236
Email: richard.su@ikoman.com
Web: www.ikoman.com

易高文（香港）有限公司成立於2011年12月，我們創造並擁有“香醇怡保”品牌。香醇怡保是一個速溶飲料/食品的品牌。包裝設計及產品測試全部在香港地区進行。目前品牌有4個產品系列：白咖啡、馬來拉茶、健與美和吃得好系列。我們的工廠是在馬來西亞，市場營銷業務策略/開發/管理位於香港地区。目前，我們的產品在香港地区各大超市如：惠康，一田百貨，UNY，等有售。我們希望以這個品牌開拓中國市場。
Ikoman (Hong Kong) Limited was established in year 2011.We are the creator and owner of the brand Aroma Ipoh that has 4 series of products, namely: White Coffee,Teh Tarik (milk tea), Wellness&Beauty and Eat Well.Currently, we have around 20 different products and we aim to introduce new product every year. These are instant foods. All our products are made in Malaysia under strict ISO2200

金田食品有限公司 / Kam Tin Food Ltd.

7.2C4-01(06)

Address: 香港地区 香港新界屯門藍地福亨村路26號 Hong Kong No. 26 Fuk Hang Tsuen Road, Lam Tei, Tuen Mun
Tel: 852-24050468
Email: pui@kamtin.com
Web: www.kamtin.com

金田食品有限公司自創業2000年以來，以「金皇蜂」作為旗下產品的註冊商標。各款產品分別選取了東南亞風味的特式再配上優質蜂蜜嚴謹研製而成，故得到出產地之衛生局所發出的衛生證明書及通過香港食品檢定測試之合格証明書。產品全以東南亞國家入口；包括：柑桔蜜、青檸蜜、菠蘿青檸蜜、菊花薑蜜、蜂蜜菊花露、蜂蜜柚子茶、綠茶菊花蜜、洛神花蜜、桑椹蜜、珍珠草茶、金裝羅漢果茶、黑糖薑茶、有機森林蜜及東革阿里等等。
Ever since its establishment in 1999, Kam Tin Food Limited has built up a bright image for its products under the registered trademark of "Golden Bee".Characterised by different Southeast Asian tastes, the various products are made with high quality honey on the basis of very careful research. Therefore we have obtained for these products hygiene certificates。

僑豐行有限公司 / KIU FUNG HONG LIMITED

7.2C4-01(07)

Address: 香港地区 葵涌葵喜街26-32號金發工業大廈二期20樓 Hong Kong 20/F., KINGSFORD IND. BLDG., PHASE 2, 26-32 KWAI HEI ST., KWAI CHUNG
Tel: 26142686
Email: edotrading@edo.com.hk
Web:

僑豐行有限公司於1965年成立，經營日本零食貿易業務。公司擁有兩個自家品牌，分別是EDO Pack及巨浪大切。藉著已建立的銷售網絡，把產品逐步推出市場。早期以出產日式零食為主，其後引入韓國生產的餅乾以及從世界各地搜羅合適的產品，豐富產品種類。現時，品牌旗下的產品包括糖果、朱古力、餅乾、酥餅類、蛋糕、飲品、即食麵和曲奇餅，多元化發展產品種類和款式。
Established in 1965, Kiu Fung Hong is one of the leading retail and wholesale company in Hong Kong, specialising in snacks and confectioneries. We developed our own first brand Edo 'edo pack' Biscuits, then later created 'Big Waves Cut' snacks. In the meantime, we also delivered the concept of "Balance diet, health value up" to consumers.

李锦记（香港）食品有限公司 / Lee Kum Kee (Hong Kong) Foods Ltd.

7.2C4-01(08)

Address: 香港地区 香港大埔工业邨大发街2至4号 Hong Kong 2-4 Dai Fat Street, Tai Po Industrial Estate, Tai Po, New Territories, Hong Kong
Tel: 852-26604847
Email: marsha.yeung@lkk.com
Web: www.lkk.com

1888年，李锦记创办人李锦裳先生於广东省珠海南水镇发明蚝油，并创立李锦记。集团现已成为一个家传户晓的酱料王国，是「品质与信心」的标志。肩负着「发扬中华优秀饮食文化」的使命，李锦记现时供应逾200种产品到全球超过100个国家和地区。
In 1888, Mr. Lee Kum Sheung, the founder of Lee Kum Kee invented oyster sauce in Nanshui, Guangdong Province and established Lee Kum Kee. It has become a globally renowned sauce and condiment enterprise. With the mission of "Promoting Chinese Culinary Culture Worldwide", Lee Kum Kee provides over 200 choices of sauces and condiments to over 100 countries and regions worldwide.

吉田國際貿易有限公司 / Yoshida International Trading Limited

7.2C4-01(09)

Address: 香港地区香港仔田灣徑9號新英工業中心8樓F室 Hong Kong Aberdeen-9 Tin Wan Close-Unit F, 8/F, Sun Ying Industrial Centre
Tel: 25499158
Email: info@fuyangco.com
Web:

本公司於1993年成立，當時主要業務為日本食品批發及零售為主，隨後批發業務日益擴大，便結束零售業務專注香港地区批發市場，於2003年開始創立自家品牌產品，以東南亞食品，調味料及火鍋類產品為主，提供于香港地区多家凍肉零售，酒家，餐廳，火鍋店等等。近年公司有意投放更多資源於國內市場，希望能將具香港本土風味的自家品牌產品進口到國內。
Established in 1993, Yoshida focused on wholesale and retail business of Japanese food. Starting from 2003, the company has launched its own branded products, and provide a wide range of Southeast Asian food and hotpot product lines towards HK Region market. The company now aims at expanding its business in China, offering exclusive branded products and experience with one-of-a-kind local flavor from HK Region.

八珍食品有限公司 / Pat Chun Foods Limited

7.2C4-01(10)

Address: 香港地区 新界-将军澳工业邨-骏宏街18号八珍大楼 Hong Kong New Territories-Tseung Kwan O Industrial Estate-18 Chun Wang Street
Tel: +852 2392 6862
Email: emily.hiew@patchun.com
Web: www.patchun.com

八珍於1932年在香港成立乃香港馳名的中式醬園，是甜醋和傳統中式調味料的主要製造商。八珍產品被廣泛應用於不同層面,由家庭主婦烹調美味菜式，甚至被新派的米芝蓮主廚應用在佳餚菜式中。八珍還出口醋醬料到新加坡，美加，歐洲，澳大利亞的華人市場。近年更將香港地区製造八珍甜醋和醬料內銷到中國大陸市場。
In 1932 Mr. Ng Sum founded Pat Chun, setting up his grocery store in Mongkok, Hong Kong. Pat Chun recently celebrated its 80th anniversary and remains the premier manufacturer of brewed oriental sauces and condiments, synonymous with quality.

漢生堂藥業有限公司 / Han Sheng Tang Herbal Technologies Co., Ltd.

7.2C4-01(12)

Address: 香港地区 香港干諾道西141號保栢中心17字樓 Hong Kong 17/F, Bupa Centre, 141 Connaught Road West
Tel: (852) 2368 2288
Email: info@hanshengtang.com
Web: www.hanshengtang.com

漢生堂藥業有限公司於2000年在香港成立，是香港少數擁有國醫大師主導的紮實科研班底、自主的知識產權、享譽國際的香港漢生堂與全國中藥行業著名的老字號雙名牌、香港製藥工廠和內地種植基地的現代藥企。漢生堂堅持科學領路，產品推出後，仍不斷投放資源進行臨床試驗。漢生堂的產品均有自主知識產權，在香港生產，品質有保證，療效顯著，獨家產品具獨特優勢，造福人群，有口皆碑。
Established in Hong Kong in 2000, Han Sheng Tang is one of the few modern pharmaceutical companies with well-established scientific research team, independent intellectual property rights, branding with nationally renowned Chinese medicine corporate in mainland China, pharmaceutical factory located in Hong Kong region as well as planting base in mainland China.

金龙食品贸易有限公司 / Golden Long Food Trading Limited

7.2C4-01(13)

Address: 香港地区 香港九龙观塘海滨道133号万兆丰中心23楼A1室 Hong Kong Office A1, 23/F., MG Tower, No.133 Hoi Bun Road, Kwun Tong, Kowloon
Tel: 020-66855151-1829
Email: marketing805@sakale.cn
Web: www.goldenlong.com.cn www.sakale.cn

香港金龙食品贸易有限公司成立于1988年，是香港主要食品供应商之一。 2003，金龙食品在中国成立三嘉乐贸易（广州）有限公司，全力以赴发展国内市场。公司自成立以来，以进口外国食品为主业务，主要代理东南亚、欧美、台湾地区等地的知名食品品牌，产品覆盖休闲食品、饼干、罐头、饮料、餐料等各个品类。
Hong Kong Golden Long Food Trading Co., Ltd. was established in 1988 and is one of the major food supplier in Hong Kong region. Golden Long Trading Co., Ltd. is a Hong Kong base distributor for many international brands such as Thailand, Indonesia, Singapore, USA, Belgium, Malaysia, Philippines, Vietnam, etc.

安记海味有限公司 / ON KEE DRY SEAFOOD CO., LTD

7.2C4-01(14)

Address: 香港地区 香港上环急庇利街8号金丰大厦1楼及地下F-G铺 Hong Kong G/F, Flat F-G, Kam Fung Building, 8 Cleverly Street, Sheung Wan
Tel: +852-2588-4632
Email: jane@onkee.com
Web: www.onkee.com

安记海味由70年代初经营，从香港上环一间街坊小店成长至香港人熟悉的海味名牌。多年不变的秉承着经营宗旨及承诺 - 货真价实.薄利多销.买得称心。食得安心，安记一直重视：产品质素 - 厂房及产品均有定期查核及测试，确保符合各项卫生标准及条例要求；产品拓展 - 不断从世界各地搜罗优质海味干货，兼顾及切合客户所需；服务质素 - 精益求精，为客人提供高服务质素。
Founded in the early 1970's, On Kee started from a tiny neighborhood dry seafood store located in Sheung Wan. Today, as a renowned leader of dry seafood industry in HK, we always adheres strictly to the philosophy: Genuine Goods At Fair Price. Customer Satisfaction. Quality Assurance.

金京發展有限公司 / Gold China Development Ltd

7.2C4-01(15)

Address: 香港地区 葵涌-葵豐路33-39號華豐工業中心第二期7樓N室 Hong Kong Kwai Chung-Unit N, 7/F, Stage 2, Wah Fung Ind. Centre, 33-39 Kwai Fung Rd.,
Tel: 852-24217849
Email: tian_lo@truefun.com tian_lo@truefun.hk
Web: www.truefun.hk

我們致力搜羅歐洲及東南亞的美酒佳餚，追求優質可靠的食材。不論是精品肉類、有機果汁、健康小食、高級食材及VDP紅/白酒及也一應俱全；讓您在大飽口腹之餘，，亦可食得安心，大人小孩也可享受到美食的樂趣。
We devote to hunt for supreme food from Europe and South-east Asia, of high and reliable quality. They include healthy food, organic juice, delicate biscuits, deluxe food and VDP red/white wine, to satisfy your taste buds without worrying about food safety.

香港真滋味食品廠有限公司 / H.K.C.C.M.FOOD FACTORY LTD

7.2C4-01(16)

Address: 香港地区 香港-中國-香港荃灣德士古道168號德豐工業中心1座4樓05室 Hong Kong HK-CHINA-RM405 BLK1 TAK FUNG IND CTR 168 TEXACO RD TSUEN WAN NT
Tel: 2392 8288
Email: chanchimei@163.com
Web: www.chanchimei.com.hk

真滋味是香港主要专业的XO酱生产商，始创于1973年，乃香港本地少数历史悠久，而仍然维持香港制造的企业之一，拥有自己的制造厂，并且拥有自己的品牌。由最初传统的手工制作，逐渐发展到现代化管理和生产，坚持全心全意制造食品，研发出一系列高创意性的高级食品，受到东南亚、加拿大、英国、澳洲等地华人欢迎。
Really taste is a major professional XO sauce manufacturer in Hong Kong,was founded in 1973,is a Hong Kong local minority has a long history,and still maintain Hong Kong one of manufacturing enterprises,has its own factory,and have their own brand,By original traditional hand-made,gradually developed into modern management and production,adhere to the heart and soul to make food,developed a serie.

CEC国际投资有限公司 / CEC International Investment Limited

7.2C4-01(17)

Address: 香港地区 九龍旺角彌敦道555號, 九龍行19字樓 1905室 Hong Kong Rm 1905,19/F, Kowloon Building,555 Nathan Road, Mong Kok, Kowloon, Hong Kong
Tel: 0756-3266808
Email: wanfang@cec-zh.com
Web:

CEC INTERNATIONAL INVESTMENT LIMITED was incorporated on 29-12-1992.

Imperial Bird's Nest International Co., Ltd

7.2C4-01(18)

Address: 香港地区 HongKong China-Unit 01-08, 21/F Tsuen Wan Industrial Centre, 220-248 Texaco Road, Tsuen Wan, NT
Tel: (8620)88901220
Email: sue.xu@ibnest.com
Web: www.ibnest.com

As an international health food company based on traditional Chinese healthcare theory, IBNI's business scope covers production, retail, distribution and wholesale of several hundred kinds of traditional nutritious and modern health food products.

远大贸易有限公司 / Yuen Tai Trading Company Limited

7.2C4-01(19)

Address: 香港地区 香港干诺道西21-24号海景商业大厦四楼 Hong Kong 4/F Seaview Commercial Building 21-24 Connaught Road West
Tel: 852-25490016
Email: yt@yuen-tai.com
Web: www.yuen-tai.com

远大贸易有限公司 Yuen Tai Trading Co., Ltd. 自成立四十多年来，一直为中國及东南亚世界各地区提供罐头粮油糖果饼干等类食品，深为普罗大众所熟悉，销售产品遍布各大超级市场、酒家、以及辨馆士多商户。
Yuen Tai Trading Company Limited was established since 1964, for the past 40 years, we supplied a wide variety of canned food, groceries, candies, biscuits and etc. to outlets of Greater China and many foreign countries in the world. Our sales product were well known and recognized by consumers and the chain of distribution involved larges supermarkets.

美味棧國際有限公司 / Yummy House International Ltd

7.2C4-01(20)

Address: 香港地区 香港干諾道西118號10樓1005室 Hong Kong Unit 1005, 10/F, 118 Connaught Road West, Hong Kong
Tel: 852 28030833
Email: eddie@yum.com.hk
Web: www.yum.com.hk

美味棧 成立于2001年，是一间专门监制优质酱料及健康美食的国际性机构，我们秉承着「更新口味，创新口感，尝新口福」的宗旨，研制出各种美味的酱汁及其他美食系列，每种产品均符合香港食环署订立之卫生标准，是追求美味及健康人士的信心之选。并且早于2000年美味棧的业务已遍布海外43个国家，产品营销世界各地，而为方便顾客，自家亦设有8间专门店，务求达到多元化，将产品推介至世界每一角落，并将美味棧 品牌发扬光大。
Aiming at "Modern Taste, Innovative Texture, New Generation of Gastronomy". Yummy House International Limited, founded in 2001, had developed over 200 kinds of products. In the early days it focused on overseas markets of 16 countries in Europe, North America and Asia-Pacific Region.

彩虹企業（香港）有限公司 / Rainbow Enterprise (HK) Ltd

7.2C4-01(21)

Address: 香港地区 香港九龍長沙灣 Hong Kong Cheung sha wan, Kowloon, HongKong
Tel: +852-27768870
Email: wendy@rainbowent.hk
Web: www.kaikee.hk

彩虹企業旗下品牌佳記，主要以進口環球美食以及香港地区本土生產美味食品，產品來源多以東南亞、美國等地，近年開始自主研發製造，生產符合大眾化的健康產品為主！
Rainbow Enterprise (hk)LTD'S KAIKEE brand, mainly to import global cuisine and Hong Kong Region local production of delicious food, products from Malaysia, Indonesia, the United States and other places,2018 years began independent research and development and manufacturing, production of health products in line with the popularity of the main!

忠信世貿有限公司 / CPL Industrial Ltd.

7.2C4-01(22)

Address: 香港地区 旺角-上海街682號一樓 Hong Kong Mongkok-1/F, 682 Shanghai Street
Tel: +852 2854 2223
Email: m15507509663@163.com
Web: www.top1imports.com

我們旨在為您提供世界上最好的產品。從這裡，您會發現還沒有進入市場之前很快在葡萄園中便銷售一空的葡萄酒,其他地方都找不到的美食和糖果，以及精心準備可以加速您銷售的禮品等等。請隨時跟我們聯繫！
Top 1 Imports is an import division of CPL Industrial Ltd. and aimed to provide you with the finest products from the world to our homeland. From here, you will find wines that are quickly sold out in the vineyards before they are introduced to the market, foodies that are not found anywhere else, and carefully prepared gifts that accelerate your sales, etc. Check with us for more !

原燕房有限公司 / Perfect Bird Nest Co Ltd

7.2C4-01(23)

Address: 香港地区 HongKong China-柴灣-祥利街9號祥利工業大廈14字樓 Hong Kong Hong Kong-Chai Wan-14/F, Cheung Lee Industrial Building, No 9 Cheung Lee Street,
Tel: (852)21809260
Email: kevinhsu@perfectbirdnest.com
Web: www.perfectbirdnest.com

原燕房自十九世紀初, 在印尼開始擁有第一間燕屋, 到第一間燕窩加工廠, 至今已經超過一個世紀。在香港、澳門地区, 原燕房是眾多知名品牌，包括在香港機場免稅店、澳门機場免稅店、中信泰富子公司-大昌食品專門店/ 市場的核心供應商。原燕房有中国正式燕窩入口許可證, 可提供各種燕窩/燕窩原料(毛燕)/即食燕窩加工, 中國入口或零售的咨詢和管理。
PBN had started first swiftlet house and processing factory in Indonesia, been more than a century. In HK and Macau, PBN is the core suppliers of DFS, Macau Airport Duty Free Shop, CITIC (DCH Food Mart). PBN has China import permit, can provide processed bird's nest, raw bird's nest materials, instant bird's nest drinks, and a rang of product consulting and management of bird's nest for China.

美国仁心仁术健康国际(香港)有限公司 / USA L&H health international limited

7.2C4-01(24)

Address: 香港地区 新界-葵涌-香港新界葵涌大連排道35號金基大廈22樓A6 Hong Kong N.T-kwai chung-A6, 22F, gold king industrial bldg, 35 tai lin pai rd, kwai chung, NT, HK
Tel: 852-28112000 28112000
Email: lockhealth@usalh.com
Web: www.usalh.com

我司代理銷售各類保健食品，已在香港運營6年，目前擁有六間連鎖店舖,位於銅鑼灣,深水埗,元朗,上水、太和以及天水圍。我司已連續五年參加由香港中華廠商會主辦的一年一度香港工展會，亦參加過數次由香港貿發局主辦的內地各類宣傳展銷會。
Our company is undertaking health food production with five years history, which is registered in USA and based in Hong Kong SAR. We conduct authenticity tests on compositions and labels of products. We only cooperate with licensed raw materials suppliers in order to guarantee the quality of products, and utilize high-tech plant essence extraction technologies.

利楊飲飲食食有限公司 / LY Drinks & Bites Limited

7.2C4-01(25)

Address: 香港地区 北角-香港北角屈臣道4-6號海景大廈B座7樓5室 Hong Kong North Point-Rm 5, 7/F, Block B, Sea View Estate, No. 4-6 Watson Road,
Tel: 852-23031307
Email: camio@drinksandbiteshk.com
Web: www.drinksandbiteshk.com

於2015年成立，主要為顧客提供高品質的日本食品。利楊飲飲食食 得到日本合作夥伴的頂力支持，借助我們跟當地合作夥伴的緊密關係，通過我們的網絡將當地的優質食材從生產者手中快速安全地送到您們手上。
Our mission is to provide and supply the best possible quality of Japanese food and beverages to customers. We are able to keep close contact with our Japanese Suppliers, and thus, have formed an excellent working relationship. Because of such close connections we have with our suppliers, we are able to bring the freshest possible food and beverages to customers in the fastest and most secure way.

新华集团 / SUN WAH GROUP

7.2C4-01(26)

Address: 香港地区 屯門湖山路215-239號新华集团中心 Hong Kong SUN WAH CENTRE, 215-239 WU SHAN ROAD, TUEN MUN, HONG KONG
Tel: +852 28504799
Email: maggie-wines@sunwahgroup.com
Web: www.sunwahgroup.com

新華集團成立於1957年，初期主要以加工速凍海鮮再出口外銷到日本、歐美國地為主，並於東南亞各地設有加工廠直接送產區出口到香港地区、歐美及日本等地。隨著集團的發展，產品更加多元化，並從日本及歐美各地引入優質食品，其中重歐洲各地進口優質葡萄酒及罐頭食品，每年進口額達億元港幣，集團更是全港進口日本食品最大的進口商，展望未來集團會憑藉著超過50年的經驗，將優質安全的食品介紹給廣大的國內群眾。
Sun Wah Group was established since 1957 and has built one of the world's largest and most impressive seafood empire, a vertically integrated operation and value chain that from the sea to shelf to table. Sun Wah's comprehensive service is base on assurance, quality, reliability and value.

金百加发展有限公司 / Kampery Development Ltd.

7.2C4-01(27)

Address: 香港地区 香港新界葵涌葵丰街2-16号钟意恒胜中心四楼2-3室 Hong Kong Room 2-3, 4 / f, chung yee heng shing centre, 2-16 kwai fung street, kwai chung, New Territories, Hong Kong
Tel: 021-56625133
Email: 369048462@qq.com
Web: www.kampery.com.hk

金百加于一九九三年香港地区成立，为一国际性食品及饮料的企业，主要从事生产、批发、零售及出入口业务。集团旗下「乐满家」、「金百加餐饮」及「点点红」积极投资及拓展香港地区、内地及海外食品市场，主要从事咖啡、红 茶、葡萄酒、咖啡设备等，业务遍及全球，附属公司设于 世界各地，包括中国内地主要城市(上海、广州、深圳等)，加拿大 (多伦多及温哥华) 及欧洲 (法国)等。
Kampery was established in 1993 in Hong Kong; business covers manufacturing, wholesaling, retailing, importing and exporting. The Group includes Mocaroma, Kampery F&B Services, are specializing in coffee and tea products; Red Dot Dot and Chateau Le Cleret specialize in wine industry. Regional offices & subsidiary companies are established in China, Canada and France.

合興油脂有限公司 / Hop Hing Food Products Ltd

7.2C4-01(31)

Address: 香港地区 新界元朗唐人新村屏唐東街9號合興大廈2樓D室 Hong Kong Flat D, 2/F, Hop Hing Building, 9 Ping Tong Street East, Tong Yan San Tsuen, Yuen Long
Tel: 2943 7888
Email: hho@hophing-oil.com
Web: www.hoping-oil.com

合興集團旗下擁有多個品牌包括獅球嘜、超羣、吉野家，合興於1991年於元朗興建煉油廠，除了保證生產食油的新鮮之外，合興集團還自設實驗室，專注研究開發不同種類的健康食油包括花生油、粟米油、花籽油、橄欖油等，旗下旗艦品牌獅球嘜亦取得全港銷售及銷量第一的佳績。
Hop Hing owns a number of brands including Lion & Globe, Maria's and Yoshinoya. We focus on different types of healthy cooking oils eg peanut oil, corn oil, flower seed oil, olive oil, etc. Its flagship brand, Lion & Globe, is the no.1 oil brand in HK

唐潮（香港）有限公司 / Mandarin Favorite（HK) Limited

7.2C4-01(32)

Address: 香港地区 香港尖沙咀金巴利道45号金巴利广场801室 Hong Kong Room 801, Kimberley Plaza, 45 Kimberley Road, Tsim Sha Tsui, Kowloon, HK.,
Tel: （852）-9833 0189
Email: mandarinfav@163.com
Web: www.mandarinfav.com

唐潮（香港）有限公司成立于2002年，公司在研制、生产已有十分丰富的经验，并为香港多间大品牌代工生产，852维港荟，是公司自有的品牌，852维港荟，荣获大中华百分百香港名牌十大名牌大奖2014-2019并荣获广东省人力资源厅“粤港青年创新创业及就业发展计划”首批支持企业。
Mandarin Favorite（HK) Limited, founded in 2002, the company has very rich experience in development, production, and for a number of big brand OEM production, Hong Kong 852 harbour group, is the company's own brand, 852 harbour group, won the greater China hundred famous Hong Kong top ten famous brand award, 2014-2019, and won the guangdong human resources "guangdong youth innovative undertaking

榮華食品製造業有限公司 / Wing Wah Food Manufactory Limited

7.2C4-01(33)

Address: 香港地区 香港元朗泰利街18號榮華食品中心5字樓 Hong Kong 5/F, Flourish Food Manufactory Centre, 18 Tai Lee Street, Yuen Long, Hong Kong
Tel: (852) 2477 9831
Email: ophelia.tam@wingwah.com
Web: wingwah.com;mooncake.com icymooncake.com chineseweddingcake.com

香港榮華餅家，由1950年元朗一隅的茶樓餅家，發展至今分店已遍佈香港地区及中國內地，多年來一直堅持選料上乘、真誠服務的優良傳統，更保留了香港地道飲食文化特色，包括月餅、臘腸、婚嫁禮餅、熱辣辣老婆餅等，成為旅客必到的商店，選購富有香港特色的手信禮品。
Hong Kong Wing Wah Cake Shop began in 1950 as a tea house in Yuen Long. Today, it has become a restaurant group that has its own fully-equipped manufacturing plant and over 50 retail stores across Hong Kong, Kowloon and the New Territories.Hong Kong Wing Wah has preserved much of the traditional Hong Kong food culture, including the Yuen Long Wing Wah Mooncake, Wife Cake and Tai Wing Wai Villag

南順產品供應(香港)有限公司 / Lam Soon Products Supply (HK) Co. Ltd.

7.2C4-01(28)

Address: 香港地区 香港新界大埔工業村大富街21號南順大廈 Hong Kong Lam Soon Building, 21 Dai Fu Street, Tai Po Industrial Estate, Tai Po, N.T., Hong Kong
Tel: (852) 2680 3365
Email: jenny.lee@lamsoon.com
Web: www.lamsoon.com

南順在香港的業務始於1961年, 時至今日, 已成為業內翹楚, 帶領著香港的食油及家庭用品市場。為了確保產品的優良質素, 南順一注意人材培訓, 積極投資新科技。集團在香港地区及中國內地的廠房, 均採用最先進的機械設施, 並聘請專家擔任技術顧問, 保證生產設施達到國際水平。
In 1961, Lam Soon began operations in Hong Kong and is now a major player in edible oils and home care products in the territory. In 1997, the Hong Leong Group became the major shareholder of the Lam Soon Group. Today, the core businesses of Lam Soon Group are edible oils, flour and home care products.

常康健工房有限公司 / ALL TIME HEALTHY CO. LTD.

7.2C4-01(29)

Address: 香港地区 香港官塘鴻圖道1号23樓2307-08室 Hong Kong Rm#2307-08, 23/F, NO.1 HUNG TO ROAD, KWUN TONG, HONG KONG.
Tel: 852-27933602
Email: info@alltimehealthy.com
Web: www.ath-hk.com;www.ath-canada.ca

我司創立於2014年, 主要經營健康和保健品, 我司在加拿大擁有優良研發保健品團隊, 主打精研優質保健品配方然後交給加拿大優質的藥廠生產。我司希望參加中國國際進口博覽會, 將我司優質的健康及保健品推介給我們中國人民, 令他們認識及曉得選擇優質的健康和保健產品, 帶給中國人民健康, 國家便會繼續富強, 國泰民安, 這是我司發展方向及使命。
All Time Healthy Co. Ltd. established in 2014 specializes in Healthy Products & Supplements. We have a skillful research & development team in Canada and manufacture our OEM products in a qualified Canada factory .By participating in CIIE, we aim to bring in our products for China people providing a good choice for superior quality Healthy Products.Our top mission is - Good Health, Good China.

香港四洲集团 / Four Seas Group

7.2C4-01(30)

Address: 香港地区 香港九龙湾宏泰道23号Manhattan Place 21楼 Hong Kong 21F, Manhattan Place, 23 Hong Tai Road, Kowloon Bay, Hong Kong
Tel: 2219-5000
Email: lausunpo@fourseassh.com
Web: www.fourseasgroup.com.hk

四洲集團由戴德豐大紫荊勳賢於1971年創立，業務發展多元化,主要從事食品原料供應、製造、代理銷售、零售、食肆經營、農業投資和投資控股業務，其貿易藍圖覆蓋亞洲、歐美和世界各地，為香港地区最大的食品企業之一。
Founded in 1971 by Dr. Stephen Tai, GBM, GBS, SBS, JP, Four Seas Group is one of the largest food enterprises in Hong Kong committed to providing high quality, great taste foods to consumers globally. The core businesses of the Group are food materials supply, manufacturing, trading, distribution and retailing, cafés and restaurants operation, and investment holdings.

Agrolane

7.2C4-02(02)

Address: 格鲁吉亚 Georgia Imereti-Bagdati region-Vartsikhe village
Tel: +995 322 305 828
Email: george.gviniashvili@agrolane.ge
Web:

Our company has two directions in business: 1. Growing, packing and distributing of blueberries. We are ready to offer blueberries for fresh market in retail 125g packaging 2. Production and distribution of brandy, which we do call Chacha (42% alc by vol), from natural fruits (without any artificial additives): Blueberry, Persimmon, Feijoa, Quince, Pumpkin, Pear and Apple.

"GFC KULA" Ltd

7.2C4-02(03)

Address: 格鲁吉亚 Georgia Georgia-Gori-17 Shindisi Road
Tel: +995577409409
Email: office@kula.ge
Web: www.kula.ge

Gori feeding cannery "KULA" produces more than 250 names of canned product: natural juices, compotes, jams, preserves, salads, sauces, pickles and tomato product. All of them is natural and doesn't contain any concentrates, preservatives, colorings or other extra artificial additives.

NUTSGE LTD.

7.2C4-02(04)

Address: 格鲁吉亚 Georgia Georgia-Zugdidi-8 Gamsakhurdia Ave.
Tel: +995592900090
Email: info@nutsge.com
Web: www.nutsge.com

NUTSGE LLC is a Georgian Hazelnut Processing and Exporting Company. It was established in 2012, based on the 18 years of Hazelnut Business Experience of the Founders. The company operates 2500m² production area in compliance with EU standards and produces all range of Hazelnut Products of Premium Quality.

Georgian Vine and Wine Company Lts - Shilda WInery

7.2C4-02(05)

Address: 格鲁吉亚 Georgia Georgia-Tbilisi-106, T.Tabidze Str, 0162
Tel: +9955322971716
Email: kh.benidze@shilda.com i.mgaloblishvili@shilda.com
Web: www.shilda.com

Founded in 2015, SHILDA winery is located in Kakheti - the principal region of viniculture in Georgia. The Winery offers 17 varieties of wine that includes both standard (11 wine varieties) and premium (6 wine varieties) wine lines. The company also produces high alcohol drinks: Georgian Brandy, Grape Vodka and Chacha

JSC Teliani Valley

7.2C4-02(06)

Address: 格鲁吉亚 Georgia Telavi-3 Tbilisi Highway, 2200
Tel: 00995322313246
Email: k.puturidze@telianivalley.com
Web: www.telianivalley.com

Telianiu山谷是一个品牌，以其名义生产了一个多世纪的格鲁吉亚葡萄酒。在这100年的时间里，我们传承了8000年前从格鲁吉亚生产高品质葡萄酒的价值观，同样的理念，历史和传统。公司“Teliani谷”是格鲁吉亚市场十多年的领导者。
Teliani Valley is a brand, under the name of which Georgian wine has been produced for more than a century. During all these 100 years we shared the same values, the same philosophy, history and traditions we inherited from our ancestors 8000 years ago while producing high quality wines from Georgia. Company "Teliani Valley" is a leader of Georgian market for more than ten years.

Dugladze wine company

7.2C4-02(07)

Address: 格鲁吉亚 Georgia Georgia-Tbilisi-8 Chantladze, orkhevi, Tbilisi, Georgia
Tel: +995577220077
Email: sh.onashvili@dwc.ge
Web: www.dwc.ge

Dugladze Wine Company is one of the leading alcohol production companies in Georgia, operating since 2004. The company focusing on delivering high quality products - still wines, sparkling wines, brandy and chacha to its customers.

JSC Kotekhi - winery of Gurjaani

7.2C4-02(09)

Address: 格鲁吉亚 Georgia 1500-Gurjaani-K. Qoroglishvili str. 38
Tel: +995577220077
Email: sh.onashvili@dwc.ge
Web:

History of Guremani goes back to 1976, when one of the largest winery was built in Georgia. For years it has been one of the leading wine producers. The location of the factory was specifically chosen to be the city of Gurjaani, which was called "Guremani" in the Middle Ages. The city was known as a place where the best Georgian grape varieties grew due to climate and soil characteristics.

Kakhetian Traditional Winemaking

7.2C4-02(16)

Address: 格鲁吉亚 Georgia Tbilisi-12 S.Tsintsadze Str.
Tel: +995595997515
Email: m.mamulashvili@ktw.ge
Web: www.ktw.ge

Kakhetian Traditional Winemaking is one of the largest wine and spirits producing companies in Georgia and Caucasus region. Established in 2001, KTW produces wine, brandy, sparkling wine and chacha with traditional Georgian techniques mixed with the state of art technologies.

Georgian Beer Company JSC

7.2C4-02(23)

Address: 格鲁吉亚 Georgia Mtskheta-Saguramo village
Tel: +995322437770
Email: L.osepashvili@geobeer.ge
Web: www.geobeer.ge

ZEDAZENI brewery is a part of a group with 25 years history in beverages production. Brewery is equipped with most up-to-date equipment from best European producers, holds FSSC 22000 certificate and offers high quality products based on 100% natural ingredients. Product range includes domestic and international brands of beer, CSD, juices, energy drinks and ice tea.

GPR榛子 / GEORGIAN PRODUCTS RENAISSANCE LTD

7.2C4-02(11)

Address: 格鲁吉亚 Georgia Georgia-KHOBI-234 TSOTNE DADIANI STR,, WWW.GPRNUTS.GE
Tel: 00995322505070
Email: baia@gprnuts.ge
Web: www.gprnuts.ge

GPR是2013年开始生产榛子的家族企业。公司在佐治亚州东部和西部拥有两家制造工厂，为全球客户提供高品质的产品。公司获得BRC AA级认证，并出口美味的榛子，生核和烤加工榛子到中国，欧洲，中东和北美和南美。www.gprnuts.ge
GPR is family owned business started hazelnut production in 2013 year. Company ownes two manufacturing facility in East&West part of Georgia, doing exclusively high quality products for customers worldwide. Company is BRC AA level certified and exporting delicious inshell hazelnut, raw kernels and roasted processed hazelnut to China, Europe, Middle East and North&South America. www.gprnuts.ge

LLC Qimerioni

7.2C4-02(17)

Address: 格鲁吉亚 Georgia Tbilisi-73 I. Abashidze Str.
Tel: +995322180793
Email: archvadzenikoloz@gmail.com
Web: www.qimerioniwines.com

QIMERIONI Winery is dedicated to producing premium wines of exceptional quality from vineyards situated in Georgia's most acclaimed winemaking region Kakheti, namely in village Chumlakhi of Gurjaani District.Founded in 2011 QIMERIONI is a quality driven wine company whose varietal focus is traditional Georgian grapes Saperavi, Rkatsiteli, Aleksandrouli, Mujuretuli, Mtsvane and Usakhelauri.

Bolero & Company

7.2C4-02(25)

Address: 格鲁吉亚 Georgia-Tbilisi-13 Marshal Gelovani Ave. Georgia Georgia-Tbilisi-13, Marshal Gelovani Ave., floor 9;
Tel: +995 322433322
Email: Tika.endeladze94@gmail.com info@bolero.ge
Web: www.bolero.ge

We are one of the largest winery in Georgia operating in the field of bottled alcohol as well as wholesale segment of bulk spirits.The Company is export oriented and aiming to reach fast growing markets throughout the world. Our factory was established in 1929 and it represented the central enterprise. It's capable of processing 50000 tons of grapes per season.

Georgian Wines Ltd

7.2C4-02(13)

Address: 格鲁吉亚 Georgia Tbilisi-Tbilisi 0162-Kakheti Ave 129
Tel: +995322407818
Email: info@georgianwines.com
Web: www.georgianwines.com

Winery and Vineyard.

Aromaproduct Ltd

7.2C4-02(19)

Address: 格鲁吉亚 Georgia TBILISI-TBILISI-17 GURAMISHVILI AVE.
Tel: +995 322 613356
Email: kai.t@foxmail.com VGUGUSHVILI@AROMA-USA.COM
Web: www.aroma.ge

Aromaproduct is a world leading fruit and vegetable processing company,specializing in production of natural organic juices and other natural products.We have more than 1000 hectares organic farm under the Great Caucasus. It helps to guarantee the supply of raw materials and track down the origin.All our products have been certified by Halal,Kosher,ISO and Organic.

LTD "SVI"

7.2C4-02(26)

Address: 格鲁吉亚 Georgia Tbilisi-Ninishvili 8
Tel: +995322382670
Email: ma.abesadze@gmail.com
Web:

LTD "SVI" is Georgian wine producer. We produce and distribute first Georgian semi-sparkling wine on tap.

Chelti winery

7.2C4-02(27)

Address: 格鲁吉亚 Georgia 0186-Tbilisi-62/18 Vaja Pshavela Ave
Tel: +995593888388
Email: andria@chelti.com
Web: chelti.com

The wine company "Chelti" was founded in 2001. It is located in Kakheti, in region of Kvareli, village Shilda, on the bank of the river Chelti. The complex is cultivated on 80 hectares and includes vineyards, wine factory, production cellar, wine aging, very beautiful orchards linden alley and restaurant. Winery Chelti does international trade and has operations in 9 countries.

JSC Sarajishvili

7.2C4-02(28)

Address: 格鲁吉亚 Georgia Georgia-Tbilisi-4 Sarajishvili Ave.
Tel: +995595555454
Email: a.vashalomidze@sarajishvili.ge
Web: www.sarajishvili.ge

The first Georgian wine brand was created thanks to tireless efforts and tremendous desire of David Sarajishvili. He was the one to establish the first classical brandy making technology in Georgia and to produce the cognac. Sarajishvili has not only introduced the European wine making technologies in Georgia, but also conducted a study of the Georgian climate and soil for choosing right Georgian.

LTD Campa

7.2C4-02(31)

Address: 格鲁吉亚 Georgia Mtskheta District-Saguramo-Village of Saguramo
Tel: +9950322400550
Email: g.lomtadze@campa.ge
Web: campa.ge/en#home

LTD Campa - Georgian juice company producing premium quality natural juices, nectars and juice drinks. Campa was established in 2008 and has been operating for more than 10 years. Campa incorporates 3 brands - 24 SKUs in 1L packages, 15 SKUs in 0.2 L packages. The company exports to international markets.

Wine Guards LLC

7.2C4-02(35)

Address: 格鲁吉亚 GeorgiaTbilisi
Tel: +86 182 2141 7270 / 995 599 33 2728
Email: gfta_ge@163.com
Web: gchichua1989@gmail.com

For thousands of years wine has been regarded as the treasure of Georgia. Generation by generation, wine guards have been protecting and nurturing vineyards with life commitment. We as successors, are inheriting the legacy of being the gurdians.

IDS Borjomi Georgia

7.2C4-02(29)

Address: 格鲁吉亚 Georgia Tbilisi-Aghmashenebeli ave 80,
Tel: +995 322 484 484
Email: lshelia@borjomi.com
Web: www.borjomi.com

BORJOMI is a brand of water millions of people around the world know and love. Every drop of this water is priceless: BORJOMI is born in Georgia's volcanic depths, rises many kilometers up to the surface while getting enriched with unique minerals on its way, and then is produced, most carefully, from springs in the BORJOMI Gorge but only in the quantities that could be naturally reproduced.

JSC Telavi Wine Cellar

7.2C4-02(32)

Address: 格鲁吉亚 Georgia Telavi-Vil. Kurdgelauri
Tel: +995350273707
Email: marani@marani.co
Web: www.marani.co

Relentless improvement has been part of TELAVI WINE CELLAR from her very foundation and continues to this day. Modern day technology, with stainless steel insulated tanks, pneumatic presses, gentle movement pumps and overall temperature control system shares the room with oak vats, barriques and traditional clay vessels, Kvevri, buried in the earthen floor of the great cellar, which we call our Ma.

JSC Hantangyuan International Holding Group

7.2C4-02(36)

Address: 格鲁吉亚 Georgia Tbilisi-V. Kupradze str., N72, Building N10, apt. N36
Tel: +995595990195
Email: geosourcing@gmail.com
Web:

We are manufactures of Georgian tea, our major market is China. We also export Georgian Natural mineral water SNO to China. We are trying to market othe Georgian products as well in China, such as honey and dried fruits.

Kartveli LTD.

7.2C4-02(30)

Address: 格鲁吉亚 Georgia Tbilisi-Kakheti Highway110a, 0198
Tel: +322 308084
Email: info@jimsher.com
Web: www.jimsher.com

Company Kartveli is a producer of first Georgian Whiskey 'Jimsher', as well as Gerogian wines and brandy.

Besini Company LTD

7.2C4-02(33)

Address: 格鲁吉亚 Georgia Georgia-Tbilisi-19 Gamrekeli str., 0160,
Tel: +995322372824
Email: tornike@besiniwine.ge
Web: www.besiniwine.ge

The history of Besini Winery starts in 2004 when the company owners came together in Tsinandali, Kakheti, and planted our first vineyards after selection of right soil and high quality vines, in order to harvest top quality grapes for our extraordinary wines.Besini Winery has been producing the finest wines for more than a decade, using Georgian endemic as well as world-famous grape varieties.We.

Caucasus Organic Fruits Ltd.

7.2C4-02(34)

Address: 格鲁吉亚 Georgia Tbilisi-Tbilisi-0159, Iuri Gagarin Street N24
Tel: +995551130604
Email: salomealania@gmail.com
Web: caucasus-organic.com

Caucasus Organic Fruits Ltd. located in Georgia, bear its capital Tbilisi, is a German-Georgian joint venture established to make high-quality dried fruits and vegetables available to customers worldwide. Since its start of operations in autumn 2017 the company processes in accordance with the highest international standards regarding quality and traceability.

SAKARTVELO LTD

7.2C4-02(37)

Address: 格鲁吉亚 Georgia Shida Qartli-Gori-Georgia, 1400, Gori, Shindisi Highway #19
Tel: +995577024201
Email: empirewines@mail.ru
Web:

The company SAKARTVELO LTD was established in 1997 and since we have a big experience in working with many partners from all over the world. The aim and strong side of our company is quality of the product and service .

Lavender Bay Beverages Pty Ltd

7.2C4-03

Address: 澳大利亚 Australia New South Wales-Sydney-Suite74 Level35, Tower one, 100 Barangaroo Avenue
Tel: +61280466990
Email: info@lbbeverages.com
Web: www.lbbeverages.com

乐湾达公司位于悉尼，采用原产自澳大利亚本土的各种天然植物，经独立自主的内部研发团队与植物提取方面位于世界前沿领域的欧洲实验室合作，联合研发新型植物健康饮品。我们突破传统分销渠道的局限，定位于澳大利亚，中国，日本，欧洲和北美地区的中高端市场。采用先进的生产技术，遵循业界质量管控的高标准，致力于丰富健康功能性饮品大家庭，满足时尚健康人群不断提升的消费需求。
The company was established to produce natural functional drink with extracts from natural organic plants and herbs. The company sources most ingredients in Australia as well as some native plant growers from Europe. The R&D team develops new products both in-house, and in collaborating with world class plants extract laboratories.

Maison Blue PTY LTD

7.2C4-06

Address: 澳大利亚 Australia SA-Aldinga-46 Little Road
Tel: +61 8 85578571
Email: info@maisonblue.com.au
Web: www.maisonblue.com.au

Maison Blue is located in the heart of Australia's famous wine region, McLaren Vale. Every day of our lives, we are passionately focused on providing our customers with Australia's highest quality wine. We produce superb red wines, white wines, sparkling wines and rosé.

MASTER TEA & SPICES (PVT) LTD

7.2C4-09

Address: 斯里兰卡 WELIPILLAWA DAIDIGAMUWA-WELIPILLAWA DAIDIGAMUWA-NO. 679118, WALPITA RD, POLHENA Sri Lanka WELIPILLAWA DAIDIGAMUWA-NO. 679118, WALPITA RD, POLHENA
Tel: +86 21 67643621
Email: schadow.chen@poweresr.com
Web:

Master Tea & Spices (Pvt) Limited, was incorporated as a Private Limited Liability Company, under the Companies Act No.7 of 2007 and have been approved both by the Export Development Board and Sri Lanka Tea Board. Our Vision is to be the leading supplier in Sri Lanka for Natural Herbs & Spices for the food industry and to introduce healthier value added products for Tea & Spices.

HONORLAND INC

7.2C4-04

Address: 美国 United States of America CA-Davis -1809 Arena Drive
Tel: +1 530 761 8086
Email: L2435739566@gmail.com
Web:

Export of Farm food agricultural products and wine made in USA.

Jia Yuan Hua Australia Pty Ltd

7.2C4-07

Address: 澳大利亚 Australia SA-Adelaide-703 / Level 7, 431-439 King William Street
Tel: 0433139911
Email: VIVIANZHANGJIAYUANHUAWINES@HOTMAIL.COM
Web: www.monteperle.com.au

澳洲嘉园华酒业公司成立于2017年3月，旗下拥有自主品牌Monteperle，合作品牌Sieber Wines。本公司是集葡萄种植管理，葡萄酒酿制，葡萄酒文化特色于一体的全产业链公司。
Established in March 2017, Jia Yuan Hua Australia Pty Ltd owns its own Monteperle brand and its cooperative brand Sieber Wines. Jia Yuan Hua Australia Pty Ltd is an industrial chain company integrating grape planting management, wine making and wine culture.

NATYRAL ATC

7.2C4-10

Address: 阿尔巴尼亚 Albania DURRES-L.14 Shkozet 2001
Tel: +355692066155
Email: sales@natyral-atc.com
Web: www.natyral-atc.com

ALBANIAN SAGE HERBAL TEA.

保乐力加集团 / Pernod Ricard

7.2C5-01

Address: 香港地区 Tsimshatsui-Kowloon-中国香港 Hong Kong Kowloon-Tsim Sha Tsui-15 Canton Road
Tel: +8621 2301 1368
Email: helen.zhengi@pernod-ricard.com helen.zheng@pernod-ricard.com
Web:

保乐力加集团在全球烈酒和葡萄酒行业排名第二，2018财年的合并销售额为89.87亿欧元。自1975年由Pernod和Ricard两家公司合并，拥有一系列享誉世界的品牌，如：绝对伏特加、力加（茴香酒）、百龄坛、芝华士、皇家礼炮和格兰威特（苏格兰威士忌）、尊美醇（爱尔兰威士忌）、马爹利（干邑）、哈瓦纳俱乐部（朗姆）、必富达（金酒）、马利宝（力娇酒）、玛姆和巴黎之花（香槟）以及杰卡斯、博岚歌葡萄酒等。
World's n ° 2 in wines and spirits with €8,987M sales in FY2018. Created in 1975, holds one of the most prestigious brand portfolios: Absolut Vodka, Ricard pastis, Ballantin's, Chivas Regal, Royal Salute and The Glenlivet Scotch whiskies, Jameson Irish whiskey, Martell cognac, Havana Club rum, Beefeater gin, Malibu liqueur, Mumm & Perrier-Jouët champagnes and wine.

UBT CORPORATION LTD.

7.2C4-05

Address: 牙买加 Jamaica Kingston-Kingston-Lot 68-69 Caracas Drive, Kingston Free Zone, Kingston 15, Jamaica W.I.
Tel: 876-758-9236
Email: brandonl@ubtjamaica.com
Web: www.jbmcoffee.cnubtjamaica.com

公司成立于2004年，一直致力于做五金产品的进口与批发。公司从2015年开始做牙买加蓝山咖啡产品，并在去年牙买加的其他公司携带着我们的咖啡组团参加了第一届的进博会，并且作为牙买加指定咖啡产品进入了国家馆。今年我们自己携带着更多的牙买加当地的好食品参加了进博会,比如朗姆酒，调味品等等一些其他具有当地特色的产品。
UBT Corporation Ltd. was founded in 2004, it is a large hardware wholesale company.We started to work on Jamaica Blue Mountain Coffee in 2015. Last year, we participated in the first CIIE and our coffee entered into the National Pavilion as the designated coffee product of Jamaica. This year we will participate in CIIE by ourselves with more good local Jamaican food,such as rum,condiments etc.

艺邦酒业公司 / YIPONT BREWING CORP

7.2C4-08

Address: 加拿大 Canada BC-ABBOTSFORD-1A-30321 FRASER HWY
Tel: 13679250724
Email: 476423741@qq.com
Web: www.oldabbeyales.com

本公司是卑诗省艾伯斯福德市第一家也是最大的一家精酿啤酒厂。公司产品是在欧洲比利时传统的酿酒工艺基础上，结合当今最流行的北美风格由著名的酿酒师STEVE BLACK主持精心研制的，覆盖从刚刚接触精酿啤酒的初级者所喜爱的BLONDE ALE，到啤酒发烧友所钟爱的DOUBLE IPA等各个不同的人群，曾多次获得国家及省级的评比大奖。目前有7种常年提供的主打产品以及30余种季节性及限量版的啤酒。
Old Abbey Ales opened its doors and it is the first and biggest craft beer brewery in Abbotsford. It was traditonal Belgian style brewery at the beginning and was turn the most popular North Amercian style now. Brewing techniques and elaborate formulas have been given to future generations of brewers who have created a high level of taste and quality that we see in modern brewing today.

Makaliukas

7.2C5-02(02)

Address: 立陶宛 Lithuania Vilnius-Balbieriškis-iaudutiškio g. 1
Tel: +37062911111
Email: ciaudutiskis@gmail.com
Web:

Storage room.

Grainmore JSC

7.2C5-02(03)

Address: 立陶宛 Lithuania Trakai distr.-Senieji Trakai -Pla ioji str. 27
Tel: +37061557347
Email: z.palubaitis@grainmore.com
Web: www.grainmore.com

GRAINMORE is the biggest and most modern producer of granola and oat flakes in Lithuania. The company has BRC, HALAL, KOSHER certificates, manufactures products for Lithuanian and foreign markets packing them into retail packaging and bulk.

Mantinga

7.2C5-02(06)

Address: 立陶宛 Lithuania Marijampole-Stoties st. 51
Tel: +370 343 36396
Email: ucerniauskaite@mantinga.lt
Web: www.mantinga.lt

Mantinga 是一家生产冷冻烘焙和方便食品的公司。出色的技术知识、持久的产品创新和灵活性使我们能够满足客户的要求。波罗海国家中 Mantinga 拥有品种最广的产品之一，能够提供最高质量的产品。
Mantinga is a company of frozen bakery and convenience food. Great technological knowledge, everlasting product innovations and flexibility enables us to meet the demands of our customers. Mantinga has one of the widest assortments in the Baltic States and can offer products of highest quality.

JSC PIENO ZVAIGZDES

7.2C5-02(09)

Address: 立陶宛 Lithuania Lithuania-Vilnius-Perkunkiemio str. 3, LT-12127
Tel: +370 5 2461420
Email: G.Zigutis@pienozvaigzdes.lt
Web: www.pienozvaigzdes.lt

JSC "Pieno žvaigžd s" is privately owned company which specializes in milk processing. It has taken advantage of consolidation of Lithuanian dairy sector and was established through a merger of a few Lithuanian processors in 1998.

"Shirvan wines" LLC / Shirvan Wines LLC

7.2C5-03(02)

Address: 阿塞拜疆 Azerbaijan Shamakhi District, Meysari village
Tel: +994125650040
Email: info@shirvanwines.az
Web: www.shirvanwines.az

The vineyard and winemaking complex of "Shirvan wines" LLC aims to contribute to the development of wine tourism in Azerbaijan and to take decent places in the field of organic wine production.

Imlitex Textile

7.2C5-02(04)

Address: 立陶宛 Lithuania Kaunas-Europos pr. 124
Tel: +86 755 2691 2396
Email: giedrius@imlitex.cn
Web:

因密特斯（深圳）贸易有限公司是立陶宛因密特斯集团在亚洲区中国区域分公司，主要负责集团公司在中国和其它亚洲国家的采购和进出口业务。因密特斯中国进口预包装食品有宝宝有机米糊贝欧格米MAMUKO，天然矿泉水AKVILE，无添加冷榨果汁NTRL，醇香咖啡AROMA GOLD等，可进口食品谷物和欧洲冷冻越橘、坚果类食品原材料。
Imlitex (China) Trading Co. Ltd. is a part of Imlitex Holdings - is the most diversified commodity and raw materials distribution group in Baltic region. Our activities are grouped into 9 business segments based on different products: Agro, Biofuel, Energy, Food, Industry, Package, Plastics, Services, Textile. Today, we have trade relations in 70 countries worldwide, with our main trade in Europe.

Vilniaus alus

7.2C5-02(07)

Address: 立陶宛 Lithuania Vilnius-Vilnius-Arimu g 29,
Tel: +370 610 71191
Email: goda@vilniausalus.lt
Web: www.vilniausalus.lt

Organic craft beer brewery from Lithuania. Unique franchised beer stores of tap beer.

MELT WATER, UAB

7.2C5-02(10)

Address: 立陶宛 Lithuania, Klaipeda-Pamiskes str. 7, Svepeliai, Dovilu ward
Tel: +37068573179
Email: Yongling@melt-water.lt
Web: www.meltwaterislife.com

"MELT WATER", UAB is a producer of high-quality premium bottled water. Inspired by nature, MELT WATER water is produced using a unique proprietary technology which mimics the natural formation and melting of glaciers and involves a complex and multi-stage process of freezing, extracting and melting the "core" ice.

Ismayilli Sharab LLC

7.2C5-03(03)

Address: 阿塞拜疆 Azerbaijan ISMAILLI-ISMAILLI-Hajihatamli village
Tel: +994502207464
Email: azer.allakhverdiyev@chabiant.az
Web: www.ismailliwine.com

Wines production.

Gudobele JSC

7.2C5-02(05)

Address: 立陶宛 Lithuania Lithuania-Kaisiadorys-J. Basanaviciaus 37 B
Tel: +37065512608
Email: export@gudobele.lt
Web: www.gudobele.lt

Founded in 1994, today JSC "Gudobele" is amongst Top 5 largest bakeries in Lithuania. We follow ancient traditions to bake authentic, natural and fresh bread and bread crisps.
We have in our assortment bread crisps "Bon Chance" and oven baked "Bon Joy".

Daumantai LT

7.2C5-02(08)

Address: 立陶宛 Kaunas-Kedainiai-A. Mickeviciaus 1 Lithuania Kedainiai-A. Mickeviciaus 1
Tel: +37034767020
Email: daumantai@daumantai.lt
Web: www.daumantai.lt

We are manufacturer of organic and conventional ketchup, mayonnaise BBQ sauce and other condiments.

Sun Food LLC

7.2C5-03(01)

Address: 阿塞拜疆 Azerbaijan Baku-Baku-Azerbaijan, Baku, Z.Bunyatov avenue, 2084 district, Postal Code (AZ 1029) Tel: 5143682
Tel: +994125143682
Email: elmar.mustafayev@azersun.com
Web: www.azersun.com

Manufacturer, Distributor, importer and exporter, retailer of food products.

Aznar CJSC

7.2C5-03(04)

Address: 阿塞拜疆 Azerbaijan Geokchay-Natavan street 120
Tel: +994202740517
Email: export02@aznar.az
Web:

Aznar is one of the largest and oldest pomegranate juice producers in Azerbaijan. Our specialty is producing 100% natural juices from unique and healthy fruits like Pomegranate, Quince, Feijoa, and others. The brand Grante was one of the first to produce pomegranate juices not from concentrate.

Aspi Agro LLC

7.2C5-03(05)

Address: 阿塞拜疆 Azerbaijan Gabala-Gabala region, Zarifa Alieva street 10
Tel: +994124413461
Email: timur@aspiwinery.az
Web: www.savalan.az

Growing grapes and producing high quality wines, vodka and etc.

Merit Brand LTD

7.2C5-03(08)

Address: 阿塞拜疆 Uzun Boyat-Shabran-Shabran c. Uzun Boyat v. Azerbaijan Shabran c. Uzun Boyat v.
Tel: +994125619661/104
Email: i.farhad@merit-brand.com
Web: www.merit-brand.com

Alcohol producer.

Gilan FMCG Trade and Distribution

7.2C5-03(11)

Address: 阿塞拜疆 Azerbaijan Azerbaijan-Baku-Chinar Park Business Centre 4A Block
Tel: +99402907095 +994502907095
Email: azer.majidII@gilanfmcg.az
Web: www.gilanholding.com

In order to be able to supply our products to any destination worldwide, we have obtained all required international quality and compliance certificates, including quality management (ISO 9001-2008), food safety management (ISO 22000), compliance with organic and Kosher requirements. The company policy ensures timely recertification to maintain the compliance and support smooth export operations.

Sharg Ulduzu LLC

7.2C5-03(14)

Address: 阿塞拜疆 Azerbaijan Azerbaijan-Shamkir-Baku - Gazakh highway 388th km
Tel: +994 2230 59099
Email: k.alirzayev@gmail.com
Web: www.shargulduzu.com

"Sharg Ulduzu" Limited Liability Company has a special place in the developing winemaking industry in Azerbaijan. A business plan gradually implemented by Company founded in 2002 is one of the great projects in Azerbaijani winemaking. Within this project, the company aims to apply modern technologies and manufacture high-quality wine and brandy products.

Balkhurma LLC / Marandi LLC

7.2C5-03(06)

Address: 阿塞拜疆 Novkhani -Baku-Yasamal district, Suleyman Dadashov street, house 6, appt. 33 Azerbaijan Novkhani -AZ0199, Shikhlinski str, Absheron district
Tel: +994 12 5395392 / (+99412) 505 42 44
Email: sales@balxurma.az info@firelandvineyards.com
Web: www.balxurma.az www.firelandvineyards.az

Balkhoorma LLC has been set up to taste 100% natural-grown persimmon in ecologically clean districts of the region The winery "Marandi Wine Company" is the place where Azerbaijani traditions of viticulture and winemaking intertwined with modern European technologies.

Jalilabad Wine -2 OJSC

7.2C5-03(09)

Address: 阿塞拜疆 Azerbaijan Bakı-Azerbaijan. Baku/ Izmir 9 AZ1521
Tel: +994502350335
Email: farid-ramazanov-1992@mail.ru
Web: www.jwine.az

"Jalilabad wine-2" was founded in 1972 and is one of the first wineries in Azerbaijan. Production at Jalilabad winery is based on the latest technologies. Based on the basis of the former winery production and processing enterprise, was privatized in 2007 through an investment tender. The winner of the competition, "Jalilabad wine-2", replaced the old technology with new ones, creating an enterpri.

Caspian Coast Winery and Vineyards LLC

7.2C5-03(12)

Address: 阿塞拜疆 Azerbaijan Siazan region, Boyuk Hamya v.
Tel: +994233041643
Email: ccwv@mail.ru
Web: www.caspiancoast.az

manufacture.

Balkhurma LLC / Balkhoorma LLC

7.2C5-03(15)

Address: 阿塞拜疆 Azerbaijan Baku-Yasamal district, Suleyman Dadashov street, house 6, appt. 33
Tel: +994 12 5395392
Email: sales@balxurma.az
Web: www.balxurma.az

Production of dry and semi-dry fruits.

Azeri LLC

7.2C5-03(07)

Address: 阿塞拜疆 Azerbaijan AZERBAIJAN REPUBLIC-Baku-Jamal Hacialiyev str.28D,AZ1026,
Tel: 13817796698
Email: annavei888@yahoo.com
Web:

Vodka "BLACK EAGLE" is an alcoholic beverage produced by AZERI LLC in 2017. AZERI LLC is already on the market of alcoholic beverages of Azerbaijan known under the brand name of "NZS" beer, and covers a wide range of its products.The recipe for "BLACK EAGLE" is based on the classic Russian vodka. Ingredients: ethyl alcohol, obtained from wheat grains "lux", with softened and "reverse osm

A+Co (Xirdalan Serab)

7.2C5-03(10)

Address: 阿塞拜疆 Azerbaijan Absheron-Baku-Absheron district, Khirdalan city, Hasan Aliyev ave. 28
Tel: +994502105030
Email: elnur_alizade@mail.ru
Web: xirdalanserab.az

"Xirdalan rab" began its activity in 2006 with the launch of the well-known wines "Qızıl Qaya", "Kaqor", "Qara Üzüm", as well as cognacs" irvan", "Yubiley".Since 2008, the company included vodka in its product range, and in a short time became known for its popular brands of vodka "New Brand", "Siberian Ruby", "Miracle Key", "Bear" and "Rainbow".

AGRO-AZERINVEST LLC

7.2C5-03(13)

Address: 阿塞拜疆 Azerbaijan Azerbaijan-Qabala-34, E.KARIMOV str.
Tel: +994124655025
Email: jeyhun.aliyev@gilanagriculture.com
Web: vine.az

Wine production.

Az-Granata

7.2C5-03(16)

Address: 阿塞拜疆 Azerbaijan Pirhasanli-Agsu-Agsu, Pirhasanli
Tel: +994125642121
Email: nrahimova@moderngroup.az
Web: www.azgranata.az

Az-Granata is one of the largest beverage producers in the South Caucasus region, which was founded in 2011. It produces fruit juices, concentrates, compotes, wines and vodka. Main focus of exports: pomegranate juice and concentrate. Plant area is 2.5 ha. Az-Granata pomegranate production (pomegranate juice and concentrate) has been certified organic by KIWA Institute GmbH, Germany.

ASK Shaki sharab Ltd

7.2C5-03(19)

Address: 阿塞拜疆 Azerbaijan Shaki-Shaki region, Kalabakhan settlement
Tel: +994120242461583
Email: ask-shekisherab@mail.ru
Web: onthereconstruction

Production of the wines.

TAJ LLC

7.2C5-03(22)

Address: 阿塞拜疆 Azerbaijan Baku-7/100, Ruslan Allahverdiyev str.
Tel: +994124472991
Email: surayya@tajbev.com
Web: www.tajbev.com

TAJ Company was founded in 1997 as a private enterprise and has been taking a worthy place in the domestic market for more than 20 years. The main scope of activity of TAJ LLC are production of bottled carbonated, still drinking water and non-alcoholic beverages, starting from purchasing, including receipt of raw materials, preparation, processing, packing up to delivery and customer service.

BakuKonserv JSC

7.2C5-03(17)

Address: 阿塞拜疆 Azerbaijan Baku-Baku-AZ1141, Baku, A.Jamil 64/66
Tel: +99412 510 10 11
Email: info@bakukonserv.com
Web: www.bakukonserv.com

Our company produce natural pomegranate juice,pomegranate concentrate, also different types of juices and jams

Gunel-3 LLC

7.2C5-03(20)

Address: 阿塞拜疆 Azerbaijan Narimanov-Baku-Ziya Bunyadov street 2096
Tel: 00994125143394
Email: ramin.ismayilov@ozgadabay.com
Web: www.ozgadabay.com

Gunel-3 LLC was established in 1993. We produce "OzGadabay" bottle water and "Barli" (compote, fruit, jams, narwerab, tomato, pickles). Our products are exported to Canada , Israel and Russia. Starting from 2018 we have started selling the products in domestic market in Azerbaijan.

Ulduz Chocolate Factory / Veyseloglu yayicili qardashlar LLC

7.2C5-03(24)

Address: 阿塞拜疆 Azerbaijan Baku-Keshle district, Ikinci enine street, 2
Tel: +994 12 447 4011
Email: elnur.allahverdiyev@ulduz.com.az
Web: www.ulduz.com.az

Chocolate Factory "ULDUZ" is the company producing a wide range of chocolate products. Today the products are exported to 20 countries of the world. "ULDUZ" has been awarded with the International Certificates – BRC (A grade), IFS, HALAL, ISO 22000:2005, FSSC 22000:2010 and OHSAS 18001:2007.

Absheron Sharab LLC

7.2C5-03(18)

Address: 阿塞拜疆 Azerbaijan Baku-Mehdiabad setellement,AZ 0118,Absheron district,Dostlug ave. 1
Tel: +99412 343 18 00
Email: gasimove077@gmail.com
Web: absheron-sharab.az

Our winery was established in 1967. ?This is one of the leading wine and spirits producers in Azerbaijan. ?After the collapse of the Soviet Union, it was privatized and re-registered in 2003. ?Up-today-equipped Absheron-Sharab OJSC produces more than 70 kinds of wines, cognacs, whiskey, fruit liqueurs, fruit vodkas and other alcohol beverages.

Crispa Snacks LLC

7.2C5-03(21)

Address: 阿塞拜疆 Azerbaijan Baku-Khatai District. N.Rafiyev Str. 12
Tel: +994502714040
Email: nahid.jabbarov@crispa.az
Web: www.crispa.az

The "Crispa Snacks" LLC is an Azerbaijan based healthy snack production company that has been operating since the beginning of 2018. We properly produce quality dried apple chips, consist of Royal Gala (red) and Granny Smith (green) varieties. Crispa Snacks LLC plans to increase product varieties in a short time.

Bollug LTD MMC

7.2C5-03(25)

Address: 阿塞拜疆 proviance-city-Az rbaycan , Bakı h ri, Nizami rayonu , Böyük or q s b si, 8 ci köndl n 5)Azerbaijan Baku-Absheron region, Baku-Sumgait highway, 13-th km
Tel: +994123478312
Email: office@bolluq.az
Web: www.bolluq.az

Production-distribution company.

Naiq's Co Tovuz Baltiya LLC

7.2C5-03(26)

Address: 阿塞拜疆 Azerbaijan Tovuz region-374808 Ibragimli village
Tel: +99412 4300043
Email: tovuz-baltiya@naigco.com
Web: www.naigco.com

the cultivation of grapes and the production of wine.

Agrarco LLC

7.2C5-03(26)

Address: 阿塞拜疆 Azerbaijan Azerbaijan-Baku-Nasimi distr., Neftchilar avenue, ap. 153
Tel: +994123100251
Email: office@agrarco.az
Web: agrarco.az

Agrarco LLC is an export-oriented company and engaged in hazelnuts production and processing, also has fruit orchards – realizing export of fresh apples. Hazelnuts and apples are exported under brand "Aqrovest".

巴基斯坦MFTC公司 / MESKA Y & FEMTEE TRADING COMPANY (PRIVATE) LIMITED

7.2C5-04(03)

Address: 巴基斯坦 卡拉奇-Room No.1511 - 1513, Saima Trade Tower "B" I.I. Chundrigar Road Pakistan Karachi-Room No. 1511 - 1513, Saima Trade Tower "B" I.I. Chundrigar Road
Tel: 010-83918799
Email: Xiaoxin@norinco.cn
Web:

MFTC公司成立于2006年，是巴基斯坦领先的粮食贸易和加工企业。MFTC致力于大米、小麦及其他粮食作物的贸易和出口。自创立之日起，MFTC公司已经向客户交付了无与伦比的高品质产品，并具备高度的贸易信誉。
Established in 2006, Meskay & Femtee Trading Company (Pvt) Ltd (MFTC) is a leading grain trading, milling and processing company of Pakistan; MFTC specializes in the trading and export of rice and wheat among other grains. Since its inception MFTC has delivered unparalleled quality while upholding the highest standards of business ethics.

迪易克斯电子商务公司 / Dubai E Commodity Exchange Limited

7.2C5-04(08)

Address: 阿联酋 迪拜-Office No.506, B- Block Centurion Star Tower Opp. Deira City Center Port Saeed, P.O. Box 64827,Deira United Arab Emirates Dubai-Office No.506, B- Block Centurion Star Tower Opp. Deira City Center Port Saeed, P.O. Box 64827,Deira
Tel: 010-83918799
Email: Xiaoxin@norinco.cn
Web:

DECX是迪拜第一个全球小宗农产品交易平台。该平台通过与招商局青岛合资成立的五通公司货权“仓单”来服务包括农民、贸易商、加工商、出口商以及消费者在内的所有市场参与者，从而改变全球的传统农业贸易。
DECX (DUBAI E COMMODITY EXCHANGE LIMITED) is a new agriculture commodities exchange platform initiative for global buyers and sellers and the first of its kind in Dubai. The platform serves all market participants, including farmers, traders, processors, exporters and consumers.

迪亚那控股 / DIANA HOLDING

7.2C5-04(01)

Address: 摩洛哥 梅克内斯-ait harzallah, zniber 地产行政机构 Morocco Meknès-Bureaux administratifs domaine zniber ait harzallah
Tel: 010-83919042
Email: gaoge@norinco.cn
Web:

公司有60年的历史，是摩洛哥第七大的私有企业。我们的主要领域：1.农业贸易 2.家禽及鱼罐头 3.红酒及烈酒 4.软饮 5.服务业。是摩洛哥国家最大的红酒生产商，有3000公顷土地；同样是最大的烈酒进口企业。创立摩洛哥第一个原产地控制红酒“阿特拉斯山”，以及第一个摩洛哥酒庄“罗斯朗城堡”。1200公顷水果种植。我们是摩洛哥最大的去皮沙丁鱼排生产商，95%产品出口至美国。
We have more than 60 years of existence, we are the seventh largest private group in Morocco. Our MAIN activities: 1. Agro Business 2. Poultry and Fish cans 3. Wine and Spirit 4. Soft Drinks 5. Services. We are one of the biggest Fillet of sardine without skin producers in Morocco . We export 95% of our production to US.

泰国橡胶管理局 / Rubber Authority of Thailand

7.2C5-04(05)

Address: 泰国 Thailand Bangkok-65/25 Bangkhunnon Rd., Bangkok-noi
Tel: 010-83918921
Email: Zhwei@norinco.cn
Web: www.rubber.co.th

泰国橡胶管理局（RAOT）由三个单位整合而成，包括橡胶种植援助基金办公室，橡胶地产组织和橡胶研究所。泰国橡胶管理局法案是。2015年7月14日在政府公报中公布，并 于2015年7月15日生效。泰国橡胶管理局（RAOT）由泰国橡胶管理局委员会管理，泰国橡胶管理局局长拥有最高权力。
The Rubber Authority of Thailand (RAOT) was emerged from an integration of three units, comprising of the Office of the Rubber Replanting Aid Fund, Rubber Estate Organization, and Rubber Research institute.The Rubber Authority of Thailand (RAOT) is managed by the Committee of the Rubber Authority of Thailand, with the Governor of the Rubber Authority of Thailand having the highest authority.

红农场公司 / LA FERME ROUGE

7.2C5-04(02)

Address: 摩洛哥 拉巴特-罗马尼大区-KM 60 Had Brachoua Morocco Rabat-Rommani-Route Rabat-Rommani, KM 60 Had Brachoua
Tel: 010-83919042
Email: gaoge@norinco.cn
Web:

红农场公司创立于1908年，主要经营领域为葡萄树和橄榄树种植。作为一个家族企业，红农场公司目前有超过300公顷土地，2019年年产量为350万瓶红酒。葡萄种植区坐落于罗马尼山谷，距离大西洋45公里，海拔高度450米。我们的红酒在摩洛哥王国销售也用于出口，出口国家为美国、法国、比利时、瑞士以及撒哈拉以南非洲地区。我们于2018年开始橄榄油初榨。红农场公司团队第一次来中国是2018年首届进口博览会。
Created in 1908 La Ferme Rouge is an agricultural domain dedicated to the cultivation of the vineyard and the olive tree. Flourishing family business La Ferme Rouge is close to 300 hectares and will produce up to 3.5 million bottles in 2019. The vineyard is located in the valley of Romanie 45 km from the Atlantic Ocean, 450m above sea level.

巴基斯坦嘉发集团 / Jaffer Brothers Pvt. Ltd.

7.2C5-04(07)

Address: 巴基斯坦 旁遮普省-拉合尔-8-S 古尔曼妮路，古尔博二区 Pakistan Punjab-Lahore-8-S Mushtaq Ahmed Gurmani Road, Gulberg II
Tel: 010-68137641
Email: Liyx@norinco-intl.com
Web:

巴基斯坦嘉发集团，为集农业、工程、施工设备、贸易、和咨询为一体的多元化私营企业。公司成立于1948年，在阿富汗喀布尔有分公司，并于2012年设立了中国办事处。2017年公司年销售收入5亿美元(其中将近一半来源于农业相关的业务)。主营业务为农业、工程项目和机械设备。
Jaffer Brothers (Pvt.) Limited was incorporated in Karachi on July 2, 1948. The goods and services provided by JBL and the associated companies have led to improved productivity in the agricultural sector, information and communication technology field, as well as the construction and mining, transportation, telecommunication, power generation and distribution, environment and sanitation sectors.

阿海麦德纳胡森哈森进出口公司 / Ahemed Nurhusin Hasen Import & Export

7.2C5-04(09)

Address: 埃塞俄比亚 亚的斯亚贝巴-01 KIRKOS Ethiopia ADDIS ABABA-01 KIRKOS
Tel: 010-83918799
Email: Xiaoxin@norinco.cn
Web:

Ahemed Nurhusin Hasen Import & Export是埃塞俄比亚最大的进出口企业之一，也是埃塞进出口协会主要成员公司，出口产品主要是农产品，包括芝麻、花生等，并配套建立了完善的生产、加工、仓储、运输设施；进口产品主要包括建材、设备等，在中国拥有长期合作的供应商，目前该公司每年营业额超过3亿美元，已建立成熟的业务链条。尤其在农产品，该公司实力雄厚，中国已成为其重点开拓的农产品出口市场。
Ahemed Nurhusin Hasen is one of the largest import and export companies in Ethiopia. It is also a major member of the Ethiopian Import and Export Association. Its export products are mainly agricultural products, including sesame seeds, peanuts, etc., and it has established a complete production, processing, warehousing and transportation facilities.

吉亚德集团 / GIAD Industrial Group

7.2C5-04(12)

Address: 苏丹 喀土穆 Sudan Khartoum
Tel: 010-83918799
Email: Xiaoxin@norinco.cn
Web:

GIAD工业集团成立于1993年。GIAD工业集团着眼于苏丹工业的本地化发展和产业转型升级，旨在通过建立优质的经济项目、建设拥有高质量人才的国营强企，引领苏丹国民工业和制造技术的复苏。
The Group was established in 1993, aiming at achieving a comprehensive industrial and technological growth all over the Sudan, looking forward to leading the industrial revival in the whole region; through the transfer and localization of industries and establishment of projects, targeting the expansion of the national economy, based on efforts of its competent and qualified human resources.

PT. PANDU ARJUNA INDONESIA

7.2C5-04(15)

Address: 印度尼西亚 Indonesia Jakarta Selatan-Centerflix Boutique Office & Virtual Suites Jl. Danau Toba No.104 Kel. Bendungan Hilir Kec. Tanah Abang, Jakarta Pusat 10210
Tel: 010-83918921
Email: Zhwei@norinco.cn
Web: www.apindo.or.id/

PT.PANDU ARJUNA INDONESIA是印度尼西亚企业家协会所属单位，主要业务为农产品和化工衍生品的进出口贸易。APINDO受政府委托，联系印尼本国各类企业，协调企业家和雇员间的合作，并积极参与建立社会福利，以实现国家发展，特别是经济发展。该组织下属若干成员企业。本次展会主要该协会主要代表所属农业、经济作物领域的企业参展。
PT.PANDU ARJUNA INDONESIA is a member company of Asosiasi Pengusaha Indonesia (APINDO). Its main business is the import and export trade of agricultural products and chemical derivatives.APINDO is underlying the gov,and participating in the establishment of social welfare in the business community through integrated cooperation between the Government.

格鲁巴斯有限公司 / Globus Co., Ltd.

7.2C5-04(10)

Address: 苏丹 喀土穆 Sudan Khartoum
Tel: 010-83918799
Email: Xiaoxin@norinco.cn
Web:

Globus Co., Ltd公司是苏丹最大的进出口企业之一，自身拥有较为完善的仓储及物流体系，在当地具备强有力的竞争实力。公司目前具备10万平米的仓储能力，其中港口4万5千平米，喀土穆1万2千平米，农产品主产区近5万平米。公司主要聚焦于工业制成品的进口以及当地农产品的出口,目前年营业额超过2.5亿美元。公司正致力于成为芝麻、花生等农产品对华出口的领军者。
Globus Co., Ltd. is one of the largest import and export companies in Sudan. It has a relatively complete warehousing and logistics system and has strong competitive strength in the local area. It currently has a storage capacity of 100,000 square meters, including 45,000 square meters in port, 12,000 square meters in Khartoum, and nearly 50,000 square meters in main agricultural product area.

乌干达国营公司 / National Enterprise Corporation

7.2C5-04(13)

Address: 乌干达 坎帕拉-Plot 2, MUWESI ROAD, P.O. Box 3145 Uganda Kampala-Plot 2, MUWESI ROAD, P.O. Box 3145
Tel: 010-83918799
Email: Xiaoxin@norinco.cn
Web:

乌干达国家企业公司(NEC)依托于1989年通过的国家议会法案成立，作为乌干达国防部和人民国防军下属商业部门，为乌干达国防军和社会民众提供商品和服务。公司旗下拥有数家子公司和合资企业。To be a sustainable commercial arm of the Uganda Defence Forces that generates goods and services for progressive social, economic transformation and development amongst the Defence Forces,Veterans and Civil Society.

缅甸经济控股股份有限公司 / Myanmar Economic Holdings Pubilic Company Limited

7.2C5-04(16)

Address: 缅甸 仰光-博德堂区-摩珂班杜拉路189/191号 Myanmar Yangon-Botataung-No.189/191,Mahabandolla Road
Tel: 010-83918921
Email: Zhwei@norinco.cn
Web:

"缅甸经济控股股份有限公司成立于1990年，是提高缅甸国内生产总值的重要角色。MEHL的焦点和战略是投资促进经济增长的三个领域 —— 贸易、服务和制造业。这些领域是国家发展的核心，符合MEHL发展经济和改善公民福利的目标。
"Established since 1990, Myanma Economic holdings public company limited (MEHL) has played a key role in improving the Gross Domestic Product of Myanmar.MEHL's primary focus and strategy is investing in companies that are engaged in 3 distinct growth sectors of the economy - Trading, Services and Manufacturing.

南绿洲公司 / South Oasis Company Limited

7.2C5-04(11)

Address: 南苏丹 朱巴-Newsite, Bilpam Road South Sudan Juba-Newsite, Bilpam Road
Tel: 010-83918799
Email: Xiaoxin@norinco.cn
Web:

南苏丹南绿洲有限公司(South Oasis Company Limited简称“SOCO”)是一家南苏丹当地注册的综合性合资企业，位于南苏丹首都朱巴，在当地经营建筑工程、车辆维修、民爆、太阳能、商品和原材料的进出口业务。
South Oasis Company Limited (SOCO) is a Joint Venture which is locally registered in 2014. The headquarters of SOCO is in Juba, South Sudan. The company looks forward to promoting the cooperation between China and South Sudan in trading market, and to help the economic recovery of South Sudan after years of domestic conflict.

赞比亚国民服务队 / Zambia National Service

7.2C5-04(14)

Address: 赞比亚 卢萨卡 Zambia Lusaka
Tel: 010-83918799
Email: Xiaoxin@norinco.cn
Web:

赞比亚国民服务队的任务是培训公民为共和国服务，发展基础设施和加强国家粮食安全，并为社会经济发展作出贡献。国民服务队曾作为联合国中非稳定特派团维和部队成员参与到中非共和国的维和行动。为加强粮食安全生产了许多产品，包括农产品到制造业产品。农产品包括大豆，小麦，玉米和水果。
The Zambia National Service is a defence wing that is mandated to train citizens to serve the republic, develop infrastructure and enhance national food security and contribute to the social economic development. Zambia National Service (ZNS) personnel have been included in peacekeeping contingents deployed by Zambia.

巴拉尼开心果公司 / Barani Pistachio

7.2C5-04(17)

Address: 伊朗 德黑兰省-德黑兰市-萨阿达特阿巴德区，达利雅街191号 Iran Tehran-Tehran-No.191,Darya St.,Saadat Abad District
Tel: 010-83918734
Email: Wuxp@norinco.cn
Web:

Barani开心果公司成立于1988年，是伊朗第一家生产有机开心果的企业。公司的开心果庄园位于首都德黑兰-萨维，占地面积约732公顷。Barani公司于2010年获得了德国Kiwa Bcs有机食品认证，目前公司每年可产出1,500吨开心果，其中的90%都销往欧洲。
Barani Pistachio Company, established in 1988, is the first company focusing on the planting of organic pistachio in Iran. The Barani orchard is located in 55km of Tehran – Saveh Expressway and covers an area of 732 hectares. Nowadays, Barani Pistachio can output around 1,500 ton organic pistachio and 90% of them are exported to Europe.

萨拉姆·鲁彦·罗斯托克公司/ Salam Rouyan Rastaak Co.,

7.2C5-04(18)

Address: 伊朗 法尔斯省-设拉子市-树立德设拉子街第16号街23号 Iran Fars-Shiraz-No.23,16th Alley,Sourideh Shirazi St.,Saadi Cinema Crossroad
Tel: 010-83918734
Email: Wuxp@norinco.cn
Web: www.azilorganic.com

作为主营有机农产品以及食品生产和加工的伊朗民营企业，萨拉姆·鲁彦·罗斯托克公司的产品广销中东以及欧洲的许多国家。公司拥有超过1000公顷的种植园林，能够长期稳定供应各种有机农产品和食品，例如各类干果以及食品油等。公司一直致力于开发新产品，能够满足客户的不同需要。每年萨拉姆·鲁彦·罗斯托克公司的各类产品出口都超过500吨。

As a well-known Irannian private company foucsing on the production and processing of organic agricultural food, Salam Rouyan Rastaak Co., has the most diverse production and its products have been exported to Middle East and European Countries. Every year Salam Rouyan Rastaak Co., can export more than 500 ton products.

塔尔万德藏红花公司 / Tarvand Saffron Co.,

7.2C5-04(19)

Address: 伊朗 德黑兰省-德黑兰市-莫阿哈里大街，欧拉蒙街18号 Iran Tehran-Tehran-No.18,Oraman St.，Moahari Ave
Tel: 010-83918734
Email: Wuxp@norinco.cn
Web: www.tarvandsaffron.com

Tarvand Saffron Ghaen公司成立于1962年，是伊朗主要从事藏红花产品销售的私人企业。每年Tarvand公司销售14吨的藏红花，其中7吨出口到世界各地。Tarvand公司与伊朗农业部在藏红花的研发上有紧密的合作，拥有从藏红花培育、产品研发到加工包装和销售的全产业链。

Tarvand Saffron Ghaen Co., established in 1962, is a well-known Iranian company focusing on the Saffron products. Tarvand have a very close cooperation with Ministry of Agriculture of Iran for improving the research and development of saffron cultivating in Qayen and also it has the whole process chain including cultivation, research and development, processing, packing and distribution.

OZMO DISTRIBUTION LOGISTIC

7.2C5-05(01)

Address: 塞尔维亚 Serbia 11000-Belgrade-Admirala Vukovica bb
Tel: +381 63201 399
Email: nebojsa.terzic@mail.ru
Web:

Company Ozmo distribution logistic is export-import company.

BAHUS

7.2C5-05(05)

Address: 塞尔维亚 Serbia 3520-Paracin-Strisko naselje bb
Tel: +381 35 561 049
Email: office@naeks.co.rs
Web: www.naeks.co.rs

Bahus is a company from Serbia, which has been engaged in the production of refreshing carbonated and non-carbonated beverages for 25 years now. Our portfolio includes instant powder vitamin drinks, energy and functional drinks, refreshing fruit juice beverages with gifts for children.

FRUSKOGORSKI VINOGRADI

7.2C5-05(03)

Address: 塞尔维亚 Serbia 21312-Banostor-Dunavska 5
Tel: +381 21 661 35 00
Email: m.djuric@fruvin.com
Web: www.fruvin.com

The winemaking company Fruškogorski vinogradi possess 110ha of vineyards situated on the slopes of the Fruška Gora Mountain and have been nurturing the tradition of winemaking ever since 1947.Today,we produce four different series of wines and 14 labels: Fruška , Quet, Vieille Eglise and Tri sunca.

TOPLICKI VINOGRADI

7.2C5-05(04)

Address: 塞尔维亚 Serbia 18242-Prokuplje-Gojinovac bb
Tel: +381 63 400 855
Email: milan@toplickivinogradi.com
Web: www.toplickivinogradi.com

Toplicki Vinogradi Winery.-an area of 41 hectares is currently in production and is dedicated to Prokupac, the autochthonous vine to southern Serbia. Cabernet Sauvignon, Merlot, Pinot Noir, Chardonnay and Sauvignon Blanc are also grown.

DAMAR CONFIT

7.2C5-05(06)

Address: 塞尔维亚 Serbia 11000-Belgrade-Cerska 77
Tel: +381 65 8898 998
Email: Damarconfit@gmail.com
Web: www.damartartufi.com

Damar Confit is company which is dealing as fresh truffles as product based on truffles. Company was founded in 2014 with one goal, to present Serbian truffle with all positive characteristics. After 5 years we succeeded in our intentions and our assortment is exported to countries of EU, Russia and Asia.

DEN JURO ORGANIC

7.2C5-05(07)

Address: 塞尔维亚 Serbia 37220-Brus-Kneza Milosa 19a
Tel: +381 65 37 20 769
Email: mladen.djurovic@denjuro.co.rs
Web: www.denjuro.co.rs

Den Juro Organic is a company founded in 1985., specialized in producing and exporting organic fruits grown on the unpolluted and fertile farmland of the Southern Serbia. Our offer includes fruits as frozen, dried, fruit purees and fruit concentrates

ITN GROUP

7.2C5-05(08)

Address: 塞尔维亚 Serbia 11000-Belgrade-Autoput za Novi Sad 96
Tel: +381 31 3782999
Email: mirjana.nikolic@itn.rs
Web: www.itn.rs

ITN process and pack over 7,000 tons of different berries, primarily raspberries, sour cherry, blackberry, strawberry, plum, blueberry, forest fruit as well as vegetables : peas, sweet corn, green beans, etc. Quality standards: HACCP , ISO 9001/2008, BRC , IFS , SMETA,Kosher,Global Gap,Halal,Wal Mart.

PIP

7.2C5-05(09)

Address: 塞尔维亚 Serbia 21000-Novi Sad-Tekelijina 43
Tel: +381 21 423 330
Email: jk@tmex.rs
Web: www.tortilja.rs

PIP Novi Sad has been operating successfully since 1992. We have two modern and functional factories. At one plant we produce the mixes and improvers for baking industry, and in second we produce tortillas.

PODRUM DZERVIN 1927

7.2C5-05(11)

Address: 塞尔维亚 Serbia 19350-Knjazevac-Karadjordjeva 128
Tel: +381 19 731 120
Email: ivica.vukelic@autoritas.rs
Web: www.dzervin.rs

Within its premises "Dževrin" performs a primary production and consists of plantations with a total area of 239 hectares, out of which the sour cherry orchards occupy an area of 111 hectares, plum orchards an area of 88 hectares and vineyards an area of 40 hectares.

MAMBIKOM AGRAR

7.2C5-05(12)

Address: 塞尔维亚 Serbia 11000-Belgrade-Jurija Gagarina 154/7
Tel: +381 11 31 901 42
Email: mambikom@gmail.com
Web: www.mambikom.rs

The company Mambikom agrar is engaged in trading and production of fruits and vegetables. Our product range: IQF sour cherries pitted and unpitted, strawberries, raspberries, blackberries, plums halves (hand cut and machine cut) and quarters; dried plums/prunes.

MLEKARA SABAC

7.2C5-05(13)

Address: 塞尔维亚 Serbia 15000-Sabac-Krsmanovica bb
Tel: +381 15 303 011
Email: milica.jelic@mifinance.rs
Web: www.mlekara-sabac.rs

Mlekara Šabac is one of the largest milk producers in Serbia,with its capacity of milk receiving and processing of 260 000 litres per day. The product range consists of soft cheeses, cream cheeses, sterilized milk and fermented products.

Syngenta Crop Protection AG

7.2C5-06

Address: 瑞士 Switzerland Basel-Schwarzwaldallee 215
Tel: 010-65506848 / +86 10 6550 6848
Email: ashley.bai@syngenta.com
Web: www.syngenta.com

Syngenta is one of the world's leading agriculture companies. Our ambition is to help safely feed the world while taking care of the planet. We aim to improve the sustainability, quality and safety of agriculture with world-class science and innovative crop solutions. Our technologies enable millions of farmers around the world to make better use of limited agricultural resources.

慕森生物科技集团有限公司 / MONSAN BIOTECH GROUP LIMITED

7.2C6-01

Address: 香港地区 HongKong China Hong Kong-Kowloon-Good View Commercial Centre, 2-16 Garden Street, Mongkok
Tel: 021-54019539
Email: lb.liu@monsanworld.com
Web: www.monsanbio.com

慕森生物科技集团有限公司是一家跨国食品企业，以“天然食品赋能品质生活”为宗旨，服务亿万消费者享受健康品质生活。集团源自欧洲、亚太区总部位于香港地区，在大陆设品牌管理公司。在全球三大洲拥有众多品牌商品，MOVA、凍齡Frozen Age等日本原产品牌是针对亚洲女性群体的胶原蛋白类、酵素类产品；UNIEE德国原产品牌是针对运动健身人群的低脂酸奶蛋白棒代餐饼干等运动能量补充食品；FITFUN为澳洲原产品牌是健康代餐食品。

MONSAN Group is a multinational food enterprise, aiming at "Enabling Quality Life of Natural Food", serving hundreds of millions of consumers and promoting them to enjoy a healthy quality life better. MONSAN Group has established a brand management operation company and a joint venture company in Hong Kong.

株式会社 三洋产业 / Sanyo Sangyo Co., Ltd.

7.2C6-02

Address: 日本 别府市-大分县-富士见町7番2号 Japan Beppu-shi- Oita -7-2, Fujimicho,
Tel: 027-65029757
Email: shi.ruru8866@qq.com
Web: sanyo-sangyo.co.jp

我公司主要经营项目为咖啡滤纸、咖啡豆烘烤、调味料、私人品牌定制以及各种大分特产的贩卖。我公司是日本唯一一家咖啡周边产品的综合生产厂家。除商品的销售以外我们还可以进行商品促销方式的的话策划。

Our main business items are coffee filter paper, coffee bean roasting, seasoning, private brand customization and various specialty sales. Our company is the only comprehensive manufacturer of coffee peripheral products in Japan. In addition to the sale of goods, we can also carry out the promotion of goods planning.

UFON International Trading GmbH

7.2C6-03

Address: 德国 Germany Nordrhein-Westfalen-krefeld- Koenigstrasse 81-83,47798 Krefeld, Germany
Tel: 021-62683338
Email: Jameszhang@ufon-international.com
Web: www.ufon-international.com

Ufon International Trading GMBH located Krefeld city in Germany, focus on export the German Beer, red wine ,others high quanlity beer from all of world.

Chenshia Granary (Pty) Ltd

7.2C6-04

Address: 南非 South Africa Cape Town-42 Hans Strijdom Avenue- 2nd Floor, Aria Building
Tel: 0086 13020089174
Email: annasu@chenshia.com
Web: www.chenshiagranary.com

千谷食品专注于食品农产品领域的贸易,投资与服务。立足于中国与非洲之间的优势互补,将两地产品、技术、服务、资源进行优化配置和有机整合。旨在将尖端技术、创造性思维和特色文化融入农产品的生产和流通,为消费者提供健康安全的优质产品,为零售商提供便捷稳定的高附加值服务,为生产者提供更精准的市场导向,优化农产品供应链,助力美好生活。

Chenshia Granary (Pty) Ltd focuses on trade, investment and services in the field of food and agricultural products. It stands for the complementary advantages between China and Africa, and optimizes allocation and integration of products, technologies, services and resources.

Adisseo France S.A.S 法国安迪苏集团

7.2C6-06

Address: 法国 France Immeuble Antony Parc II 10, place General de Gaulle 92160 Antony France
Tel: 021-61696982
Email: lily.li@adisseo.com
Web: www.adisseo.com.cn

安迪苏是动物营养领域的理想合作伙伴。

Adisseo is one of the world's leading experts in feed additives.

"Ecoproduct Asia" LLC

7.2C6-05

Address: 吉尔吉斯斯坦 翠州-区少波克夫市-吉尔吉斯共和国，翠州，扫库鲁克区少波克夫市五月一街，26 A Kyrgyzstan Chui region-Shopokov Town, Sokuluk district-26 A, Pervomaiskaya Street, Shopokov Town, Sokuluk district, Chui region, Kyrgyz Republic
Tel: +996 707 30 00 03
Email: marketing@ecoproduct.kg
rahat.omurbekova@ecoproduct.kg
Web: www.ecoproduct.kg

Ecoproduct Asia有限责任公司是吉尔吉斯共和国最大的天然果汁、花蜜和果汁饮料生产商之一。 该公司的主要业务是加工水果、蔬菜和浆果，以及生产直接压榨100%天然果汁，花蜜和含果汁的饮料。该企业的生产能力为每年4万吨。该工厂配备了最先进的设备和4条Tetrapak n Voran装瓶生产线。使用HACCP体系。

"ECOPRODUCT ASIA" LLC Ecoproduct Asia LLC is one of the largest manufacturers of juices, nectars and drinks in Central Asia. Company processes fresh fruits, berries and vegetables from own orchards for production of direct pressed NFC juices. Besides BFC we produce juices, nectars and still drink. Production capacity of the plant is 40000 tons/year. Production is based in the Kyrgyz Republic.

ADAMA Agricultural Solutions Ltd.

7.2C6-07

Address: 以色列 Israel Israel Airport City -Airport City, Golan Street
Tel: +972-73-232-1332
Email: Oriella.BenZvi@adama.com
Web: www.adama.com

ADAMA is one of the world's leading crop protection companies. The company strives to Create Simplicity in Agriculture – offering farmers effective and efficient products and services that simplify their lives and help them grow. With one of the most comprehensive and diversified portfolios.

土耳其阿涑冰泉公司 / Turkish Assu Ice Springs Co., Ltd

7.2C6-09

Address: 土耳其 伊斯坦布尔-萨卡里亚-马尔马拉76号 Turkey Istanbul-Sakaria-Marara76
Tel: 15221993521
400-021-5187
Email: 1592362341@qq.com
Web: www.auiga.com

土耳其阿涑冰泉公司是一家对泉水具有高标准的公司，公司在生产、控制和分销方面具有很高的标准。公司把最好的泉水带给世界，选择直接从源头灌装，使用健康卫生的矿泉水瓶，以确保从泉水到客户手中的矿泉水质量最好，把最好的assu带给每一位消费者是阿涑的使命。

Assu Ice Springs Co., Ltd., located in Sakaria Province, Turkey, is a company with high standards for the quality of spring water. The company fills directly from the source, uses the healthy and hygienic mineral spring water bottle, brings the clean spring water to the world.

亚曼茶叶有限公司 / AHMAD TEA LIMITED

7.2C6-10

Address: 英国 United Kingdom London-Hampshire-Winchester Road, Chandlers Ford, Hampshire, SO53 2PZ
Tel: 0791-83670929 / 0791-83889995
Email: ydyuan@riantea.com kiki@ahmadtea.cn
Web: www.ahmadtea.cn
www,ahmadtea.com

亚曼茶，是一家总部位于英国伦敦4代传承的家族企业，世界前5大茶叶品牌。亚曼每年向全球6大洲80多个国家供应27000吨茶叶，以每杯2.5g计算，每天全球约有3000万人饮用一杯亚曼茶。

Ahmad Tea is a UK-based family business, drawing on four generations of tea blending and tasting experience. Founded on a passion for the finest tea, we are dedicated to the unique place that tea drinking commands at the heart of daily life in Britain and beyond.Ahmad Tea becomes a top 5 international tea brand and continues to grow across over 80 countries around the world.

B&G. S.r.l

7.2C6-11

Address: 意大利 Italy VIA DEL PIOMBO, 5 06134 PERUGIA ITALY
Tel: 86-021-62400626
Email: joylandxu@china-hansen.com
Web:

The company B&G was founded in Perugia by the Giammarioli family.Since1994 it has been producing and distributing high quality food products,well know in the market for their originality,usefulness and innovative image. LIMMI is the company's main brand,and also the name of its core business:lemon juice.

Dellos F&B Co., Ltd

7.2C6-12

Address: 韩国 ROK(Republic of Korea) Korea-Gangwon-Do-159,Usangongdan-gil, wonju-City
Tel: 82337315003
Email: info@dellosfnb.com
Web:

Dellos F&B Co., Ltd. manufactures and exports various kinds of fruit juice, and functional beverages based on accumulated experiences and technical capabilities.

Dellos F&B constructed a solid food distribution network in Western Europe, Oceania, Russia, Middle Asia, and Northern Africa based on specialization and reliability.

37WINE

7.2C6-13

Address: 新西兰 SAINT DENIS-bobigny-91-101 rue henri gautier New Zealand PARIS-PARIS-47 boulevard de sébastopol 75001 PARIS
Tel: +33156964803
Email: 37winecave@gmail.com
Web: www.37wine.com

37 wine we are the importer, the exporter, negociant, in wine distribution, sperieux and food product in France.

Shine Tea Holdings (Pvt) Ltd.

7.2C7-01

Address: 斯里兰卡 Sri Lanka NUGEGODA-PAGODA ROAD-NO.11A,1ST LANE,PAGODA ROAD,NUGEGODA
Tel: 021-50910287
Email: joyce.z@nauticalintl.com
Web:

RG蕾米花园-英式调味红茶系列，以锡兰红茶作为茶汤基地，加以新鲜花草，由斯里兰卡10年以上的资深调茶师，研发调制。其中，锡兰红茶又以最为知名的“乌瓦”作为原材料，从茶叶，口味调制，生产制作，由斯里兰卡当地完成。蕾米花园，为消费者尽可能的保留茶叶最醇正的口味。

RG Ramey's Garden - British flavored black tea series, with Ceylon black tea as tea soup base, To add fresh flowers and plants, by Sri Lanka more than 10 years of senior tea mixer, research and development of modulation. Among them, Ceylon black tea is the most famous "Oua" as raw materials, from tea, mouth.

Trade for joy

7.2C7-02(01)

Address: 哥伦比亚 Colombia Cundinamarca-Bogotá-Calle 37 16-52, Teusaquillo
Tel: 5712486777
Email: contacto@porkcolombia.co
Web: www.miporkcolombia.co
www.ciporkco.co

此公会代表本国猪肉生产者为期36年。我们在猪肉链的各个环节推动和配合技术化进程，促进国内的猪肉消费。透过我们不断努力向世界各国出口肉类与其副产品此公会代表本国猪肉生产者为期36年。我们在猪肉链的各个环节推动和配合技术化进程，促进国内的猪肉消费。透过我们不断努力向世界各国出口肉类与其副产品屠宰厂的屠宰基础设施以及屠宰厂的设计符合国家和国际标准。他们还拥有质量和安全认证（Haccp）。

The international trading company CIPORKCO is a Colombian company dedicated to products, offals, and derivatives (dfreli) of pork meat and other proteins in the international area.

It is owned by Colombian pork producers who have experience in production for more than 50 years, which allow us to offer products of the highest quality resultingfromtec.

THE COLOMBIAN FACTORY S.A.S

7.2C7-02(02)

Address: 哥伦比亚 Colombia DC -Bogota -Cl 95 No 71 45 Bloq 5
Tel: 0086 15050461238
Email: china.office@colombianfactory.com
Web: www.colombianfactory.com

in Colombian Factory, we represent and commercialize products 100% from Colombia. we promote Colombia and its resources as the place where many overseas buyers can find a reliable supplier with international quality standards.our main products are focus on health food such as:Quinoa derivate snacks and products Coffee (extract, bean) Colombian tea infusions (exotic fruit + sugar cane).

DISTRIWAI SAS

7.2C7-02(03)

Address: 哥伦比亚 Colombia ANTIOQUIA-SABANETA-CARRERA 48 # 52 SUR - 177 BODEGA 111
Tel: 444 40 44
Email: oscar.giraldo@waidrinks.com
Ceo@tiveter.com
Web: www.tiveter.com

distribution of functional and healthy drinks Production and distribution of functional and healthy drinks

Industria Colombiana de Café

7.2C7-02(04)

Address: 哥伦比亚 Colombia Antioquia-Medellín-Carrera 50 Sur # 6 Sur – 81
Tel: (574) 285 66 00 Ext
Email: gepalacio@colcafe.com.co
Web: www.colcafe.com

Colcafé, is a Colombian company part of the “Grupo Nutresa" Food Group, " specialized in processing and marketing coffee and related products. Our production is focused on the categories of Roast and Ground Coffee, Freeze Dried, Granulated and Powder Coffee; Coffee Mixes such as Cappuccinos, 3 in 1 and Coffee Creamers.

SilicaTrading

7.2C7-02(05)

Address: 哥伦比亚 Colombia Cundinamarca-Bogotá-Carrera 5 #60A 55
Tel: +5713587856
Email: diego.tangarife@silica.com.co
Web: silica.com.co

As part of a complex and global economy, SILICA TRADING facilitates the promotion and trading of products and services in different markets worldwide, mainly in the agro-industrial sector. We guarantee the efficiency and compliance of merchandise acquisition and sell between exporting Colombian suppliers and international markets.

BASAL CONSULTORES INT SAS

7.2C7-02(07)

Address: 哥伦比亚 TOLIMA-IBAGUE-CRA 9 N 79 -00 AP 802 TO 23 Colombia TOLIMA-IBAGUE-CRA 9 N 79 -00 AP 802 TO 23 CONJ BOSQUE LARGO
Tel: 86 020-81289881 / 57 3185777458
Email: director@basaltradinghk.cn
Web: www.basaltrading.com

Basal Trading is a legally constituted company in Colombia & China, since 2010, with financial and intellectual 100% Colombian capital, that has developed a physical and digital platform of services and international businesses, which executes, structures, facilitates and promotes import and export projects and foreign direct investment , to connect the chinese market with Latin America.

Colombian Trading Co

7.2C7-02(08)

Address: 哥伦比亚 Colombia Cundinamarca-Bogota-Cra 7a No. 113 43 piso 4
Tel: 57 3203258376
Email: jorgehernandorodriguez@hotmail.com
Web: drinkers.co/en

We are a family of creators - close knit and a little crazy - handcrafting goods at our workshop. We make beautiful products from quality materials because we believe each one is a representation of who we are.

Linen Traders Corp

7.2C7-02(09)

Address: 哥伦比亚 Colombia Florida-Davie-11560 SW 20 ST
Tel: 1 7865543882
Email: gcanola@linentc.com
Web: www.linentc.com

LTC CORP is dedicated to develop and forging lasting partnerships with our brands to help launch and commercialize new products, conventional and specialty retail channels. Our team is made up of experienced individuals with a passion for developing and deep relationships with local and international retailers and distributors.

哥伦比亚博恩冻干速溶咖啡 / Buencafé Liofilizado de Colombia

7.2C7-02(10)

Address: 哥伦比亚 Colombia Caldas-Chinchiná-Carrera 4 No. 16-50
Tel: +86 (021) 52980700
Email: wjh@cafedecolombia.cn
Web: www.buencafe.com

作为哥伦比亚国家咖啡生产者协会（FNC）的一员，博恩咖啡工厂Buencafé诞生于1973年，是全球优质速溶咖啡的领先供应商之一，也是唯一一家拥有明确社会导向的供应商。Buencafé目前是哥伦比亚国内唯一一家冻干咖啡工厂，也是世界上技术最先进、规模最大的咖啡厂之一。

As part of the Colombian Coffee Growers Federation (FNC), Buencafé was created in 1973, and it is one of the leading premium soluble coffee suppliers in the world and the only one with a social orientation. Buencafé is currently the only freeze-dried coffee factory in Colombia and one of the most technologically advanced and largest coffee factories in the world.

Akbar Brothers (Pvt) Ltd

7.2C7-04

Address: 斯里兰卡 Sri Lanka COLOMBO 10-No.334 T.B. JAYAH MAWATHA
Tel: +94 (0) 11 2697151
Email: haji@akbar.com
Web: www.akbar.com

Akbar Brothers is the largest exporter of Ceylon tea, and Akbar Tea is renowned and enjoyed in more than eighty countries worldwide.

CEYLON TEA MARKETING (PVT) LIMITED

7.2C7-05

Address: 斯里兰卡 Sri Lanka WESTERN-WELLAMPITIYA, -NO. 63/7, SEDAWATTE ROAD, KOHILAWATTE
Tel: +94 11 2076230 - 35
Email: ctm@ctmtea.com
Web: www.ctmteagroup.com

Ceylon Tea Marketing (Pvt) Limited, known as CTM globally was established in 1980 and is a leading Tea export company in Sri Lanka.

DEVON TEAS LIMITED

7.2C7-06

Address: 斯里兰卡 Sri Lanka Western -Colombo-No: 82, Stratford Avenue. Colombo 06
Tel: +94112553436
Email: pradeep@deavontea.com
Web: www.deavontea.com

Deavon tea, the modern beverage brand is linking the Sri Lankan origins of Tea and Cricket, which both are gifted by England during the colonial time. Whilst cricket creates the passion, tea creates the unique blend of taste to provide complete wine down. Deavon is the only beverage brand in Sri Lanka, truly making these unique combinations together to indulge consumers' world over.

EURO ASIA CORPORATION (PVT) LTD

7.2C7-07

Address: 斯里兰卡 Sri Lanka WESTERN-COLOMBO-NO: 286D, MULLERIYAWA NORTH, MULLERIYAWA
Tel: 0094112417748
Email: udari@euroasiatea.com
Web: www.euroasiatea.com

Euro Asia Corporation (Pvt) Ltd which is a well established premier tea trading company in Sri Lanka exporting the finest quality Ceylon Tea since 2005.It is a registered tea exporting company with the Sri Lanka Tea Board, a member of the Colombo Tea Traders Association (CTTA), a member of Tea Exporters Association of Sri Lanka (TEA) and a member of National Chamber of Exporters' of Sri Lanka.

HERO NATURE PRODUCTS (PVT) LTD

7.2C7-08

Address: 斯里兰卡 Sri Lanka Other-DANKOTUWA-NO 49 INDUSTRIAL ESTATE DANKOTUWA SRI LANKA
Tel: 0094312265200
Email: natures@herozip.com
Web: www.heronature.com

Hero Nature Products Pvt Ltd is a leading manufacturer & Exporter of Organic Coconut Products. Its major products are Virgin Coconut Oil, Coconut Flour, Desiccated Coconut & Coconut Chips. Our products certified with BRC, ISO 22000, ISO 14001;2004 and ISO OHSAS 18001;2007 certifications.

Lions Management (pvt) Ltd.

7.2C7-10

Address: 斯里兰卡 Sri Lanka Southern Province-Beralapanathara-Ketawala road, Kekundeniya
Tel: +94777713460
Email: info@lionstea.lk
Web: www.lionstea.lk

Lions Tea is an unique un-blended tea comes to you directly from our tea factory, located in a scenic environment bordering to the world famous "Sinharaja" rain forest in Ruhuna region of the tropical pearl; Ceylon.The Lions range includes pure black tea, flavored tea, specialty teas, tea bags and many more to delight the most discerning connoisseurs of Pure Ceylon Tea throughout the world.

Mabroc Teas (Pvt) Ltd

7.2C7-11

Address: 斯里兰卡 Sri Lanka Western-Kiribathgoda-57/3, New Hunupitiya Road
Tel: +94117878000
Email: lankesh@mabrocteas.com
Web:

Mabroc Teas (Pvt) Ltd is one of the largest Ceylon Tea exporting company in Sri Lanka, currently shipping to 57 Countries. We are the 2nd largest tea exporter to China.We provide packages in both Bulk and Value Added, also, we do private labeling.
We are also a FSSC certified company which we ensure the safety of the products we pack.

REGENCY TEAS (PVT) LTD

7.2C7-12

Address: 斯里兰卡 Sri Lanka Kelaniya-359, Biyagama Road,
Tel: +94114713518
Email: regencyt@regencyteas.com
Web: www.regencyteas.com

The wide range of teas under the Hyleys portfolio includes; traditional and classic black & green tea as well as specialty blends with flavours, additives and herbs. Hyleys recently launched high end packaged products consisting of best Ceylon teas and 100% natural ingredients in stride with latest global consumer trends.

sinolan Tea pvt ltd

7.2C7-13

Address: 斯里兰卡 Sri Lanka Western province-Colombo-24. Swarnadisi Place, Koswatte Road, Nawala, Rajagiriya
Tel: +94 76 7774031
Email: wawa.senlan@gmail.com
Web: www.sinolantea.lk

Established by ambitious and innovative team, offers purely unique flavours of Ceylon Tea with equally stunning packaging to match. Sinolan tea, grown on several elevations, hails from a selection of world famous regions in Sri Lanka such as Uva, Ruhuna, Kandy, Nuwara Eliya, Dimbula, Sabaragamuwa and Uda-Pussallawa.

TeaTalk

7.2C7-14

Address: 斯里兰卡 Sri Lanka western-Pannipitiya-364/1, Arawwala Road,
Tel: 020-34003799 / +94112845544
Email: cindyng@teatalkllk.cn
chamara@teatalk.lk
Web: www.teatalk.lk

广州茶话商贸有限公司是TEA TALK锡兰红茶中国代理。TEA TALK在斯里兰卡荣获茶叶局颁发两星茶叶品牌，同时是斯里兰卡-中国商务理事会锡兰商会成员。TEA TALK在斯里兰卡拥有近百亩茶园，自由茶叶加工厂，严格把控生产环节，确保给您提供最好的产品。TEA TALK可做预包装产品、OEM产品、礼品定制等。

TeaTalk teas are more than the leaves of Camelia sinensis. A Celebration of the 'Ceylon Tea' legacy, each sip of our tea assures supreme quality and taste, which speaks for its freshness preserved from the Garden to the Cup. While the state of the art Technology is our strength best practices are our pride. Indulge in TeaTalk-Pure Ceylon Tea, where the wonder of an Island brews in a cup.

Tradlanka Agricultural Enterprises (Pvt) Limited

7.2C7-15

Address: 斯里兰卡 Sri Lanka Colombo 03-87 1/2, St. Anthony's Mawatha,
Tel: +94112716580 / +94112761999
Email: prasad@ariyafood.com
Web: www.ariyafood.com

Tradlanka Agricultural Enterprises (Pvt) Ltd is a company that manufactures and market highest quality Sri Lankan Red Rice, White Rice, Ceylon Cinnamon, Spices, Chutneys, Pickles and Coconut Vinegar, Virgin Coconut Oil, White Coconut Oil and Desiccated Coconut, Coconut Milk, Coconut Jaggery, Coconut Treacle, Cashew Nuts, Wellness Teas under the ARIYA Brand.

World Mart Ceylon (Pvt) Ltd

7.2C7-16

Address: 斯里兰卡 Sri Lank Kurunegala-1050, Rathkarawwa, Maspotha
Tel: +94114328368
Email: yashoda@worldmartceylon.lk
info@worldmartceylon.lk
Web: www.worldmartceylon.lk

World Mart Ceylon (Pvt) Ltd (WMC) is a subsidiary of Roof Mart (Pvt) Ltd group. We are a leading Sri Lankan export company of tea, cashew, spice, coconut oil, dry fruits, and etc. under the brand name 'HILTIPS'. The Company was launched in 2015 and is led by experienced trade professionals.

欧陆科技集团 / Eurofins Scientific, Inc.

8.1A0-01

Address: 美国 United States of America IA-Des Moines-2200 Rittenhouse Street
Tel: +86 400 828 5088
Email: info@eurofins.cn
Web: www.eurofins.com

欧陆科技集团是一家国际领先的实验室分析集团，为食品及动物饲料、药品、环境和消费品领域、以及多国政府机构提供广泛的检测和技术支持服务。目前，作为全球分析服务领域的领导者，欧陆分析在全球六个大洲拥有分布于47个国家超过800家实验室组成的国际合作关系网，超过4.5万名员工，多达20万种可靠有效的分析方法，每年进行超过1亿次分析检测。

With more than 45,000 staff across 800 sites in 47 countries, Eurofins Scientific is a leading international group of laboratories providing an unparalleled range of testing and support services to the food/feed, pharmaceutical, environmental and consumer products industries and to governments.

NOREVO GmbH

8.1A0-02

Address: 德国 Germany Hamburg-Hamburg-Völckersstraße 14-20, 22765 Hamburg
Tel: 010-88696560
Email: info@norevo.cn
Web: www.norevo.cn

Norevo GmbH is an internationally established supplier of natural raw materials and a producer of specialty ingredients for applications in the food, confectionery, beverage industries, the pharma and cosmetic sectors as well as technical applications. From natural raw materials such as gum arabic, agar agar, honey, agave syrup, licorice extract and waxes, to tailor-made qualities.

Marfrig Global Food S.A. 玛芙

8.1A1-01(02)

Address: 巴西 Brazil Sao Paulo-Itupeva-Rua Prefeito Jose Carlos 750, Jardim Santa Julia
Tel: +86 15601990719
Email: marino.camardelli@marfrig.com
Web: www.marfrig.com.br/en

Marfrig is one of the world's leading beef producers, with 22 primary processing units, 12 further processing units and eight distribution centers spread across Brazil, Argentina, Uruguay, Chile and the United States. Our products, reach nearly 100 countries every day, and are recognized worldwide for their premium quality.

Minerva Foods 美利华

8.1A1-01(03)

Address: 巴西 Brazil Sao Paulo-Barretos-Antonio Manco Bernardes Avenue, no number, Chacara Minerva
Tel: +55 17 33213355
Email: export@minervafoods.com
Web: www.minervafoods.com

Minerva Foods is one of the South American leaders in the production and sale of fresh beef and its byproducts, as well as operations in meat processing. The Company owns 25 slaughterhouse and deboning plants, 3 processing units, 14 distribution centers and 14 international offices. All the assets in Argentina, Chile, Colombia, Paraguay and Uruguay constitute Athena Foods, a Chilean subsidiary.

China Brasil Investimento Desenvolvimento Comercial Ltda.

8.1A1-01(04)

Address: 巴西 Brazil SP-Sao Paulo-Rua Pamplona 518, 2º andar
Tel: +551135040988
Email: panfaming@me.com
Web: www.chinatradecenter.com.br

Founded in 2002, operates in trade relations development between Brazil and China. Promotes economic, technological and cultural exchange through national and Intl. exhibitions organization and representation. Specialist in organizing business and government itineraries for world trade fairs. Also provides import and export, customs clearance, product, suppliers and logistics prospecting service.

Sabor das Indias / Sabor das Índias

8.1A1-01(05)

Address: 巴西 Sao Paulo-Vinhedo-Rua Manoel da Sa Fortes Junqueira Jr. 477, Joao XXIII Brazil São Paulo-Vinhedo-Manoel da Sa Fortes Junqueira Jr Street. 477, João XXIII code zip 13283-044
Tel: +55 19 38362183
Email: gustavo@sabordasindias.com.br
Web: www.sabordasindias,com.br
www.sabordasindias.com.br

Founded in 1994 in Vinhedo, Brazil. We are pioneers in the manufacture of gourmet products, based on red peppers in Brazil, always bringing the taste of home-made food to our customer, the quality and excellence from acquisition of the raw material to the final customer. Our diferencial, it's mixture in our products of exotic peppers and fruits from Brazil and the world, making them special.

孚果工坊 / Fugo

8.1A1-01(06)

Address: 巴西 圣保罗-圣保罗-Rua Caramuru 526, Diadema Brazil Sao Paulo-Sao Paulo-Rua Caramuru 526, Diadema
Tel: +55 11 40434144
Email: import@continentalparafusos.com.br
Web: www.fugobrazil.com

Fugo提供巴西南美一站式采购！Fugo是一个集整、出口巴西知名快速消费品的集货商和出口商。Fugo可以直接提供各种品牌和产品，客户面向国外超级市场，食品经销商，精品超市，贸易商，食物生产商和线上电子平台。Fugo为您提供优质服务，解您所需，精于规划，帮助您更有效的利润最大化。Fugo给供应商在合适的市场提供最新的知识，帮助消费者理解使用或食用订购产品。我们工作快速高效，可用普通语或葡语。

We are a Brazilian based consolidator, exporter & marketer of South America Fast Moving Consumer Goods (FMCG) products. We directly supplies the Brazilian brand with variety products to overseas' supermarkets, food service distributors, premium stores, traders, food producers & e-commerce platforms. We provides you with outstanding service and understands your requirements.

Novo Mel Biotecnologia e Analises Laboratoriais Ltda. 诺维利工业及外贸有限公司

8.1A1-01(07)

Address: 巴西 Brazil Sao Paulo-Cotia-Matrix Street 120b, Moinho Verlho
Tel: +55 11 37215693
Email: 939460904@qq.com
Web: www.novomel.com.br

巴西有20多年历史的蜂产品企业，主产巴西绿蜂胶和雨林蜂蜜，产品遍布巴西各大商超和药店，产品出口到美国，加拿大，墨西哥，中东和亚洲地区。

Brazil has more than 20 years of history of bee products, mainly producing Brazilian green propolis and rainforest honey. The products are distributed in Brazil's major supermarkets and pharmacies, and the products are exported to the United States, Canada, Mexico, the Middle East and Asia.

Industria de Produtos Alimenticios Cory Ltda.

8.1A1-01(08)

Address: 巴西 Brazil Sao Paulo-Ribeirao Preto-Antonio Fernandes Figueiroa ST. NRO. 1056, Lagoinha
Tel: +55 16 30243342
Email: arthur@millen.com.br
Web: www.cory.com.br

Traditional industry in Brazil, with 51 years old, Cory is a company worry with costumers and consumers. Have 2 factories and recognized brands like HIPOPO, ICEKISS, AZEDINHA, LILITH. Produce sweets and biscuits, with high international presence in 44 countries.

OSBORNE DISTRIBUIDORA, S.A.

8.1A1-02

Address: 西班牙 Spain SALVATIERRA, 6. Polígono Industrial Fuencarral, 28034 - MADRID
Tel: 63055019
Email: suellen.sun@osborne.cn
Web: www.osborne.es

敖司堡集团拥有近250年的历史，我们立足于西班牙，以丰富的经验，用心制造，为全世界的消费者带来最为地道和精美的西班牙特色酒类及美食。旗下拥有21个烈酒品牌，3个葡萄酒/雪利酒酒庄，Cinco Jotas 5J奢华食品及餐饮，11家餐厅，产品出口至60个国家及地区。

A Spanish company with more than two centuries of experience selecting, handcrafting and commercialising wines and gourmet food; delivering authentic and prestigious brands to consumers all over the world.We own 21 brands of Spirits, 3 wineries, Cinco Jotas 5J premium food and restaurants, export to more than 60 countries around the world.

澳大利亚天然生物科技有限公司 / Australian Natural Biotechnology Pty Ltd

8.1A1-03

Address: 澳大利亚 Australia Western Australia-Perth-241 Stirling Street, Perth WA 6000
Tel: 18616605188
Email: 1243718166@qq.com
Web: www.naturalbiotech.com.au

澳大利亚天然生物科技有限公司(简称ANB)，是澳大利亚较早致力于以纯天然蜂业为主、保健品及护肤品为辅，研发、生产、销售一体化的综合性公司，总部设在西澳首府Perth。2000年实现重组，下携具有百年历史的养蜂家族及Karibee品牌，Evernature以及pureblue等子公司；ANB拥有超凡的技术科研团队,5位技术核心科学家同时也是农业、食品、营养、医学、微生物领域的权威专家。

Australian Natural Biotechnology Co., Ltd. (ANB) is an integrated company that is committed to integrating research, development, production and sales with pure natural bee industry, health products and skin care products. Restructured in 2000, with a century-old beekeeping family and Karibee brand, Evernature and pureblue and other.

EMBUTIDOS Y JAMONES ESPANA E HIJOS, S.A.

8.1A1-04

Address: 西班牙 Spain Spain-Escalonilla (Toledo)-Ctra Torrijos a Puebla de Montalban Km 9,100
Tel: 62118625
Email: yj402@china-hansen.com
Web:

Jamonbrand 'the Shadow of Oaks' has entered the Chinese market over six years since 2013. We have two factories in Spanish legal jamon-producing regions which are located in Salamanca and Extremadura area.

古立企业有限公司 / Guli Enterprise Co., Ltd.

8.1A1-05

Address: 台湾地区 台灣-桃园市-龟山区文二一街16号9楼之2 Taiwan China-Taoyuan -9F.-2, No. 16, Wen 21st St., Guishan Dist.,
Tel: 15715949189
Email: judy@guli.com.tw
Web: www.guli.com.tw

本公司秉持服务、质量、效率与分享精神，以生技与生活为主轴,结合台湾少数民族文化与特有生产品，开创未来的发展空间及提升竞争力，提供客户Total Solution与One-stop shopping的专业服务，协助客户加速Tome to Market将产品推向国际舞台，打造【爱、分享、幸福】的企业。

Gu Li Enterprise sincerely provides perfect services for all customers. It is our goal to achieve customer needs. It is the tenet of the company to improve service quality and quantity and integrate multiple service functions.

大友食品实业有限公司 / TA YU FOOD ENT.CO., LTD.

8.1A1-06

Address: 台湾地区 台中市太平区永平路二段476巷66弄20号 Taiwan China, NO.19, ALLEY 66, LANE 476, SEC 2, YEONG PYNG RD, TAY PYNG DISTRICT, TAICHUNG 41144
Tel: 04-22703556
Email: 110197247@qq.com
Web:

傳承美味、用心烘焙的大友食品，自1955年創業以來，在台灣糕餅業屹立已經六十年了。多年來，大友食品始終堅持產品的推陳出新、更堅持對品質的嚴格要求。由於一貫的堅持，並以最好的原料用心烘焙。所以，大友食品的產品廣受消費大眾的喜愛、產品更行銷海內外多個國家。

It has been sixty years since it was founded in 1955 to inherit delicious and carefully baked Dayou Food. Over the years, Dayou Food has consistently adhered to the promotion of products from the old to the new, but also adhered to the strict quality requirements. Because of consistency, and with the best raw materials heart baking. Therefore, the products of Dayou Food are widely loved by consu

统芳生物科技股份有限公司 / TOP GREATS BIOTECH CO., LTD.

8.1A1-07

Address: 台湾地区-台南市-台灣省台南市永康區中正路279巷2弄53.55號 Taiwan China NO.53,Alley 2, Lane279, ChungCheng Road, YeongKang district,Tainan city, Taiwan.
Tel: 886-2322699 / 886-6-2322699
Email: march.cjt@msa.hinet.net
Web: www.tophealth.com.tw

百年企業本公司為歷史悠久之酵素、牛樟芝及多種功能性營養保健食品的專業廠，由研發、發酵釀造生產（GMP國際級醫療車間），大陸國內兩岸進口報批手續完備，一條龍服務完整程序的製造廠。生產劑型有粉末、顆粒、片劑、膜衣、膠囊填充、濃縮提取飲劑、口服液生產釀造發酵原料，是目前台灣單一車間流水線最多樣，GMP國際認證最多項目，品質認證最完整的集團企業。回车My father acceded to my grandfather's enterprise and kept developing; now I continue his development in reverential attitude and hope to push the businesses of Top Greats Biotech Co. & the related corporations to the leading top this era.

双诚贸易股份有限公司 / Scgreenlife Trading Company

8.1A1-09

Address: 台湾地区 台北市-台北市大同区迪化街一段46巷30号 Taiwan China Taiwan-Taipei-No.30, Lane 46, Sec.1, Di Hua Street, Da Tong District
Tel: 18964543052
Email: kathy_niuniu@qq.com
Web: www.morganhope.com.tw

双诚贸易股份有限公司来自于中国台北，该公司拥有慕耕活和翠竹轩两大台湾茶品牌，深入台湾茶产品,为深度的品茶爱好者打造茶与生活的文创产品。我们坚持天然、无毒、友善大地，致力于茶叶栽培与制茶技术，并依气候变化调整制茶的细节。亲自焙茶，让您品嚐传统与创新结合的天然好滋味。系透过自然农法栽种，採用业界高标准检验规格，通过 SGS-457项农药残留检验，合各国家标准不含化学农药，筛选出安心健康的产品。

Scgreenlife Trading Company is from China Taipei, our company represent two of the best Taiwanese Oolong tea brands Morganhope & CuiZhuXuan. Provide the best combination in ideal life with high quality tea for tea lovers.

花蓮縣玉溪地區農會 / Yushi Area Farmers' Associatiom

8.1A1-11

Address: 台湾地区 台灣-玉里鎮-花蓮縣玉里鎮中山路二段49號 Taiwan China Taiwan-Yuli-No.49,Section2, Zhongshan Road, Yuli Town, Hualien County
Tel: +886 8 888 3181 / +886 3 888 3181
Email: lin.o1210@msa.hinet.net
Web: www.twyushi.com.tw/122171

本會1918年創立以來，歷經百餘年的改革蛻變，從典型的鄉村型農會,成功轉型成現代化都市型農會，演變的歷程，也正是台灣農業發展史的縮影。在瞬息萬變的環境中,農會已趨向於多角化的經營方式，除了傳統推廣農業、輔導農民的功能外，更邁向現代化、企業化，重視公益福利的經營。

This association has successfully transformed into a modern urban-type peasant association from the rural-type peasant association. The evolution process is the epitome of Taiwan's agricultural development history. In addition to the traditional promotion of agriculture and the function of peasants, the peasant association has become more diversified. .

主璿整合行销有限公司 / JHU SYUAN CO., LTD.

8.1A1-12

Address: 台湾地区 台中市-台灣 Taiwan China taichung City
Tel: +886423828848
Email: tommy102137@yahoo.com.tw
Web: hbs8882012.shoplineapp.com/products?theme_preview=ultra_chic

我司从2015年起开始跨入内地市场,从跨境,到展销,以及落地合作都一步一脚印的做好台湾地区正品导入内地的工作,曾参加“2017~2019天津台湾商品博览会”“2018年天津梅江年货展销会”、“2018上海中国进口博览会”及“2018、2019福州海交会”所展销产品皆获得良好口碑与一致好评。

Since 2015, our company has entered the mainland market. From cross-border to exhibition, and landing cooperation, we have done a good job in importing Taiwanese products into the mainland. We participated in the "2017~2019 Tianjin Taiwan Commodities Fair", "2018 Shanghai China Import Expo" and "2018, 2019 Fuzhou Haijiao Fair" all received good reputation and praise.

安德魯紳有限公司 / ANDREWSON CO., LTD.

8.1A1-13

Address: 台湾地区 屏東縣-萬丹鄉-大昌路952號 Taiwan China No.952 Dachang Road,Wandan Town, Pingdong County
Tel: 0591-8792-2517
Email: andr.food@gmail.com
Web: www.sausage.com.tw

安德魯紳企業集團成立於1985年，以研發台灣香腸調味料(發明者)及生產香腸佐料、肉品醃漬佐料等系列產品。現階段主要客群為台灣地区及中國大陸各大連鎖、小型餐飲店、團膳、食品加工業等等。

Founded in 1985, the Andrewson Enterprise Group started its business from researching and developing Taiwanese sausage seasoning (inventor) as well as manufacturing products such as sausage condiments and meat marinate condiments.

花果椿妆股份有限公司 / SUNNVILL CO., LTD.

8.1A1-14

Address: 台湾地区 嘉義縣-民雄鄉-中正路25號 Taiwan China Taiwan-Chiayi County-NO.25, Zhongzheng Rd., Minxiong Township,
Tel: +88652131818
Email: sales@sunvillage.com.tw
Web: www.sunnvill.com

花果椿妆成立於2003年，以傳統釀造工序，搭配現代化製酒設備，運用寶島台灣豐富的水果資源，以花卉、水果做為食材，打造台灣在地水果花酒品牌，挹注了在地文化、土地關懷感，用心珍惜土地、農民與農產品，釀出最好的酒。我們以專業調香師自詡，將碩大飽滿的台灣水果，從除梗破碎、發酵熟成到過濾澄清，一步步如醒酒般輕喚起水果天然純粹菁華，將水果的清香與酒體調和成順口和諧的滋味，以醇酒風度，重新詮釋台灣水果王國佳譽。

Taiwanese climate and agricultural cultivation result a variety of delicious fruits all the year, that making Taiwan region wins the reputation of "Kingdom of fruits". 「SUNN VILL」Captures Taiwan's sunlight, climate and customs. To produce the brewing taste of fruits.

汉坤国际医药股份有限公司 / Han Kuen International Medical Co., Ltd.

8.1A1-16

Address: 台湾地区 台中市清水区中山路77号2楼 Taiwan China 2nd Floor, 77 Zhongshan Road, Qingshui District, Taichung City
Tel: 52587078
Email: 571812946@qq.com
Web:

公司创立于1995年，一直在医疗保健食品行业辛勤耕耘，奉行以「仁」为出发点，基于服务以「人」为本的理念，建立人性化且合理的管理制度，「热情、无私、奉献」是本公司一直努力达成的目标。以人为本，落实人本，确保品质，上行下效，提升全体人员服务理念。总公司经过十多年的市场洗礼，全力打造专业的养生健康食品连锁销售平台,建立一个覆盖面广、旨在为几千万亚健康病人及更多追求健康的人士提供健康服务、养生概念。

Founded in 1995, the company has been working hard in the health care food industry. It is based on the principle of "people" and establishes a humane and reasonable management system based on the concept of "people". "Enthusiasm, selflessness and dedication" It is the goal that the company has been striving to achieve.

加洲果菜運銷合作社 / CALIFORNIA FARM COOPERATIVE SOCIETY

8.1A1-18

Address: 台湾地区 高雄市-路竹區永華路18-8號 Taiwan China Kaohsiung-No.18-8, Yonghua Rd., Luzhu Dist.,
Tel: +886-7-6966160 / +886-6966160
Email: hannren@yahoo.com.tw
Web:

We have over one hundred farmers as our partner, whereas majority of them are capable of providing traceable organic fruits and vegetables. The flagship produce includes broccoli, cucumber, okra, beef tomato, sweet corn and baby corn.

全盛国际实业有限公司 / CASH FLOURISH INTERNATIONAL CO., LTD.

8.1A1-19

Address: 台湾地区 TAIPEI CITY-台北-大同区库伦街13巷3弄18号 Taiwan China TAIPEI CITY-DATONG DIST., -NO.18, ALY. 3, LN. 13, KULUN ST.,
Tel: 00886-2-25954388
Email: shihao@cashflourish.com
Web: www.qsgisy.com

台北全盛国际实业有限公司成立于2013年。旗下品牌“全贺”是台湾优良食品品牌，集多年丰富的品牌管理和产品开发管理经验为一体，以独树一帜的“台湾优良食品”特色定位，“年轻、时尚、潮流”的气息深入人心，外加专业的原料采购制度精选高质量台湾本土原材料、严格的继承传统美食的制作步骤，是集传统和美味的完美呈现。品牌“全贺”迅速从众多同行业竞争品牌中脱颖而出。

CASH FLOURISH INTERNATIONAL CO., LTD.Established in 2013. We are Taiwan best food brand, Set more than 6 years rich brand management drink product development management experience as a whole. With unique characteristics of Taiwan's finest food positioning. The atmosphere of young fashion trend is deeply roots in people's heart, plus professional procurement system strict raw material supply.

富懋全球生技股份有限公司 / Food & Health Co., Ltd.

8.1A1-20

Address: 台湾地区 雲林縣-斗六市-竹圍路405號 Taiwan China Yunlin County-Douliou City-No.405, Jhuwei Rd.
Tel: 886-5-5510445
Email: foodhealth5510445@gmail.com
Web: www.food-health.com.tw

富懋全球生技股份有限公司專業生產穀粉、雜糧膨發、焙炒、蔬菜農產加工、脫水、乾燥、研磨等。擁有自有品牌「FOOD&HEALTH富懋生技」,代理品牌「陽光田園」、「SUN田園」。己通過HALAL認證、ISO 22000:2005食品安全管理驗證,及HACCP食品安全衛生管理規則。
Food and Health Co., Ltd. specializes in the production of comprehensive health powder, miscellaneous grains, roasting, vegetable processing, dehydration, drying and grinding. Have their own brand "FOOD&HEALTH"and is the agent of "Sunshine Garden" and "Sun Garden". Has passed HALAL certification, ISO 22000:2005 food safety management verification, and HACCP food safety and health management rules.

HONEYCOMB BIOTECHNOLOGY., CO LTD

8.1A1-24

Address: 台湾地区 Taiwan China-Kaohsiung-No.31-3, Ln.89, Wacuo St., Dashu Dist., Kaohsiung City 84045
Tel: +886-7-652 5680
Email: nshg01965@gmail.com
Web: www.honeys.tw.com

Wu Mingsheng's beekeeping location is strictly selected in the high-quality environment of Haoshan and good water. All bee products have passed the rigorous testing of the Executive Yuan's COA (CNS1305, C3/C4, 310 antibiotics and pesticides) and obtained halal certification. Passed ISO 22000, HACCP verification and the Intellectual Property Office Merchandise Registration Certificate.

台湾宏金富食品有限公司 / Taiwan Hong Jinfu Trading Co., Ltd

8.1A1-28

Address: 台湾地区 台湾-台北-松山区南京东路4段17号8楼之五 Taiwan China Taipei-Fifth, 8th Floor, No.17, Section 4, Nanjing East Road, Songshan District
Tel: 13860403718
Email: 2647880710@qq.com
Web:

我司是一家专业从事台湾进口商品批发、零售、代理进口免税报关等一站式服务的综合性企业。我司经销批发的台湾食品、休闲食品、台湾饮料、果汁、甜点畅销消费者市场,在消费者当中享有较高的地位,公司与多家零售商和代理商建立了长期稳定的合作关系。
Our company is a comprehensive one-stop service enterprise specializing in the wholesale, retail and import duty-free customs declaration of Taiwan imported goods. Our company sells wholesale Taiwan food, snack food, Taiwan beverage, fruit juice and dessert in the consumer market and enjoys a high status among consumers.

嘉利食品有限公司 / CHIA-LI FOOD CO., LTD.

8.1A1-21

Address: 台湾地区 民雄鄉-嘉義縣 Taiwan China Minxiong Township-Chiayi
Tel: 886-5-2209370
Email: chialideji@gmail.com
Web: www.jiali.com.tw

由【嘉新醬園】一路走來,直到現在的【嘉利食品有限公司】,四十餘年的日子裡,遵循古法這精神卻始終不變。堅持著最初的信念來製作、釀造、回饋給顧客最好的禮物,就是【品質】的保證,有好的把關,才能吃得安心。近年來,市場的變化中,【嘉利】更積極投入【研發】,就是要推出更多元的產品。讓消費者面對【豆腐乳】,不再只是傳統的印象,而是一種耳目一新的衝擊。持續不斷的努力著,只是希望更多消費者看到,並且喜愛這產品。
It has been more than 40 years since our establishment of "Chia Sin Soy Sauce Factory" to the current "Chiali Food Co., Ltd."We strongly believe that only stringent quality control will allow customers to consume our products at ease.

花蓮縣富里鄉農會 / Taiwan Hualien HsienFuli Farmers' Association

8.1A1-25

Address: 台湾地区 花蓮縣富里鄉羅山村東湖9鄰6號 Taiwan China No.6, Donghu, Fuli Township, Hualien County 983
Tel: 03-8821705
Email: u653314@gmail.com
Web: www.fulifa.com.tw

成立於西元1950年的富里鄉農會,致力協助在地農民生產、銷售及訓練。經多年努力,「富麗米」以優異的品質征服了每個人的味蕾,近年投入有機轉型的推廣工作,2001年輔導在地農民成立臺灣第一個有機農業村,營造以「生產、生活、生態」為三生一體的有機社區,長期與農民合作。富里鄉農會以「與大地友善共生」經營理念,立志守護花東淨土、守護農民、守護消費者健康,承諾「給您來自花東土地上最純淨、美好的農情味」。
Fuli Township Farmers' Association was founded in AD 1950, is committed to helping farmers in the production, marketing and training. After years of efforts, "Fu Li Mi" excellent quality conquered everyone's taste buds, to enter the international market in recent years, are also actively applying CAS, IS9001, IS9002, EU certification, and more investment in the promotion of organic transformation.

天貿實業有限公司 / Tianmao

8.1A1-22

Address: 台湾地区台南市北區西門路4段330巷60號 Taiwan, China- Tainan City-No.60, Ln.330, Sec.4, Ximen Rd., North Dist., Tainan City 704
Tel: +886960559920
Email: tianmao2002@gmail.com
Web:

蔗糖風味糖漿、水果風味糖漿、食品專用機械、Syrup。

金台灣聯合貿易有限公司 / Golden Taiwan United Trading Co., Ltd.

8.1A1-26

Address: 台湾地区-高雄市-前金區中正四路211號六樓之三 Taiwan China Kaohsiung City-3rd Floor, No. 211, Zhongzheng 4th Road, Qianjin District
Tel: 186-5926-8577
Email: 1156016049@qq
Web: www.weca.org.tw

「金台灣聯合貿易有限公司」累積豐富經驗及傳承,屹立台灣 10 餘年,起始創立於高雄市,經營台灣高山茶葉代理,步步耕耘,為台灣高山茶開路先鋒之一。為立足台灣地区,前進大陸,放眼世界,作為企業標竿,並為茶界注入一股新潮流,以自然有機綠色生產為宗旨,從契作、栽種、茶菁製造、烘焙技巧、加工分級,以精湛技術及嚴格品管,所有金台灣團隊秉持優良品質的執著,推廣正宗台灣茶。
"Golden Taiwan United Trading Co., Ltd." has accumulated rich experience and heritage. It has been established in Taiwan Region for more than 10 years and was founded in Kaohsiung City. With the aim of natural organic green production, with superb technology and strict quality control, all Jintai team upholds the dedication of good quality and promotes authentic Taiwanese tea.

富郁國際實業有限公司 / FU YU GLOBAL INTERNATIONAL ENTERPRISE CO., LTD

8.1A1-29

Address: 台湾地区-桃園市-中壢區環西路二段226巷12號1樓 Taiwan China Taoyuan City-1F., No.12, Ln. 226, Sec. 2, Huanxi Rd., Zhongli Dist
Tel: +886-3-2810188
Email: 0919959369fu@gmail.com
Web: www.cohs.org.tw/gold-2/gold-4/new_page_048.htm

「富郁國際實業有限公司」累積豐富經驗及傳承,屹立台灣 50 餘年,起始創立於雲林縣,由傳統茶莊,步步耕耘,為台灣高山茶開路先鋒之一,2013 年在台灣成立「富郁公司」以自然有機綠色生產為宗旨推廣正宗台灣茶,並經 ISO 國際認證及茶葉生產履歷認證,保證品質安全優良,榮獲 2014 年﹝中華民國消費者健康安全協會﹞優質企業甄選認證—台灣第一・信譽品牌—「台灣第一品牌」之殊榮。
"FU YU GLOBAL INTERNATIONAL ENTERPRISE CO." has accumulated lots of experience . It has been established in Taiwan for more than 50 years. It was founded in Yunlin County and built by traditional tea house. "Fuyu Company" popularized Taiwanese tea and has passed ISO international certification. It was awarded the 2014 "Taiwan's first brand".

富騰國際開發股份有限公司 / Futeng International Development Co., Ltd.

8.1A1-30

Address: 台湾地区 桃園市-八德區桃鶯路南僑巷41號 Taiwan China Taoyuan City-41 Nanqiao Lane, Taoying Road, Bade District
Tel: 18659220755
Email: 1265768585@qq.com
Web:

公司自創立以來一直致力於保健食品的研究與創新!自2012年起更積極投入生技產業的研發技術!將傳統配方手工製作的陳皮八仙果注入全新的生產技術!運用生技技術提升陳皮八仙果的口感與效能!
Since its inception, the company has been committed to the research and innovation of health food. Since 2012, more active investment in research and development technology of biotechnology industry! Handcrafted orange peel balsam fruit with traditional formula is injected into the new production technology! Use biotechnology technology to improve the taste and efficacy of Citrus peel Baxianguo!

鈺統食品股份有限公司 / Goldencrops Corporation

8.1A1-33

Address: 台湾地区 雲林縣 斗六市-科加路9號 Taiwan China Yun Lin County-Tou Liu City-No.9, Kejia Road
Tel: +886 5 5515152#168
Email: jorinatw@yahoo.com.tw
Web: www.goldencrops.com.tw

Goldencrops Corporation成立於1987年1月,目前在台灣雲林縣鬥六市擁有3家工廠。主要業務是食品原料進出口貿易,食品生產,食品OEM / ODM。加工的速溶營養飲料和速溶穀物是我們的主要產品。Goldencrops多年來為眾多知名品牌客戶設計和開發定製配方。憑藉各種質量認證和專業的自動化生產線,Goldencrops提供台灣最廣泛的穀物加工生產。對於不同類型的包裝系統,如罐/袋/盒/便攜包,我們絕對可以滿足客戶的所有要求。
Goldencrops Corporation, established in January 1987, currently owns 3 factories located in Douliou City, Yunlin County, Taiwan. The main businesses are food raw materials import and export trade, food production, and food OEM/ ODM. Processed instant nutritional drinks and instant cereals are our key products. Goldencrops has designed and developed customized formula for years for numerous clients.

MENUDENCIAS

8.1A2-01(01)

Address: 阿根廷 Argentina buenos aires-Av Marquez 5189
Tel: 541148489217
Email: ernesto@menudencias.com
Web:

We are main Producer and Exporter of Beef Offal from Argentina.Argentina SIF / Plants: #1983 # 200 #89
Welcome to contact us to our export department. Please, write to ernesto@menudencias.com

兆鴻生技股份有限公司 / Zhao Hong Biotechnology Co., .

8.1A1-31

Address: 台湾地区-台北市-內湖區洲子街61號5樓 Taiwan China Taipei City-5E, No.65, Zhouzi St., Neihu Dist.,
Tel: 886226588776
Email: anita@zh-biotech.com
Web: www.zh-biotech.com

兆鴻為「Zen Of Health」簡稱,即健康禪。身心保持均衡健康狀態,才能創造生活的優質美好。兆鴻產品研發,以禪宗所說的「本來面目」為基石。秉持企業誠信與良心,為人類健康謀福祉,始終如一。以科學實證為基礎,產學合作創新研發、過程嚴格把關,滴水不漏。堅持初衷自然養食;堅持不改基因、不添加化學物質,順應生物特性成分,用高端科技技術取得,嚴選精製而成。自然養食,健康踏實。您的健康是我們共同的希望。
Zhao Hong Biotechnology Co., Ltd was established in 2010 and is specialized in the production of health supplement which is made of golden clam. The unique golden clams come from Huailien, Taiwan. With the rich breeding environment formed by a good condition of mountain, water, underground spring and abundant algae make the golden clam have more nutritional value than those in other areas.

新呈國際有限公司 / NewSOKA INTERNATIONAL LTD

8.1A1-36

Address: 台湾地区 Taiwan China-台北市-台灣省台北市文山區和興路44巷52號2樓 Taiwan China TAIWAN-TAIPEI CITY -2F. NO.52, LN.44, HEXING RD., WENSHAN DIST.,
Tel: 886-2-22366738
Email: xu540101@gmail.com
Web: www.newsoka.com

新呈國際在台灣生產製造養生茶食品,堅持產品質量穩定並日益進步。NewSOKA產品與台灣醫藥大學醫學系合作,科學功效實驗【御醣方茶】平衡血糖有效,是關注血糖人仕最佳的茶療飲品,【御酯方茶】能改善高血脂症NewSOKA產品熱銷地點:中國,香港、澳門地区,東非阿曼,中東海灣國家,多倫多健康食品連鎖店等地區在藥妝連鎖店,裕華國貨,華豐百貨,濟生藥房,中西藥房均售歡迎加入健康養生代理行列。
NewSOKA health tea research and development cooperation with the department of medicine,university of medicine, Taiwan, scientific verification Guava Tea it is the best tea reatment drink for people who pay attention to blood glucose Diet tea It shows Diet ester tea can improve hyperlipidemia,welcome join health preservation sale.

MARFRIG ARGENTINA

8.1A2-01(02)

Address: 阿根廷 Argentina Buenos Aires-Munro-Avalos 2829
Tel: 00541154321800
Email: patricio.phelan@marfrig.com
Web: www.marfrig.com

Marfrig Global Foods is one of the world's leading beef producers, with 22 primary processing units, 12 further processing units and eight distribution centers spread across Brazil, Argentina, Uruguay, Chile and the United States. It is one of the world leaders in the production of hamburgers, with processing capacity of 232.000 tons per year.

福寿实业股份有限公司 / FWUSOW INDUSTRY CO., LTD.

8.1A1-32

Address: 台湾地区 台中市-沙鹿区沙田路45号 Taiwan China TAICHUNG-45, SHA TYAN ROAD, SHA LU
Tel: 886-4-26363439
Email: donna@fwusow.com.tw
Web: www.fwusow.com.tw

*An Ongoing Tradition Since 1920!! 1. Operating Business:Edible Oil, Cereal Food, Pet Food, Animal Feed,Aquarium fish feed,Koi feed,Bio-product, Fertilizer ,Livestock feed,Poultry feed. 2.PET FOOD PLANT:Certificated for ISO9001, ISO22000, HACCP 3.FOOD PALNT:ISO9001, FSSC 22000, ISO 22000, HACCP, TQF Quality assurance certification.

久沅企業有限公司 / Chiu Cuan Co., Ltd.

8.1A1-37

Address: 台湾地区 新北市-汐止區環河街136號 Taiwan China New Taipei City-No.136, Huanhe St., Xizhi Dist.,
Tel: +886226941818
Email: supermeitw@gmail.com
Web: www.supermeitw.com
www.supermeitw.com/index.php?lang=en

We can do OEM & ODM. Chiu Cuan was founded in autumn in 1995. "Genuineness" and "Sincerity" shown as our concept. Through a decade plus continuous development, we has assumed a good state of development, so in this year we has launched our new dual brand products ROROICE, looking forward to selling "Super Mei" and "Varta" throughout the world.

得意中華食品有限公司 / D.E CHUNG HUA FOODS Co., LTD

8.1A1-39

Address: 台湾地区 高雄市岡山區本工一路25號 Taiwan China NO.25,Bengong 1st Rd, Gangshan Dist.,Kaohsiung City, 820
Tel: 886-7-6229100
Email: de6973308@yahoo.com.tw
Web: www.de-food.com.tw

得意中华创始于高雄市,生产制造铁蛋、豆干、卤味等系列产品,在政府的辅导下,营销世界30余国,是Made in Taiwan的骄傲,无添加人工香料,无添加防腐剂、色素、味素,以一次卤科技工法,真空包装高温杀菌,完整的品管系统,通过CAS、HALAL、SGS、ISO22000、新加坡AVA等多项国际认证,专业OEM、ODM服务,提供您随手可得安心得好味道。
we proudly market our Taiwan-made product in more than 30 worldwide. Our products contain no artificial seasonings, and no preservatives, coloring agents, or flavoring agents. We use a one-step braising process, vacuum packaging, and high-temperature sterilization. We have a comprehensive QC system and have passed many international certifications, including CAS, HALAL, SGS, ISO22000, and AVA.

FRIGOLAR

8.1A2-01(03)

Address: 阿根廷 Argentina Buenos Aires-Abasto, La Plata-Avenida 520 y 214
Tel: 542214913128
Email: hernadepablo@gmail.com
Web: www.frigolar.com.ar

Meat processor. Family company with over 50 years in the meat industry.

ARRE BEEF SA

8.1A2-01(07)

Address: 阿根廷 Argentina Buenos Aires-CABA-Lola Mora 421-9º floor
Tel: +5491152458409
Email: tomas.bennett@arrebeef.com
Web: www.arrebeef.com

In 1921, Mr. Jaime Borrell and his family got their start in the sale of beef with a small butcher's shop in Buenos Aires province. Since then, and through the following generations, that undertaking has grown and evolved into what is today ArreBeef S.A. With almost 100 years of history, the business is still managed by the Borrell family.

INDUSTRIAS FRIGORIFICAS RECREO SAIC / Industrias Frigorific Recreo

8.1A2-01(10)

Address: 阿根廷 Argentina SANTA FE-SANTA FE-RUTA 11 – KM 478 – RECREO SUR – SANTA FE –ARGENTINA
Tel: +5493425463231
Email: mariolasso47@gmail.com
Web: www.frigorificorecreo.com

Industrias Frigoríficas Recreo, since 1964, produces products subject to strict quality standards with an average production of 2 million kilos per month in food.
In each of the productive processes carried out by our company, the priority is the consumer who chooses our products to share and taste with his family.

Frigorifico Forres Beltran S.A

8.1A2-01(13)

Address: 阿根廷 Argentina Santiago del Estero-Ing. Forres-Ruta Nac. 34 Km. 698,5
Tel: +543854902348
Email: sinsua@frigorificoforres.com.ar
Web: www.frigorificoforres.com.ar

Forres Beltran S.A. is a slaughterhouse and export beef company.

Frigorifico Gorina SAIC

8.1A2-01(05)

Address: 阿根廷 Argentina Ciudad Autonoma de Buenos Aires-ciudad autonoma de buenos aires-Avenida de Mayo 676
Tel: +54 11 4331-5066
Email: esteban.berisso@friggorina.com
Web: www.friggorina.com

Gorina is a leading company in the Argentine meat-processing industry. Its modern industrial plant has advanced infrastructure making Gorina a remarkable supplier of meat products for the international market.

Compañia Bernal SA

8.1A2-01(08)

Address: 阿根廷 Argentina Buenos Aires-Bernal Oeste-Comandante Franco 4901
Tel: +541163116500
Email: romina_rolando@ciaber.com
Web: www.ciaber.com

Our plant 2062 produce bone in and boneless chilled and frozen beef products under the highest quality standards to supply both the international and domestic markets.

OFFAL EXP S.A.

8.1A2-01(11)

Address: 阿根廷 Argentina SANTA FE-ROSARIO-GORRITI 196 BLDG. CUBO A 7TH FLOOR
Tel: 543414345000
Email: expoventas@expobureau.com.ar
Web: www.offalexp.com.ar

Main supplier of beef Offal from South America to the World.

La Anonima (Sociedad Anonima Importadora y Exportadora de la Patagonia)

8.1A2-01(14)

Address: 阿根廷 Argentina Buenos Aires-Ituzaingo-Int. Perez Quintana 3850
Tel: +5491154111330
Email: mgonzalez@exsersa.com.ar
Web:

We are a Supermarket chain with 160 stores distribiuted along the center/south of the country. We own 2 slaughter houses and slaughter 1200 heads a day. We export 1.500 Tns a month, we are the 4th largest exporter of Argentina.

Urien Loza SA

8.1A2-01(06)

Address: 阿根廷 Argentina Buenos Aires-Del Viso - Pilar-Complejo Oce Park. Edicio Cibra, 2 "I" Panamericana, Ramal Pilar, km 42,5 - (B1669CKH)
Tel: 542320658860
Email: jorgeromero@urienloza.com.ar
Web: www.urienloza.com.ar

The Group Urien Loza S.A started operating In the Argentine beef market since 1997. Its most important activity is the export of meat from the plants SANTA GIULIA S.A. and BLACK BAMBOO ENTERPRISES S.A. trought Malefu Agropecuaria SRL. Our usual suppliers are cattle breeders who have chosen the quality of the British breeds.

ECOCARNES - VIANDE (SIF1918)

8.1A2-01(09)

Address: 阿根廷 Argentina Buenos Aires-San Fernando-Ruta 202, km 5,5
Tel: +5411 47149209
Email: nmozas@viandesrl.com
Web: www.viandesrl.com

We are an Argentine company producing and exporting meat to major global destinations. We are based on more than 40 years of experience in the agricultural and beef industry, guaranteeing the quality of our products, through compliance with all requirements of the global market.

COMPAÑIA CENTRAL PAMPEANA SA

8.1A2-01(12)

Address: 阿根廷 Argentina Buenos Aires-Martinez-Entre Rios 2370
Tel: +541152529208
Email: info@ccpfoods.com.ar
Web: www.ccpfoods.com.ar

Compañia Central Pampeana SA is leading company in the beef market with the objective of distributing beef to the world. We are a team of professionals who, thanks to our strategic associates' network, are globally present. We focus on the satisfaction of our clients, achieving the highest quality standards on each production stage.

FRIGORIFICO ALBERDI S.A.

8.1A2-01(15)

Address: 阿根廷 Argentina ENTRE RIOS-ORO VERDE -RUTA PROV. 11 KM 9,5
Tel: +54 9 343 4975070
Email: export@falberdi.com
Web: www.falberdi.com

Frigorífico Alberdi S.A. It is located in the province of Entre Ríos, integrating the so-called region of the Argentine Humid Pampa, the center of livestock production in the country. Large areas of natural pastures bordered by rivers and streams that make up the ideal environment for livestock rearing under optimal conditions of well-being and health. The company was founded in 1983 with the Offi

Rafaela Alimentos S.A.

8.1A2-01(18)

Address: 阿根廷 Argentina Santa Fe-Rafaela-Parana 899
Tel: +54 3464 426085
Email: luisviera@rafalim.com
Web: www.rafaelaalimentos.com

Is a family company, operating since 1915, producing beef, pork meat and sausages. It has 2 production plants, one located in Rafaela, which produces pork products, and another in Casilda, devoted to slaughter and debone cattles, producing chilled and frozen beef products, approved for the most demanding markets.

Frigorifico Visom S. A.

8.1A2-01(21)

Address: 阿根廷 Argentina Buenos Aires-Los Polvorines-Jose Leon Suarez 3451
Tel: +541152779419
Email: fernando@visom.com.ar
Web:

Argentinian Beef Meats, producer and exporter.

Frigorífico General Pico S.A.

8.1A2-01(16)

Address: 阿根廷 Argentina La Pampa-General Pico-Calle 24 Esquina 47
Tel: +54 11 4733 3511
Email: fmasor@frigopico.com
Web: www.frigopico.com.ar

Frigorífico General Pico S.A. Plants Nr 2531 and Nr 2792 Production of high quality beef and offals chilled and frozen and by-products. Family company with vast experience in the industry with development of international markets. Located in Argentina in the middle of the PAMPA HÚMEDA, the best livestock production area of the British breeds Hereford and Aberdeen Angus.

SANTA GIULIA S.A.

8.1A2-01(19)

Address: 阿根廷 Argentina BUENOS AIRES-ALEJANDRO KORN-RUTA 210 KM 46,500
Tel: +5491170320531
Email: l.mariani@santagiulia.com.ar
Web: www.santagiulia.com.ar

ARGENTINEAN BEEF PRODUCER.

遊山茶訪茶業股份有限公司 / YOSHANTEA TEA Co., LTD.

8.1A2-02(01)

Address: 台湾地区 南投縣-竹山鎮-延平路19號 Taiwan China Nantou County-Zhushan Township-No.19 Yanping Road
Tel: +886492643919
Email: andy@yoshantea.com
Web: www.yoshantea.com

種茶、製茶從清光緒到今天。早自19世紀中期，遊山茶訪的先祖陳氏家族早已在烏龍茶的旅程上探索跋涉了。為臺灣唯一將產、製、銷、文化等產業串連的公司，專門銷售臺灣高品質茶葉。遊山茶訪不是茶商，是製茶人與茶農世家，是好茶實踐主義者，對臺灣茶有鍾愛與堅持。通過FSSC22000國際認證，所有茶葉通過農藥殘留檢驗，茶葉銷往中国大陆、俄羅斯、日本、韓國、馬來西亞、新加坡、捷克、英國、奧地利、法國、美國。
The journey of Yoshan Tea can be read hand in hand with the history of Taiwanese Dong Ding oolong. In the mid-19th century. The Chen family of Yoshan Tea were already knee-deep in their exploration of Taiwanese oolong. It is now Yoshan Tea's mis-sion to preserve and continue the art of making this classic tea.

Devesa - Azul Natural Beef S.A.

8.1A2-01(17)

Address: 阿根廷 Argentina CABA-Buenos Aires-Maipu 374 3th floor
Tel: +541152970000
Email: cdiazdelfino@devesa.com
Web: www.devesa.com

DEVESA offers a wide portfolio of meat products from carcass and primal cuts to value-added raw. The creation of value begins in the fields with the raising of our own cattle and continues in the processing facility with the elaboration of our tailor-made products, guaranteeing an excellent quality and presentation, without hormones or antibiotics.

FRIGORIFICO RIOPLATENSE S.A.I.C.I.F

8.1A2-01(20)

Address: 阿根廷 Argentina Buenos Aires -General Pacheco-Av. de los Constituyentes 2499
Tel: 4006-2500 (int 236)
Email: jbisso@rioplatense.com
Web:

Being one of the largest beef packing operations in the country, its current production facility includes a plant located in the province of Buenos Aires with a processing capacity of 2.000 heads per day. The Company is constantly looking for investment opportunities to update and improve its industrial performance.

TAI SHIANG TEA CO.,LTD

8.1A2-02(02)

Address: 台湾地区 Taiwan China Taipei City-5F. No.130, Sec.5, Roosevelt Rd.
Tel: +886-2-2934-2788
Email: sandykao@taishiangtea.com
Web: tstea.cn.taiwantrade.com

TAI SHIANG TEA CO., LTD has an excellent experience in making Formosa Teas upwards of fifty years since 1966. We are old and well-established manufactory and have a good relationship. We provide Taiwan Oolong Tea, High Mountain Oolong Tea, Wen Shan Pouchong Tea. The material of Beverage, PET bottle tea drink, Basic tea of mixed flower or Additives, Material for Tea Bag Fannings.

勤馥實業有限公司 / caoly industrial co., ltd

8.1A2-02(03)

Address: 台湾地区 台北市-中山區-林森北路289號6樓-14 Taiwan China Taipei-Zhongshan Dist-6F-14 No. 289 Linsen N. Rd
Tel: 0963067960 / 0225677456
Email: caoly.tea@gmail.com
Web: www.caolytea.tw

茗窖茶莊」三代傳承的品茶DNA，第一代精於品茶也善挑好茶，1936年第二代憑藉家傳品茶功力開設茶莊，從小跟著父親到處收好茶的第三代，於1986年通過中華民國茶藝協會評鑑師認可並拜大師學習製茶。茗窖茶莊只收台灣最出色的烏龍茶，由製茶老師傅精心製作,成就品茗行家最愛的精品茶飲。
Caoly Tea Shop has a tea-loving story of three generations. The grandfather was a tea connoisseur who was good at appreciating and selecting teas.Caoly Tea Shop was founded in 1936 by the second generation owner based on his paternal inheritance of tea appreciation competence.

儀卓有限公司 / EXCEL RANK COMPANY LIMITED

8.1A2-04

Address: 香港地区 SUITES 607-9 6/F NORTH TOWER WORLD FINANCE CENTRE HARBOUR CITY 19 CANTOON ROAD KL Hong Kong China
Tel: 021-64334325 / 64334325
Email: zln@shasft.com
Web:

仪卓有限公司成立于1995年，是一家专业从事国际贸易的服务企业。公司主营业务涉及：为海内外客商提供贸易一体化解决方案，实现转口贸易；为客户提供保险、金融、仓储、物流、境内外展会等一站式供应链服务；国际贸易业务咨询及商务谈判服务；重大工程境外招投标服务等。
Excel Rank International Company Limited was founded in 1995,which was a service enterprise specializing in international trade. The company's main business involves: providing trade integration solutions for customers at home and abroad, realizing transit trade, providing customers with insurance, finance, warehousing, logistics, exhibition at home and abroad and other one-stop supply chain servi.

東爵企業有限公司 / DONG JYUE ENTERPRISE CO.,LTD

8.1A2-02(04)

Address: 台湾地区 中山區-台北市-吉林路218巷10號1樓 Taiwan China Zhongshan Dist. -Taipei City -No. 10, Ln. 218, Jilin Rd.
Tel: +886225422770
Email: queeny@dongjyue.com.tw
Web: 23044064 www.dongjyue.com.tw

世界好茶盡在東爵30幾年的調茶研發技術，茶品種類涵蓋紅茶，綠茶，花草茶等其他東方茶品。東爵好茶是餐飲連鎖店，飲料連鎖店等連鎖企業優良廠商首選，共同追求企業永續經營。
all kinds of tea bag oem odm. black tea / green tea / oolong tea / herbal tea / bubble tea total soution.

笠丰食品有限公司 / LI FENG FOOD CO., LTD.

8.1A2-05

Address: 台湾地区 台中市-大雅区雅潭路27号 Taiwan China Taichung City -No. 27, Yatan Rd., Daya Dist.,
Tel: +886425327288#210 / +886 425327288#210
Email: carrie@sugar.com.tw
Web: www.sugar.com.tw

糖村-以礼物分享概念经营的「蛋糕・糖果・礼盒专卖店」，精选来自法国、欧美等食材，搭配台湾地区当地新鲜特产，期望能以专业、高雅的品牌形象，传递属于糖村的幸福。
Sugar & Spice - The cake, candy, and gift shop takes the gift sharing as our managing vision, has selected the ingredients from French, Europe, USA, etc. with local Fresh food in Taiwan region, expect to deliver the happiness of Sugar & Spice in according with the professional and elegant brand image.

50N Natural Ecology Group Ltd

8.1A3-01

Address: 加拿大 Canada BC-Delta-563 Ebury Place
Tel: 604-525 0777
Email: INFO@50N.CA
Web: www.50n.ca

北纬五十度原生态集团(WWW.50N.CA INFO@50N.CA).秉承着用纯天然均衡营养去呵护和恢复人体健康的理念，在功能性营养食品领域里不停地探索前行。公司总部位于温哥华，十多个分部遍布全球。公司投资众多民生资源的源头，拥有自己的研发团队，五万平尺现代化深加工基地。高科技立体冷冻把海产品的保鲜期从几天延长至几个月。公司出产着食疗植物营养食品--野生亚麻籽油,亚麻籽粉,营养早餐等系列.时尚圈。
50N Natural Ecology Group Ltd (WWW.50N.CA). Adhering to the concept of using natural and balanced nutrition to care for and restore human health, we are constantly exploring the field of functional nutritious food. The company's headquarters are located in Vancouver and have more branches worldwide. The company invests in the source of people's livelihoods, has its own research and development.

NECTAR HEALTH LIMITED

8.1A2-03

Address: 新西兰 大洋洲-阿什伯顿-54 Cass street 阿什伯顿 新西兰 大洋洲 New Zealand 54 Cass street, Ashburton, New Zealand
Tel: 021-64382489
Email: zhaoyuguo@sfybee.cn
Web:

新西兰麦卢卡蜂蜜及制品。
Manuka honey and its products from New Zealand.

阿巴达有限公司 / abaada Corporation

8.1A2-06

Address: 台湾地区-台中市石冈区-丰势路502~1号 Taiwan China Shigang, Taizhong-502-1, Fongshi Road
Tel: +886-4-25812589
Email: Jordan@abaada.com
Web: www.abaada.com

阿巴达有限公司 (abaada Corporation)。以现代化高科技健康产业为核心，成立于2010年。 我们的目标是：◎ 提供高科技的优质健康产品，专业、热忱与完善的服务。◎ 立足于中国，依托一带一路政策，服务全世界。产品：◎ 功能性食品系列，以防未病及慢性病调理产品为主（心血管、糖尿病、痛风、前列腺、胃食道逆流、酵素及牛樟芝等）。◎ 休闲食品系列，咖啡及奶茶。
abaada is a high tech health products oriented company, established in 2010. Our company goals are:◎ Providing superior health products ◎ Standing in China and serving the world. Products:◎ Functional food focusing on chronic illness such as Cardio, Cerebral Vessels, Diabetes, Gout, Prostatitis.◎ Leisure food,coffee and milk tea.

Wattle Health Australia Limited

8.1A3-02(01)

Address: 澳大利亚 Australia VIC-Melbourne-17/71 Victoria Crescent, Abbotsford
Tel: +86 21 6103 7024
Email: elmer.j@wattlehealth.com
Web: www.wattlehealth.com.au

握乐康一直致力于为消费者提供健康、优质、有机和可持续的产品而备受全球消费者的赞誉。产品的成分都源自于澳大利亚的天然纯净水、清洁的空气和有机肥沃的土壤。经过精心的包装，保留产品的营养成分，为消费者呈现最好的产品。我们产品原料经过严格的有机认证,完全不含肥料或农药残留，在保证天然的前提下也保证消费者的安全。我们的最终目标是：让拥有可持续天然养分精华并经过有机认证的澳大利亚健康产品走进全球的每一个家庭。
Wattle Health is premium healthy brand from Australia, we own and control the vertical organic dairy supply chain from farmlands, spray dryer, CNCA packing facility and branding. We will supply to the global market with the premium products of high standard quality, safety and nutritions.

Ricegrowers / Sunrice

8.1A3-02(02)

Address: 澳大利亚 Australia Sydney NSW-Sydney NSW-Level 24/19 Martin Pl
Tel: +65 8121 7760 / +65 8218 4646
Email: rdyer@sunrice.com.au
Web: www.sunrice.com.au

SunRice is one of the largest rice food companies in the world and one of Australia's leading branded food exporters.

Momentum Food and Wine Pty Ltd

8.1A3-02(03)

Address: 澳大利亚 Australia SA-Kent Town-55 King William Street
Tel: 61882106122 / 61 8 82106122
Email: sandra@momentumfw.com.au
Web: www.momentumfoodandwine.com.au

Momentum Food and Wine is a leader in exporting wine, food and beverages around the world, both producing and sourcing the best Australia has to offer.

Hither & Yon

8.1A3-02(04)

Address: 澳大利亚 Australia SA-Willunga-17 High Street
Tel: +61 421246820
Email: yan@hitherandyon.com.au
Web: www.hitherand www.hitherandyon.com.au

Hither & Yon, grown and made by the Leask's family in McLaren Vale, South Australia. Our aim is very simple: respect our family's hard work and leave the land in an even better state for the next generation. Our wines are made for healthy and artistic style set, creating an exciting array of wines and packaging.

Changxing Fishing Port Australia Pty Ltd

8.1A3-02(06)

Address: 澳大利亚 Australia New South Wales -Sydney-level 25，2 park st, Sydney Australia
Tel: 008618616730095
Email: Raymondyxl@gmail.com
Web:

长兴渔港澳大利亚有限公司距离悉尼国际机场仅有15分钟路程，距离港口仅有20分钟路程，便捷的运输更便于我们将澳洲的产品输送给世界各地。我们为来自世界各地的客户从澳大利亚各地出口新鲜的优质海鲜产品，为澳大利亚所有企业寻求更多的海外客户。
Changxing Fishing Port Australia Pty Ltd value add and ship to any destination globally out of our State of the Art export and processing facility located in Marrickville, just 15 minutes from Sydney's international airport and 20 minutes from Darling Harbour. We export their fresh preminum quality seafood product from sources around Australia for its own customers all over the world.

C&S DEVELOPMENT PTY LTD

8.1A3-02(07)

Address: 澳大利亚 Australia VIC-TOTTENHAM-Gate 3/20 OLYMPIA ST
Tel: +61 411888266
Email: YUQIAN.C@CSDEVELOPMENT.COM.AU
Web: www.csdevelopment.com.au

C&S Development is an export/import company that specializes in F&B trade business between Australia and China with a proven history of more than 10 years. C&S Development has its own logistic teams located both in Australia and China. It has successfully introduced some outstanding Australian brands like Jalna, Bulla and Ballantype into China market with its excellent cold chain service.

Blend and Pack Pty Ltd

8.1A3-02(08)

Address: 澳大利亚 Australia Victoria-Hallam-17 Austral Pl
Tel: +61387863637
Email: ivy.k@blendandpack.com.au
Web: www.blendandpack.com.au

自2007年开始运营以来，我们公司（混合和包装）是澳大利亚面向世界市场的优质独立OEM乳品营养混合和包装设施.我们以高度机械化的机器人设施、卓越的质量和混合能力以及创新和尖端产品开发而闻名。我们与全球领先的配料供应商建立了专业联系，以确保我们为客户提供最创新、营养丰富的产品。年产能为14,000吨(1500万罐)，我们有能力满足世界各地客户的需求。
Operating since 2007, Blend and Pack is Australia's premium independent OEM dairy nutritional blending and packing facility to the world market. We're known for our highly mechanised robotic facility, superior quality and blending capabilities, along with innovative and cutting edge product development.

澳大利亚首选有限公司 / Australia's First Choice Pty Ltd

8.1A3-02(09)

Address: 澳大利亚 Australia Victoria-Melbourne-48 Koornang Rd, Scoresby
Tel: 0757-66824225 / 0061 3 9764 9029
Email: echo@australiasfirstchoice.com info@australiafirstchoice.com
Web: www.ozichoice.com www.ozichoice.com.au

澳滋选是澳大利亚的家族企业，向大众提供日常生活优质营养产品。在过去的十多年中，我们开发了多种100%澳大利亚生产的优质产品,其中包括奶粉、奶片、UHT常温奶等一系列乳制品。
我们的优质乳制品不仅供应给本地市场，也出口海外市场。我们的团队享受着绿色的草原，新鲜干净的水和蓝色的天空，为您和您的家人创造出来自澳大利亚天然、美味又营养的优质产品。
Ozi Choice is an Australian family business providing the public with premium nutritious products that are easy to integrate into daily life. Over the past decade, we have perfected a variety of our premium dairy products, which includes milk powders, milky bites, and UHT milk, all 100% made in Australia. Our products are supplied to both local and oversea markets.

Australia MediTree Honey Group Pty Ltd

8.1A3-02(10)

Address: 澳大利亚 Australia WA-Canning Vale-38, Mordaunt Circuit
Tel: +61 430 112 002
Email: meditree.honey@gmail.com rosie@onefood.com.au
Web: www.meditreehoney.com

澳大利亚药树蜂蜜集团（原名：澳大利亚万福滋蜂场有限公司）位于澳大利亚西澳州佩斯市。是西澳著名的高端蜂蜜生产厂家。我公司的蜂蜜产自澳大利亚的原始森林中，是完全未加工原生态蜂蜜。因为我们的蜜群采集地域和森林环境的天然差异化，使得我们生产的原生态蜂蜜具有丰富的天然抗氧化和抗菌物质，且富含矿物质，微量元素，益生元等物质；在滋味和状态上，也具有天然所赋予的独特醇厚，且变化丰富的特征。
Australia MediTree Honey Group is a qualified Australian honey producer. We produce premium active honey collected from Australian native forests. Our honey is completely natural and untreated, cold extracted and packaged, maintaining all the natural nutrients and active properties at maximum level. The honey we bring to you is straight from bees. MediTree honey is a sweet gift from the nature.

Southern Australian Cattle Company Pty Ltd

8.1A3-02(11)

Address: 澳大利亚 Australia SA 5000-Adelaide-Suite 1204,Level 12,147 Pirie Street
Tel: 021-32265073
Email: nevin.zheng@naccex.com.au
Web: www.naccex.com.au

SACC (SOUTHERN AUSTRALIAN CATTLE COMPANY PTY LTD) was founded in 1972, and the company is registered in Adelaide, Australia. The company originally belonged to Elders Rural Services Ltd, which is an ASX-listed agribusiness which operates in Australia and internationally. Wholly-owned by Fanda Australian Live Cattle Industrial (Hong Kong) Co., Ltd in June 2017.

Woolworths Group Ltd.

8.1A3-02(12)

Address: 澳大利亚 Australia NSW-Bella Vista-1 Woolworths Way,
Tel: + 61 439 000 763
Email: dfeng@woolworths.com.au
Web:

Founded in 1924; Australia and New Zealand's largest food retailer; 2018 sales of A$ 62 billion Over 1,000 supermarkets Employing over 200,000 people Publicly listed Well established global sourcing capability & export capability Extensive range of multi tiered private labels.

Meat & Livestock Australia

8.1A3-02(13)

Address: 澳大利亚 新南威尔士-悉尼-沃克街165号1层 Australia 1F, No.165 Walker Street, Sydney, New South Wales
Tel: 86 10 84554546
Email: china@mla.com.au
Web: www.mla.com.au

Meat & Liv estock Aust ralia (MLA) is owned by Australian farmers and works in partnership with industry and government to achieve a profitable and sustainable red meat and livestock industry in Australia. MLA has the unique responsibility of providing marketing, promotional support and research and development services to the entire red meat industry.

Wines by Geoff Hardy

8.1A3-02(14)

Address: 澳大利亚 Australia SA 5171-McLaren Vale-327 Hunt Rd
Tel: +61 8 8383 2700
Email: hanne@winesbygeoffhardy.com.au
Web: www.winesbygeoffhardy.com.au

Wines by Geoff Hardy is a South Australian family-owned and -operated business run by Geoff Hardy, a fifth generation member of one of Australia's most famous wine families, the Hardys. Today, the company produces around 1.7m bottles of premium wines each year, all produced in South Australia.

Australia Queensland Food Corporation Pty Ltd 澳大利亚昆士兰食品集团

8.1A3-02(15)

Address: 澳大利亚 Australia Queensland -Brisbane -Level 19, 10 Eagle Street
Tel: +617 38498879
Email: ciie@qldfood.com.au
Web: www.qldfood.com.au

澳大利亚昆士兰食品集团(QFC)总部位于澳大利亚昆士兰州,向世界出口高品质澳大利亚和牛牛肉、海鲜、葡萄酒、柑橘、橙子、NFC果汁和澳洲蜂蜜。连续两年荣获2015年2016年昆士兰州州长出口大中华区优秀企业奖。QFC在中国建立了自己的子公司,可以通过中国的11个冷藏仓库直接运送到中国多达200多个主要城市。

Queensland Food Corp (QFC) is based in Queensland Australia and export Australian wagyu beef, seafood, wine, mandarin, oranges, NFC fruit juice and honey to the world. It has won Queensland Premier Export Award for exporting to China. QFC established its own subsidiary in China and can deliver directly to all more than 100 major cities in China through 11 perishable warehouses in China.

澳大利亚葡萄酒管理局 / Wine Australia

8.1A3-02(16)

Address: 澳大利亚 南澳州-阿德莱德-ndustry House, National Wine Centre Cnr Botanic & Hackney Roads, Adelaide SA 5000 Australia South Australia-Adelaide-Industry House, National Wine Centre Cnr Botanic & Hackney Roads, Adelaide SA 5000
Tel: 021-62413890
Email: jessie.qian@wineaustralia.com
Web: www.wineaustralia.com

澳大利亚葡萄酒管理局致力于科研开发、市场营销、传播知识、鼓励科研成果的应用、维护澳大利亚葡萄酒的声誉和支持澳大利亚国际葡萄酒旅游业的发展。澳大利亚葡萄酒管理局是澳大利亚联邦政府的法定机构,基于"澳大利亚葡萄酒法"建立,资金来源于向葡萄种植者和酒庄征税、用户参与活动付费,以及澳大 利亚政府提供的与之匹配的研发和投资资金。

Wine Australia supports a competitive wine sector by investing in research, development and extension (RD&E), growing domestic and international markets, protecting the reputation of Australian wine and administering the Export and Regional Wine Support Package.

Freedom Foods Group Limited

8.1A3-02(18)

Address: 澳大利亚 Australia NSW-Taren Point-80 Box Road
Tel: 15800354531
Email: echiao@ffgl.com.au
Web: www.ffgl.com.au

Freedom Foods Group汇集了世界一流的研发、运营、销售和营销团队,为澳大利亚Freedom Foods的自有品牌和其他联合制造品牌提供产品,并出口到世界各地。我们与Freedom农场主们的长期合作伙伴关系使我们能够保证供应和确保澳大利亚原料的质量,以产出高品质的产品。Freedom Foods Group的工厂遍布新南威尔士州和维多利亚州,可针对不同的产品类别提供独特的生产能力。

Freedom Foods Group brings together world-class R&D, Operations,Sales & Marketing teams to deliver products from Freedom brands & co-manufacture brands here in Australia and exported around the world.Our long-term partnerships with our Freedom Farmers enables us to secure supply and ensure quality, Australian ingredients, for quality products.

澳大利亚葡睿酒业 / Magic Dynasty Pty Ltd

8.1A3-02(19)

Address: 澳大利亚 维多利亚州-墨尔本-图拉克区格林德本大道3B Australia Victoria-Melbourne-3B Glyndebourne Avenue, Toorak
Tel: 021-56093200
Email: petersang@cellaraustralia.com
Web: www.pranwines.com

"澳大利亚葡睿酒业"(Magic Dynasty) 起源于1891年,专注精品酒业务,总部设在澳大利亚墨尔本。本公司致力于与澳大利亚知名葡萄酒产区内品质超群的五星级酒庄合作,并将他们的优质佳酿销往中国市场.我司团队谙熟澳洲葡萄酒产业链运作,拥有强大的酒庄资源整合实力。2014年及2016年,本公司被澳大利亚葡萄酒管理局评为2014年度和2016年度中国区最佳进口商。

Magic Dynasty has been specialized in Australian premium wine marketing and distribution since 1891. We has long-term cooperation with numbers of Five-Star Wineries. Our team know well with the Australian wine industry operation and has a strong strength in the winery resources integration. We was awarded by Wine Australia as the Best Australian Wine Importer in China in 2014 and 2016.

Ausvigor Global Pty Ltd

8.1A3-02(21)

Address: 澳大利亚 Australia Victoria-Docklands-23/8 Waterside Place
Tel: +61406130019
Email: info@livingpure.com.au
Web: www.livingpure.com.au

Ausvigor Global, trading as Living Pure, strives to use the finest natural products grown or made in Australia.From what we eat to drink, what we do and who we spend time with, Living Pure is dedicated to helping improve the quality of our life, enabling the balance and harmony that a good life is all about.

Adam's Beverages Company Pty Ltd

8.1A3-02(22)

Address: 澳大利亚 Australia VIC 3004-Melbourne-448 St Kilda Road
Tel: +61499998999
Email: adam@adamsbeverages.co
Web:

Adam's Beverages Company Pty Ltd is the exclusive wholesales and distributor for JUST WATER Australia and Landin Estate Pty Ltd. We promote sustainable bottled water and beverages as well as Wine in Can products which is also recyclable.

Dr. Oetker Australia Pty Ltd

8.1A3-02(23)

Address: 澳大利亚 Australia QLD-Alderley-17-19 Wakefield Street
Tel: +61 (0)7 3513 4844
Email: nerida.lawrence@oetker.com.au
Web: www.taylorandcolledge.com

Taylor and Colledge is a global brand owned by Dr. Oetker GmbH. Founded in 1897 in Brisbane Australia, our Vanilla extracts, pastes and concentrates are used by chefs in Japan, Germany and the USA, as well as by mum's baking for their families. Our Vanilla is loved for its strength, quality and ability to make any recipe that extra bit special.

Nutrafruit Pty Ltd

8.1A3-02(24)

Address: 澳大利亚 Australia Queensland-Yeerongpilly-4/747 Fairfield Rd
Tel: +61 7 3217 1644
Email: lukec@nutrafruit.com.au
Web: www.nutrafruit.com.au

Nutrafruit is a Brisbane, Australia-based company that owns the global commercial license for the Queen Garnet, also known as QG-The Antioxidant PlumTM. The Queen Garnet has earned its spot in the list of superfoods, with several scientific studies finding an array of health benefits.

Z WINE PTY LTD

8.1A3-02(26)

Address: 澳大利亚 Australia South Australia-Tanunda-109-111 Murray Street
Tel: +61431255048
Email: export@zwine.com.au
Web: www.zwine.com.au

Z WINE is seriously dedicated to making some of Barossa Valley's best wine. Z is for ZERK, a pioneering Barossa settler family in 1846. Awarded as a 5 STAR JAMES HALLIDAY RATED WINERY & BEST WINERY OF REGIONS – BAROSSA VALLEY and CERTIFICATE OF EXCELLENCE (The Real Review 2018 & 2019) we have five different labels and over 20 highly awarded wines are available to explore.

DairyAustralia

8.1A3-02(26)

Address: 澳大利亚 Australia Victoria-Southbank-Level 3, HWT Tower, 40 City Road
Tel: +61396943764
Email: sarah.xu@dairyaustralia.com.au
Web: www.dairyaustralia.com.au

澳大利亚乳业局是澳大利亚乳业行业的服务性机构,代表澳大利亚所有的奶农,向乳业行业提供覆盖全产业链的服务,包括研发、市场推广和与行业相关的问题管理。澳大利亚乳业局与中国乳业行业长期合作,共同推进两国的乳品贸易和行业合作。

Dairy Australia is a service body for the Australian dairy industry, funded by dairy levies paid by dairy farmers. Dairy Australia's services cover the whole value chain of the dairy industry including R&D, market promotion and issues management. Dairy Australia has worked closely with the Chinese dairy industry for the development and trade of two industries.

Horticulture Innovation Australia

8.1A3-02(27)

Address: 澳大利亚 Australia NSW-North Sydney-Level 7, 141 Walker Street
Tel: +61404392311
Email: trade@horticulture.com.au
Web: www.horticulture.com.au

Hort Innovation is the research and development organisation for the Australian horticulture industry. We connect growers, buyers and consumers to drive demand for Australian fruit, vegetables and nuts across Asia. We have a solid reputation for supplying high-end products that are very safe and clean. China is our largest horticultural trading partner with annual exports around $835 million.

ZENITH AUSTRALIA INVESTMENT HOLDING PTY LTD

8.1A3-03

Address: 澳大利亚 Australia WA-WEST PERTH-15 ORD STREET
Tel: +61 8 93219379
Email: lli@zenithaustraliagroup.com
Web:

Zenith Investment Holding Pty Ltd is established in 2016 in Australia.
Zenith owns 8 properties in Western Australia. This portfolio consists of three main locations Kimberley, Marvel Loch and Goldfields. The total area of over 14,570km2, being a 34000 acre freehold farm Marvel Loch. The main operations being running cattle and cropping, as well as tourism operation at Mt Elizabeth.

Huanan Fishery (Samoa) C., Ltd.

8.1A3-04

Address: 萨摩亚 Samoa APIA-PO BOX 869 PAPASEEA ROAD, LOTOPA
Tel: 8675521513602
Email: shirley_wang@ltfv.com
Web:

Huanan Fishery (Samoa) Co., Ltd was established in 2016, We manage over 40 Tuna Longline vessels that produce in Southeast Pacific Islands around Samoa. Huanan Fishery (Samoa) Co., Ltd launches his Tuna Family series, which includes bigeye tuna, yellowfin tuna, albacore tuna, Spanish bluefin tuna, Japanese bluefin tuna, Australia bluefin tuna and more premium tuna products.

La encina seleccion S.L

8.1A3-05

Address: 西班牙 Barcelona-Barcelona-Ronda sant pere 72 Spain Barcelona-Barcelona-Ronda sant pere 72,Local
Tel: +34692464373
Email: mcz930423@gmail.com javier.meng@laencina.cn
Web: www.laencina.cn

La encina 是西班牙语 - 橡果树。橡果是高端伊比利亚黑猪生长过程中比必不可少的天然、健康的食物。我们以橡果树作为品牌名和Logo,意在表明公司致力于推广包括西班牙伊比利亚火腿、伊比利亚黑猪肉等西班牙优质健康的产品。公司目前是西班牙最具影响力的火腿经销商。公司仅选取西班牙最优质的西班牙产品带给中国的消费者。

In Spanish, the phrase "la encina" means acorn tree. As a precious, natural, healthy seed, the acorn is an indispensable part of the healthy diet for the beautiful, rare, and prized Iberian black pigs. Our company's namesake, La Encina, pays homage to this humble yet noble seed.

马达加斯加芒达有限公司 / Madagascar Manda S.A

8.1A3-06

Address: 马达加斯加 塔那那利佛-IVATO-LOT IA 90 BIS MANERINERINA Madagascar ANTANANARIVO-IVATO-LOT IA 90 BIS MANERINERINA
Tel: 0512-55371775
Email: 404133650@qq.com
Web: www.manda-sa.com

马达加斯加芒达有限公司,公司成立于2000年,公司主营渔业产品的捕捞养殖、收购加工、运输销售及进出口业务(注:根据马达加斯加政府规定,公司不经营鱼翅和海参),产品行销全球,年销售额超3000万美元。公司拥有各类海产品收购许可证45个,多个大型海产加工厂及3000吨冷库(现正扩建中)。依托丰富的水产资源,源源出新的优质产品和对产品质量的高要求、高标准,我们将海洋水产捕。

Madagascar Manda Co Ltd Established in 2000, mainly engaged in the fishing, transportation, import and export of fishery products.The products are sold worldwide exceed 30 million USD. Madagascar Epices Co Ltd is part of the world-famous vanilla exporter Bemiray Group of Madagascar, with the largest planting base in northeast Mada.

Salmones Multiexport S.A.

8.1A3-07

Address: 智利 Chile X Región-Puerto Montt-Cardonal 2501
Tel: 0086-21-58611999
Email: linghai2018@163.com
Web:

麦迪公司是智利最大的大西洋鲑和烟熏三文鱼的生产商，主要养殖大西洋鲑鱼和银鲑。产品出口至全球主要三文鱼市场。1983年公司成立，1989年开始养殖三文鱼,迄今已从事三文鱼行业30年,2013年，麦迪公司冰鲜三文鱼首次到达中国餐桌。2018年出口到中国的三文鱼超过7000吨，约占智利三文鱼出口量的35%。如今，中国成了麦迪最重要的市场之一。

The company is a Chile-based company primarily engaged in the aquaculture sector. The Company operates in one business segment, named Salmon and trout, which focuses on the cultivation, processing and distribution of the Atlantic salmon and trout. The Company provides frozen and smoked fish products, as well as mussels. The company's products are exported to over 30 countries.

BUFITO, C.A.

8.1A4-01(03)

Address: 委内瑞拉 Venezuela APURE-BIRUACA-AVENIDA PRINCIPAL, PARCELA 3
Tel: +58 212 9932254
Email: hscannone@bufito.com
Web: www.bufito.com

Food manufacturing and wholesaler company of buffalo milk caramel.

Alimentos la Yaya 0313, C.A.

8.1A4-01(10)

Address: 委内瑞拉 Venezuela Distrito Capital-Caracas-Av. Venezuela EDIF TORRE AMERICA PISO 10 OF 10-17 URB, BELLO MONTE
Tel: +58 212 762 4510
Email: mestreparra@hotmail.com
Web: www.alimentoslayaya.com

Condiments, sauces and vinegars.

Alimentos Amelie, C.A.

8.1A4-01(22)

Address: 委内瑞拉 Venezuela Distrito Capital-Caracas-Avenida Ferroquin Edif, 152 piso 3, oficina 12 la Candelaria
Tel: +58 212 5736167
Email: massielarantxa@gmail.com
Web: www.alimentosamelie.com

Exporting company of fruits and vegetables of the highest quality like lemon, avocado, mango, banana and more

JBS S/A

8.1A3-08

Address: 巴西 Brazil AV, Marginal Direita do Tiete 500, Vila Jaguara-CFP:05118-100, Sao Paulo-SP-Brazil
Tel: 55-11-31444000
Email: mei.zhang@jbs.com.br
Web:

With six decades of history, JBS is currently the largest protein processor and the second largest food company in the world. The Company operates in the processing of beef, pork, lamb, chicken and also produces value added and convenience food products. It also sells hides, toiletries and cleaning, collagen, metal packaging, biodiesel, among others.

GEDAYLACA

8.1A4-01(07)

Address: 委内瑞拉 Venezuela PORTUGUESA-GUANARE-CARRERA NACIONAL LOS GUAYOS, CC LOS INDUSTRIALES
Tel: +58 212 2619070
Email: jperea@grupogedaylaca.com
Web: www.grupogedaylaca.com

Venezuelan company that deals with the planting, harvesting, production, marketing and trade of products such as: cocoa, cocoa powder, cocoa butter, cocoa liqueur, protein and foodstuffs.

Complejo Industrial Licorero del Centro, C.A.

8.1A4-01(16)

Address: 委内瑞拉 Venezuela Miranda-Caracas-Calle Madrid, entre Trinidad y Mucuchies. Quinta Aurora NRO. 12-06 Urb. Las Mercedes
Tel: +58 416 6095457
Email: mdeabreu@alcoholesdelcaribe.com
Web:

Liquor production and marketing.

OCEANO DORADO, C.A.

8.1A4-01(23)

Address: 委内瑞拉 Venezuela Falcon-Punto Fijo-Galpon 1-1 N, Zona Franca de Paraguana
Tel: +58 269 2465160
Email: oceanodoradoca@gmail.com
Web: www.alimentos.com

FISH AND SHRIMP PROCESSING COMPANY.

Sociedad Mercantil Exportadora del Estado Bolivariano de Miranda, s.a.

8.1A4-01(02)

Address: 委内瑞拉 Venezuela Miranda-Los Teques-Avenida Bolivar, Edificio de la Governacion de Miranda, piso 2
Tel: +58 212 3213979
Email: mirandaexporta@gmail.com
Web:

Products cocoa, fish, coffee fruits, boots, non-metallic minerals through the marketing of these top quality products to be able to export satisfactorily to that market Cocoa and coffee products, fish, boots, non-metallic minerals, flowers.

Procesadora Avicola Tio Pollo, C.A. (Proatipollo)

8.1A4-01(09)

Address: 委内瑞拉 Venezuela Zulia-San Carlos del Zulia-Av. San Carlos, Sector Curva del Colon, San Carlos del Zulia
Tel: +58 414 7563338
Email: kiriaglarav@gmail.com
Web:

Breeds and fattens chickens for human consumption.

ALICORP, C.A.

8.1A4-01(17)

Address: 委内瑞拉 Venezuela Disrito Capital-Caracas-La Estancia Avenue, Tamanaco Shopping, Center, PB level, local 43-s-04, Chuao Urbanization
Tel: +58 9595837 / +58 212 9595837
Email: macosta@ronlaonza.com
Web:

Alcoholic beverages of excellent quality. The brands that we have are Doblon gold and silver.

Agropecuaria Insa de Venezuela Agroinsa C.A.

8.1A4-01(24)

Address: 委内瑞拉 Venezuela Anzoategui-El Tigre-AV INTERCOMUNAL EL TIGRE-SAN JOSE DE GUANIPA CENTRO COMERCIAL PASEO LOS PINOS PRIMER NIVEL OF 4-1-FM2-12, MODULO 4, SECTOR EL ROBLE,
Tel: +58 212 9592016
Email: agroinsaxp@gmail.com
Web: www.agroinsa-insa.com

PLANNING AND DEVELOPMENT OF AGRICULTURAL CROP PROJECTS, IMPORTING THEIR OWN RAW MATERIALS SUCH AS SEEDS, MACHINERY. MARKETING AND DISTRIBUTING THEIR AGRICULTURAL DEVELOPMENT PRODUCTS NATIONWIDE, BESIDES EXPORTING THEM TO ANY PART OF THE WORLD.

MATADERO MAELLA C.A.

8.1A4-01(25)

Address: 委内瑞拉 Venezuela MIRANDA-LOS TEQUES-CALLE CARCEL DE MUJERES ENTRE MERCADO Y URB. CECILIO ACOSTA LOCAL NRO 1 SECTOR SECTOR EL PASO
Tel: +58 414 4537897
Email: mechacin67@hotmail.com
Web:

Foods based on pork, chicken and beef.

Corporación Venezolana del Cafe, C.A. / Cafe Origen, C.A.

8.1A4-01(31)

Address: 委内瑞拉 Venezuela Lara-Barquisimeto-CTRA 7TMA ENTRE CALLE 1ERA Y CUARTA LOCAL GALPON NRO 200-2001 ZONA INDUSTRIAL 11, BARQUSIMETO
Tel: +58 212 2854447
Email: veamengual@gmail.com
Web:

Production and marketing of coffee.

CVA AZUCAR, S.A.

8.1A4-01(34)

Address: 委内瑞拉 Venezuela LARA-BARQUISIMETO-AV LARA EDIF PORCINOS DEL ALBA PISO S/N OF S/N URB SANTA ROSA
Tel: +58 251 2547855
Email: jl.cvaazucar@gmail.com
Web:

Production of sugar from sugar cane and marketing.

ALIMENTOS BOTALON, C.A.

8.1A4-01(37)

Address: 委内瑞拉 Venezuela PORTUGUESA-ARAURE-AVENIDA PROLONGACION AVENIDA 32 CALLE DE SERVICIO ZONA INDUSTRIAL CC CENTRO AGROINDUSTRIAL EL BOTALON NIVEL PB LOCAL GALPON # 4 Y 5 ZONA INSDUSTRIAL
Tel: +58 251 2550795
Email: idesa@botalon.net
Web: www.grupobotalon.net

COMMERCIALIZATION ROASTED COFFEE IN ROUGH AND ROASTED BEANS.

Agro Insumos El Granero C.A. / Agro Insumos El Granero, C.A.

8.1A4-01(26)

Address: 委内瑞拉 Distrito Capital-Caracas-Av. Orinoco con calle Mucuchies Torre Empresarial Premium, piso 1 oficina 1-2 y 1-5 Las Mercedes Venezuela Distrito Capital-Caracas-Av. Orinoco con calle Mucuchies, Torre Empresarial Premium, piso 1, oficina 1-2 y 1-5, Las Mercedes
Tel: +58 255 6239681 / +58 255 6239681
Email: info@agroinsumoselgranero.com
Web: www.agroinsumoselgranero.com

Exporters of bulk agricultural products such as chinese bean, black bean and rice. We also export by- products such as rice polish, chopped rice and corn germ. Agricultural products such as chinese bean, black bean and rice. We also export by- products such as rice polish, chopped rice and corn germ.

KKO COMERCIALIZADORA 2018 C.A. / KKO COMERCIALIZADORA 2018, C.A.

8.1A4-01(32)

Address: 委内瑞拉 Distrito Capital-Caracas-Av. Francisco de Miranda Torre Europa PB local OB 5 Campo Alegre Venezuela Distrito Capital-Caracas-Avenida Francisco de Miranda, Torre Europa, PB, local OB 5, Campo Alegre
Tel: +58 414 9200424
Email: aparrakko@gmail.com
Web:

We offer products derived from high quality cocoa, as well as cocoa beans type F1 and F2, guaranteed quality from the sowing process to the export of semi processed product like Cocoa Butter, Cocoa Podwer and Cocoa Liquor / paste.

Agricultura Mariana, S.A. (Agrimar) / Asoproco

8.1A4-01(38)

Address: 委内瑞拉 Venezuela Zulia-Maracaibo-Avenida 3E, entre calles 78 y 79. Torre Empresarial Claret. Piso 05. Oficina 05-01
Tel: +58 261 2011153
Email: esuarez@agrimar.com.ve
Web: www.agrimar.com.ve

Reproduction, rearing and fattening of shrimp larvae.

Suministros y Servicios Pronta, C.A.

8.1A4-01(27)

Address: 委内瑞拉 Venezuela Carabobo-Valencia-Calle 135, CC Galeria Los Sauces, Nivel 2, Urb. Los Sauces
Tel: +58 212 5763063
Email: protaexportfrutas@gmail.com
Web:

Products cocoa, fish, coffee fruits, boots, non-metallic minerals through the marketing of these top quality products to be able to export satisfactorily to that market.

CORPORACION SOCIALISTA DEL CACAO VENEZOLANO, S.A

8.1A4-01(33)

Address: 委内瑞拉 Venezuela Portuguesa-Acarigua-Urbanización Los Duriguas, sector 2, cuadra 42 casa n. 2
Tel: +58 234 6620858
Email: abg.oswaldoherrera@gmail.com
Web: www.cscv.gob.ve

Final products and sub-products derived from Cocoa susch as: Butter, cocoa powder, liquor sugary powder 70 %, dark and milk chocolate bars. All products made with Venezuelan Cocoa.

Valaq Acuicola, C.A. / GRUPO GRUCASA

8.1A4-01(41)

Address: 委内瑞拉 Venezuela Zulia-Maracaibo-Av. 148 w. Palito Blanco, # 68-160
Tel: +58 414 6364874
Email: asoprocozulia@gmail.com
Web: www.valaqacuicola.com

Producer and exporter of aquaculture products: Shrimp, crab, tilapia, among others.

INDUSTRIAS CHEPEL, C.A.

8.1A4-01(44)

Address: 委内瑞拉 Venezuela TRUJILLO-VALERA-AV. TAGLIAFERRO, LOCAL PARCELA 5A ZONA INDUSTRIAL CARMEN SANCHEZ DE JELAMBI, VALERA,
Tel: +58 271 2211612
Email: hoswaldo28@yahoo.es
Web: www.chepelca.com

WE CREATE WELLBEING THROUGH THE PRODUCTION OF PRODUCTS WITH 100% HIGH QUALITY VENEZUELAN RAW MATERIAL. PRODUCTS: POWDERED MIXTURE TO PREPARE JELLY/SUGAR POWDER/ MIXTURE POWDER TO PREPARE ATOL/FRUIT CONCENTRATE/ WHOLE WHEAT FLOUR/ POWDERED MIXTURE TO PREPARE BEVERAGES CHOCOLATE FLAVOR/ TOASTED CORN FLOUR/ OREGANO.

PROCAFE LARA, C.A.

8.1A4-01(47)

Address: 委内瑞拉 Venezuela Lara-Sanare-Calle 15 La Fe with local junin local galpon's S/N office n.1 sector Rancho Grande
Tel: +582512550795 ex5023
Email: idesa@botalon.net
Web: www.grupobotalon.com

Green Coffee Marketing.

中泰真空冷冻干燥有限公司 / SINO-THAI FREEZE&DRY CO., LTD.

8.1A4-03(03)

Address: 泰国 Thailand Bangkok-130 132 Sindhorn Blgd. Tower3 ,15th fl., Wireless Rd.,Lumpini,Patumwan Bangkok
Tel: +66-2-263-2991
Email: surasak.s@freezedry.co.th
Web: www.freezedry.co.th

泰国真空冷冻干燥有限公司非常注重生产的每个环节，按照国际安全质量标准生产出高品质产品，在合作国家法律法规的基础上，严格产品质量。从包装设计，研发产品以及可能造成消费者生命健康危害的项目进行食品安全的风险分析和危害分析。顾客可以100%放心食用我们的产品，每一个产品均通过食品安全认证，可以追溯到原生产地，从而保证客户满意我们的产品,对我们的产品充满信心。
Sino-Thai freeze and dry company limited, we are forzen and freezedry product manufacturer

CAPITAL TRADING CO.,LTD

8.1A4-03(06)

Address: 泰国 BANGKOK-12695 KRUNGTHONBURI RD.,BANGLUMPOOLANG, KLONGSARN Thailand BANGKOK-126/95 KRUNGTHONBURI RD.,BANGLUMPOOLANG, KLONGSARN
Tel: +6627484432
Email: cptexport1@stc-group.com
Web:

Capital Trading Co., Ltd. pioneer and develop snacks made from seaweed which is very popular in Thailand and overseas. Beside Thailand, now we expand our seaweed snack market to various countries in Asia, Europe, and USA under both own brand "SELECO", "IUMI" and OEM brand.

NATIONAL MEAT INSTITUTE (INAC) - URUGUAY

8.1A4-02

Address: 乌拉圭 Uruguay MONTEVIDEO-MONTEVIDEO-RINCON 545
Tel: +59829160430
Email: CSHAW@INAC.UY
Web: www.inac.uy

NON GOVERNEMNTAL PUBLIC BODY IN CHARGE OF THE RULLING, COORDINATION, ADVISING, QUALITY CONTROL, CERTIFICATION, RESEARCH AND PROMOTION OF URUGUAYAN NATURAL MEAT AND MEAT PRODUCTS. INAC IS A MEMBER OF THE IMS AND MICA. THE URUGUAYAN MEAT EXPORTERS THAT WILL CO-EXHIBIT IN OUR STAND ARE: LAS PIEDRAS, SAN JACINTO, MARFRIG, BPU-NH FOODS, PANDO, SIRSIL, MINERVA, LAS MORAS, FRIGOCERRO, BILACOR, ERSINAL.

猴王食品(泰国)有限公司 / MONKEY KING FOOD CO., LTD

8.1A4-03(04)

Address: 泰国 Thailand Bangkok-388/17-18 BIZ GALLERIA, NUANCHAN RD, NUANCHAN,BUENGKUM,
Tel: +66-2-946-0292
Email: mdoffice@mokifood.com
Web: www.mokifood.com

猴王食品(泰国)有限公司(MONKEY KING FOOD CO., LTD)成立于2005年，为泰国投资促进委员会(BOI)特别鼓励项目,现已发展成为一家集研发生产、销售为一体的健康食品企业，工厂设立于泰国巴吞塔尼府，占地面积为70000多平方米的现代化花园式工厂。
Monkey King Food is a Thai company. Registered in September 2005 with promotional privileges from the Board of Investment (BOI). The company manufactures healthy food for the local Thai and the global market. We offer OEM servcies.

T.K.K. CHANTHABURI FOODS CO., LTD.

8.1A4-03(07)

Address: 泰国 Thailand CHANTHABURI-MAKHAM-32/2 MOO 6, CHANTHABURI-SAKAEO ROAD,
Tel: +66-2-8494050
Email: supatip.sunfood@gmail.com
Web:

We are dehydrate, freeze dry manufacturer factory located in eastern of Thailand, Chanthaburi, one of the best fruits source in Thailand. We do supply many kind of fruits range whether in bulk packing or in retails package. Our main products which we supply is mostly dried mango, pineapple and durian.

EUROPEAN FOOD PUBLIC CO., LTD.

8.1A4-03(02)

Address: 泰国 Thailand Samutprakarn-291 Moo 10 Poochasamingprai Road, South Samrong, Prapradang,
Tel: +66-23843049
Email: Export_w@eurofood.co.th
Web: www.eurofood.co.th

We are the lending food and snack food manufacturers. With continuous effort in developing better products, quality raw material selection, strict quality control and latest packaging technology, we ensure that our products under the brand name "EURO" are best quality products that will bring smiles on the faces of our consumers and stand true to its' brand slogan, "Euro ,Quality of Smile".

PATTANASUP(2018) CO.,LTD.

8.1A4-03(05)

Address: 泰国 Thailand BANGKOK-295-7, YAOWARAJ RD. SAMPANTAWONG
Tel: +6622240077
Email: Pattanasup2018@gmail.com
Web: www.benabanana.com

We produce banana chips in 2 flavors; LAAB and Sourcream&Onion and more to come. Authentic Thai taste in combination with Thai fruit.

T.C. PHARMACEUTICAL INDUSTRIES CO., LTD.

8.1A4-03(08)

Address: 泰国 Thailand BANGKOK-288 EKACHAI ROAD, KHLONG BANG PHRAN SUB-DISTRICT, BANGBON DISTRICT
Tel: +6624150100
Email: panthira.sup@tcp.com
Web:

TCP is the leading Food and Beverage manufacturer and Global exporter based in Thailand, with a diverse product portfolio comprising 5 product categories, which are Energy drinks, Flavor Eletrolyte beverages, Functional drinks, Ready to drink tea and snacks.

FIRSTLAB INTERPRODUCTS CO.,LTD

8.1A4-03(09)

Address: 泰国 Thailand BANGKOK-1 SOI SUKSAWAT 33, INTERSECTION 7, RATBURANA
Tel: +6622359522
Email: h_nitichai@hotmail.com
Web:

Our company produce snack foods and cosmetic.

环球米业有限公司 / RICELAND FOODS LTD.

8.1A4-03(10)

Address: 泰国 曼谷-新沙吞大厦第33楼库吞武里路门牌77/140号 Thailand Bangkok-33rd Floor Sinn Sathorn Tower, 77/140 Krungthonburi Rd, Klongtonsai, Klongsan,
Tel: +66-889458009
Email: rice1@riceland.co.th
Web: www.riceland.co.th

环球米业有限公司，成立于1982年，以出口泰国优质大米为宗旨，几十年如一日。
代表产品为：泰国茉莉香米，一直以来备受中国消费者的热捧。为中国市场引进了新一代泰国明星产品：高端产品：有机茉莉香米，有机小米种系列；健康米种：红糙米，黑莓果米，黑糯米等。
Riceland Foods Ltd. as Thai rice exporter established in 1982, that export main product "Thai Hom Mali Rice" and we expand our product series as Health rice: Thai Riceberry, Thai Red Cargo Rice, premium product: Organic Thai Hom Mali Rice etc.

FCAA CASTLE BREWERY HOLDING GMBH

8.1A4-04(01)

Address: 德国 Germany Germany-Düsseldorf-Georg-Glock-Straße 8
Tel: 0411-83880684
Email: ds_beer@126.com
Web: auerbier.de

FCAA CASTLE BREWERY HOLDING GMBH is a food & beverages company based out of Germany.

FRANCE FORTRESS

8.1A4-04(04)

Address: 法国 France GIRONDE-VILLENAVE DE RIONS-CHATEAU LEZONGARS 324 ROUTE ROQUES NORD
Tel: +33556721806
Email: c.lin@francefortress.fr
Web: www.francefortress.fr

France Fortress, located in the well-known Bordeaux region, is a French corporate company specialized in wine producing and trading business. We own 3 vineyards producing each one of them gold-medal-winning wines with different characters: Vieux Chateau Landon (Medoc Cru Bourgeois), Chateau Lezongars, and Chateau de Lagorce.

TUFFIE FOOD AND MARKETING CO.,LTD

8.1A4-03(11)

Address: 泰国 Thailand BANGKOK-ROOM P1, LEVEL P, NO.1, GLAS HAUS BUILDING, SUKHUMVIT 25, SUKHUMVIT ROAD, NORTH KLONGTOEY, WATTANA
Tel: +66624651953
Email: phapatsarin.j@tuffie.co
Web:

TUFFIE is aiming to present Thai cuisine a through our products on the global stage and build a healthy relationship with our partners across the world.

New Zealand New Lamb Holdings Limited

8.1A4-04(02)

Address: 新西兰 New Zealand Auckland-Auckland-Level 26, PwC Tower, 188 Quay Street
Tel: +6421373137
Email: nancy@nzfinefoods.com
Web:

We are a New Zealand registered company specialised in export of high quality and scarce products made in New Zealand.

Pinnacle Fine Foods / Australia Aulong Auniu Wang Pty Ltd

8.1A4-04(05)

Address: 澳大利亚 Australia NSW-Sydney-Level 15 227 Elizabeth Street
Tel: +8618645179381
Email: aliu@pinnaclefinefoods.com.au
Web: www.pinnaclefinefoods.com.au

We are a leading Australian premium food producer, providing our discerning customers with the finest products, grown in pristine places by passionate farmers.
Our vision is to be Australia's premium fine food producer.
Our mission is to produce, supply and deliver consistent high-quality Australian food, providing consumers from all over the world with unique food experiences.

FRIENDSHIP CO.,LTD

8.1A4-03(12)

Address: 泰国 Thailand BANGKOK-6/1 PRAMUAN, SILOM ROAD
Tel: +6626352700
Email: vararat.j@hotmail.com
Web: www.hanami.com

Production and distribution of snack.

HONGKONG FCAA TRADING CO., LIMITED

8.1A4-04(03)

Address: 香港地区 HongKong China HONGKONG
Tel: 041183880758
Email: guojigongsi2019@163.com
Web:

Founded in 2011, Hong Kong FCAA Trading Limited is committed to the import and export business of red wine and beef with its advantageous geographical location and open free trade port policy, and the annual quantity of wine is about 500,000 bottles.
Our company mainly import wine from the France Fortress, a company in France, and beef from the Australia Aulong Auniu Wang, a company in Australia.

Mpundu Wild Honey Ltd

8.1A5-01

Address: 赞比亚 Zambia Central Province-Kabwe-Plot No.5216 Mine Plant
Tel: 021-61809208
Email: 793478984@qq.com
Web:

Established in 2015, Mpundu Wild Honey Ltd. is located in Kabwe, the capital of Zambia's Central Province. It is a company integrating beekeeping, processing and marketing. The company has a set of food safety control measures to ensure food safety, hygiene and quality.

GREECHAIN INTERNATIONAL KENYA LIMITED

8.1A5-02

Address: 肯尼亚 Kenya Nairobi-Westlands District-FCB Mihrab,Lenana Road
Tel: 021-31787014
Email: suny.sun@greechain.com
Web: www.greechain.com

果锐科技-让世界重新认识非洲，我们通过跨境电商的模式，严选非洲最具World Class级品质的产品直供给中国及周边市场，并通过与非洲国家产业和行业协会、品牌供应商、政府部门全面而深入的合作模式，借助完备的非洲供应链体系，打造“一带一路”沿线国家最具市场竞争力的跨境进口供应链。GREECHAIN is based on cross-border electronic commerce,selects World Class products of Africa and supplies such products directly to China and neighboring markets, to create a cross-border import supply chain with the most prominent market competitiveness among countries along "the Belt and Road".

Wosune International Inc.

8.1A5-05

Address: 美国 United States of America CA-LA-19295 Walnut Drive Suite G, City of Industry
Tel: +86 532 82499986 / +1(626)581-8699
Email: fish.yang@matsumotofoods.com
david@wosune.com
Web: www.wosune.com

Wosune International Inc. is an American trading company located in the City of Industry, California. Wosune International Inc. specializes in high quality dried ingredients and snacks that are consumed all over the world. Our products include dried Frutis,Nuts other food ingredients.

Tequila Orendain de Jalisco S.A. de C.V.

8.1A5-07(03)

Address: 墨西哥 Mexico Jalisco-Tequila-Tabasco No. 208 Colonia Centro
Tel: 33 3777 1818
Email: morendain@casaorendain.com
Web: www.casaorendain.com

The Orendain name is distinguished among the most famous Tequila destillers, a family with Tequila tradition distilling since 1840, today, the family operates La Mexicana Distillery, built in 1962. We offer Tequila 100% agave, Tequila and liquors.

BRUNA OPERADORA DE ALIMENTOS

8.1A5-07(09)

Address: 墨西哥 Mexico Jalisco-Guadalajara-Lerdo de Tejada 2418
Tel: 3336 3099 56
Email: luis@bruna.com.mx
Web: www.bruna.com.mx

Distributor.

新溪岛蜂蜜集团 / Streamland Honey Group Limited

8.1A5-03

Address: 新西兰 New Zealand Auckland-604 Great South Rd,Ellerslie
Tel: +64 96006105
Email: zoe.li@nzstreamland.com
Web: www.nzstreamland.com

Making Streamland natural products is both an art and a science. However, the real hero in everything we do is Mother Nature. A large part of our job is packaging her work for our customers with as little interference as possible. It's the only way to ensure the qualities of our unique products reach customers in their purest form.

Mission Produce, Inc. / Mission Produce,Inc

8.1A5-06

Address: 美国 United States of America
Tel: 18706263163
Email: wei.yingfang@mr-avocado.com
Web: www.mr-avocado.com

牛油果先生Mr.Avocado,是一家拥有领先国际的牛油果催熟技术和完整分销体系的合资公司，致力打造中国首个技术领先、设备齐全、链条完整的牛油果催熟库，专注于整个牛油果产业链的发展。拥有中国第一且唯一一个专业牛油果催熟中心。
Mr.Avocado, with internationally leading Avocado ripening technology, is committed to building the first Avocado ripening room with leading technology, complete equipment and complete chain in China, focusing on the development of the whole Avocado industrial chain.

Urbanss Coffee

8.1A5-07(04)

Address: 墨西哥 Mexico Jalisco-Zapopan-Enrique Ladron de guevara Av. 1497 - 03
Tel: 33 1578 6791
Email: urbansscoffee@gmail.com
Web: www.esurbansscoffee.com

Urbanss Coffee selects the best coffee beans from Jalisco and Mexico. Our coffee is a genuine 100% of height, it has the acidity of the Mexican Pacific Volcane Zone; Urbanss Coffee is arabic coffee, with notes of maple, almond and chocolate, agro-ecological and artisanal. We were on Foodex Japan 2019; Expo Café Gourment 2019

FONG YUAN INTERNATIONAL (THAILAND) CO.,LTD.

8.1A5-04

Address: 泰国 Bangkok -Wattana-8/28 Prasanmit Condominium Sukhumvit 23, Klongtoey-nue,Wattana,Bangkok 10110 Thailand Bangkok -Wattana-8/28 Prasanmit Condominium Sukhumvit 23, Klongtoey-nue,10110
Tel: 17328667707
Email: 282584787@qq.com
Web:

Which specializes in fruit import and export. Relying on global based procurement and leading by brand terminal sales and services, we continuously optimize the supply chain management which integrates fruit planting, processing, logistics, cold chain, sales and services., focus on providing the freshest fruits of the market, and devote ourselves to improving quality of human life.

Berries Fam & Co S.P.R. de R.L. de C.V.

8.1A5-07(02)

Address: 墨西哥 Mexico Jalisco-Tlajomulco de Zúñiga-Camino de alazan no. 9 colonia San Martin del Tajo
Tel: 3334734788
Email: victorito_21@hotmail.com
Web:

We produce and commercialize avocado and berries.

Mega Foods de Obeso S.A. DE C.V.

8.1A5-07(05)

Address: 墨西哥 Mexico Jalisco-Guadalajara-Montevideo 3057
Tel: 52 1 0133 3333 2476
Email: alonsoceo@grydas.com
Web: www.grydas.com

Smart foods, super foods and functional foods.

Aeromexico

8.1A5-07(08)

Address: 墨西哥 Mexico Alcaldía Cuauhtémoc -Mexico City-Paseo de la Reforma 243, Col. Cuauhtémoc
Tel: 91324994
Email: alcruzh@aeromexico.com
Web: www.aeromexico.com

Mexico's flagship airline and the leader in Latin American aviation. We have over 16,000 associates around the world who help us serve the more than 600 daily flights we operate to 93 destinations in three continents, with a fleet including more than 130 aircrafts that are 8 years old, on average.

Productos Uvaviña S.A. de C.V. / Vainilla Molina

8.1A5-07(10)

Address: 墨西哥 Mexico Jalisco-Zapopan-1140 Carlos L. Gracidas
Tel: 52 33 3628 4362
Email: hherrera@vainillamolina.com
Web: en.vainillamolina.com

A blend of natural vanilla extract and artificial flavours creates the perfect combination to optimize flavour, conserving the qualitites of the pure vanilla extract.

AARDBEI S. DE R.L. DE C.V.

8.1A5-07(13)

Address: 墨西哥 Mexico Jalisco-Tlaquepaque -Hacienda Amatitan 66 Hacienda de Vidrios
Tel: 33 4040 9227
Email: alvaro@mextf.com
Web: www.mextf.com

We source, import and export a variety of primary food products, focusing on nuts and dried fruits.

ONAVSA S. DE R.L. DE C.V. / Huevo y Chia Navarro (ONAVSA)

8.1A5-07(16)

Address: 墨西哥 Mexico Jalisco-Tepatitlan -Avicultores 71
Tel: 52 1 378 782 3878
Email: huevoychia@gmail.com
Web:

We stand as a company based in Tepatitlan, Jalisco, Mexico. Specialized in producing, processing and distributing premium mexican organic chia seeds to international market.

Nature Selekt Export

8.1A5-07(19)

Address: 墨西哥 Mexico Queretaro-Queretaro-Floor, 11, Central Park, Centro Sur
Tel: 4424788585
Email: natureselekt@gmail.com
Web: www.natureselekt.com

We can supply natural food from Mexico with high quality and good price.

Vida Yang

8.1A5-07(11)

Address: 墨西哥 Mexico Jalisco-Zapopan-Volcan Jorullo 5057
Tel: 3573865629
Email: rosa.medina@vidayang.com
Web: vidayang.com

The company was founded in 2012 as a "spin-off" of a family agricultural business to add value to the agricultural products they have produced for more than 30 years. Its main focus is to develop products with scientific support.

Pablo Ingacio Michel Ontiveros

8.1A5-07(14)

Address: 墨西哥 Mexico Jalisco-Guadalajara-Andres Quintana Roo 1611 Col. Guadalupana
Tel: 52 33 3585 5555
Email: alejandro.rivera@michel.com.mx
Web: www.grupomichel.com.mx

Grupo Michel is a visionary and dinamic company that has expanded its horizons multiple business divisons in order to exploit the commercial opportunities that are presented. Grupo Michel likes the great challenges and faces them always with the same philosophy; that is with high trained personnel and the most advanced technology.

Diricom S.A. de C.V.

8.1A5-07(17)

Address: 墨西哥 Mexico Mexico City-Mexico City-Av Stim no. 97-4 Colonia Lomas del Chamizal
Tel: 52 55 5596 0989
Email: edr@diricom.com.mx
Web: www.ahuacatlan.com.mx

Ahuacatlan is a 100% mexican product, made with the highest quality standards, that has succesfully entered in international markets.

Carlos Manuel Becerra Guerrero / Higos

8.1A5-07(20)

Address: 墨西哥 Mexico Jalisco-Poncitlán -16 de Septiembre #111
Tel: 01 (391) 92 10001
Email: figs.mexgroup@gmail.com
Web: figsmex.com

Company producing the field venturing into the cultivation of fresh fig and its derivatives.

Balletero Industrial Group S.A. DE C.V. / Avogratto

8.1A5-07(12)

Address: 墨西哥 Mexico Jalisco-Guadalajara-Aureliano Gonzalez 1937, Jardines Alcalde
Tel: 33 14 87 26 79
Email: lortiz@avogratto.com
Web: avogratto.com

The company was born in 2013, dedicated to the production of hass avocado and avocado oil. Today we are recognised nationally and internationally as a little brand that offers quality, great serivces and health benefits in the production of gourmet food for mexican cuisine.

Inulina y Miel de Agave S.A DE C.V.

8.1A5-07(15)

Address: 墨西哥 Mexico Jalisco -Capilla De Guadalupe -Carretera Tepatitlan - Arandas km 4.5
Tel: 52 1 378 7010 112
Email: rodolfo@preventy.com
Web: imagorganics.com

IMAG is a 100% mexican company dedicated to the elaboration of products derived from agave, such as agave syrup and agave inuline, with an annual production of 10,000 tons of syrup and 6,000 tons of inuline, we are the only vertically integrated company since we control our processes from the cultivation of agave in our more than 5,000 hectares to the final product, guaranteeing products.

Grupo Industrial Vida

8.1A5-07(18)

Address: 墨西哥 Mexico Jalisco-Zapopan -Ejido 300, La Venta del Astillero
Tel: 33 18 48 07 08
Email: diego.miranda@grupovida.com
Web: www.grupovida.com

Biggest oat manufacturer in LatAm.

Aromáticos Químicos Potosinos, S.A. de C.V.

8.1A5-07(21)

Address: 墨西哥 Mexico Jalisco-Zapopan-Circunvalación Ote. No. 225
Tel: 523 33 777 4240
Email: logistics@grupotecnaal.com.mx
Web: www.grupotecnaal.com.mx

Grupo Tecnaal is an innovative company whose core business is based on the production of natural identical, W.O.N.F. and natural specialities ingredients for food, beverage, nutrtion, halal food chemical codex, E.O.A. ISO: 9001: 2015 Product lines: spice essential oils/ citrus essential oils / natural extracts/ oleoresins/ powder products.

SESAJAL S.A. de C.V.

8.1A5-07(22)

Address: 墨西哥 Mexico Jalisco -Guadalajara-Calle 22 no. 2332
Tel: 3331 34 34 70
Email: aalaniz@sesajal.com
Web: sesajal.com

We are a company with 30 years in the market that is integrated from the fields to the customer, and it is focused on the international market. Our main products are sesame seed (seeds, oil, tahini,) chia and avocado oil.

INDUSTRIAS GUACAMAYA, S.A de C.V

8.1A5-07(23)

Address: 墨西哥 Mexico Carretera a Navolato #9105 pte
Tel: (667)7600045
Email: Gerente.general@laguacamaya.com
Web: www.laguacamaya.com

Industries Guacamaya is a company with more than 200 employees, in different states of Mexico, and with several distribution points in the United States. - SAUCES, SPICES AND CONDIMENTS.

Mexican Beef

8.1A5-07(25)

Address: 墨西哥 Mexico Mexico City -Mexico City -Yacatas 484
Tel: 55 56 39 30 76
Email: rperez@mexicanbeef.org
Web: www.mexicanbeef.org

Mexican Beef Exporters Association is a nonprofit organization comprised of mexican producers, distributors and exporters companies focused on beef exports. Our goal is to promote, increase and procure exports of Mexican beef with the best attributes, flavour, hygiene and food safety.

Acuacom

8.1A5-07(32)

Address: 墨西哥 Mexico Sinaloa-Culiacán-Fray Marcos de Niza 3030, San Rafael
Tel: 6674011749
Email: cristina@acuacom.com
Web: www.acuacom.com

We are a company founded in Sinaloa dedicated to the fish market industry.

Marba Foods S.A. DE C.V.

8.1A5-07(33)

Address: 墨西哥 Mexico Sinaloa -Culiacan -Av. Canal Sjub Lateral 3+100 #2603 Norte Localidad Bellavista
Tel: 66 72 61 70 60
Email: grupo_marba@hotmail.com
Web: www.casamartinez.com

Casa Martínez rests on a foundation of the rich culinary traditions and ancient recipes from out mexican heritage, our salsas are expertly crafted from fresh and flavourful ingredients to create extraordinary varieties that will enhance.

SuKarne

8.1A5-07(34)

Address: 墨西哥 Mexico Sinaloa-Culiacan-Av Diana Tang 59A, Desarrollo Urbano La Primavera
Tel: 852 6793 5093
Email: dimas.borhausen@sukarne.com
Web: www.sukarne.com

The biggest Mexican beef producer, the 5th biggest in the Americas providing higher quality meat to Asia. Grain-fed; 180 days as an average. With international presence being the export leader from Mexico selling its beef meat to some of world's premium markets such as USA, Japan, South Korea and other countries.

TECONICHIS

8.1A5-07(35)

Address: 墨西哥 Mexico Chihuahua-Buenaventura-Carretera casas grandes km. 3.5
Tel: 915 216 8405
Email: i.plasencia@teconichis.com.mx
Web: www.teconichis.com.mx

Ground red peppers ready to use as the base ingredient for mexican dishes as menudo, pozole and enchiladas.

Agropecuaria Bermudez S.P.R. DE R.L. DE C.V

8.1A5-07(36)

Address: 墨西哥 Mexico Chihuahua -Delicias-Av. 9a Pte. No. 604
Tel: 639 474 2850
Email: celinac@agrobesa.com
Web: www.agrobesa.com

Purchase and sales of agricultural products.

Delia Corral Talavera / Global Enterprises SA de CV

8.1A5-07(37)

Address: 墨西哥 Mexico Chihuahua -Juarez-2701 7E Tecnologico, El Marquez
Tel: 614 414 3828
Email: ventas@churrotime.mx
Web: www.churrotime.mx

Impulse product for sale in places of high traffic of people.

Miel Norteña S. DE R.L. DE C.V.

8.1A5-07(38)

Address: 墨西哥 Mexico Chihuahua -Cuauhtemoc -5 de mayo
Tel: 6255812828
Email: mielnortena@msn.com
Web: mielnortena.com

A company specialized in the production of honey and pollinitation service committed to society, support the conversation of natural resources, strengthen the ecology and sustainability of this activity, to be referring day by day new technologies.

Mezcalez de Calidad Don Aurelio Lamas S.A. DE C.V.

8.1A5-07(39)

Address: 墨西哥 Mexico Zacatecas -Teul de Gonzalez ortega -Mexico SN
Tel: 01 467 952 7745
Email: mezcalesdecalidad@hotmail.com
Web: mezcaldonaurelio.com

A company that preserves the traditional way of making mezcal with a unique care and worrying about the quality of its product. The young mezcal is elaborated resting among others.

Operadora Regias del Centro SAPI DE CV

8.1A5-07(40)

Address: 墨西哥 Mexico Zacatecas -Fresnillo -Cto Fresnillo Nte 4
Tel: 49 39 32 07 17
Email: gerardosantillan@prodigy.net.mx
Web: tortillasregias.com.mx

Tortilla chips elaborated with grain whole of corn.

CHILZA

8.1A5-07(41)

Address: 墨西哥 Zacatecas -Morelos -Concepción del Oro KM1 Mexico Zacatecas -Morelos -Concepcion del Oro KM1
Tel: 492 9245210
Email: hector.jaramillo@gmail.com
Web: www.chilza.com

We area company that is dedicated to the production and processing of food products.

Procesadora de la Costa del Pacífico / PROCOP

8.1A5-07(42)

Address: 墨西哥 Mexico Sinaloa-Culiacan-Dren Bacurimi #58, Bacurimi
Tel: 667 2863211
Email: congeladora.bacurimi@gmail.com
Web: www.procopa.com

We are a company dedicated to make and market marine products mainly shrimp, for this process we have an experience and professionalism of a qualified work team with which we can offer our customers the best service, safety and quality.

FOPLAM S.A. DE C.V.

8.1A5-07(43)

Address: 墨西哥 Mexico Mexico City-Mexico City-Zamora 165 Col. Condesa
Tel: 55 55 01 21 28
Email: admon@foplam.com
Web: foplam.com

Foplam is a company dedicated to the export of materials from plastic waste, baled, flakes, washed flakes and repro. The company is established in Mexico but it has presence in more than 5 asian countries, where they commercialize most of its goods.

SBE CONSUULTING

8.1A5-07(44)

Address: 墨西哥 Mexico Mexico City -Mexico City -Iztaccihuatl 74
Tel: 52 1 4777545620
Email: itorres@sbeintl.com
Web: sbeconsulting.com.mx

SBE is an international firm with more that 15 years of performing quality assurance and quality control services positioning as a global leader with more than 10 offices worldwide and a significant presence in Asia.

Pescados Industrializados S.A. de C.V.

8.1A5-07(45)

Address: 墨西哥 Mexico Sinaloa-Mazatlán-Puerto de Mazatlán Avenue 406-A
Tel: 669 9825210
Email: ggarcia@pinsa.com
Web: www.pinsa.com

PINSA produces canned tuna and pouch tuna (tuna in oil, water, tuna salads with vegetables in different net weights.)

Acuícola Melania S.A. de C.V.

8.1A5-07(46)

Address: 墨西哥 Mexico Sinaloa-Culiacan-Circuito interior 4 no. 6910-08 colonia Estancia 2
Tel: 6677142704
Email: acuicolamelanie@gmailcom
Web:

Mexican company specialized on farmed shrimp production. Located in Navolato Sinaloa, Mexico. We've been producing farmed shrimp since 1992, the company is still growing strong.

Acuícola Los Ángeles S.A. de C.V. / Acuicola Los Angeles

8.1A5-07(47)

Address: 墨西哥 Sinaloa-Culiacan-Río Casas grandes 977, colonia morelos Mexico Sinaloa-Culiacan-Rio casas grandes 977, colonia Morelos
Tel: 6677517900
Email: emv756@gmail.com
Web:

We are a company founded in Sinaloa dedicated to the fish market industry.

Golden Maya

8.1A5-07(48)

Address: 墨西哥 Mexico Mexico City -Mexico City -Camino a Santa Teresa #1313, Jardínes del Pedregal, Álvaro Obregón
Tel: 55 52 13 83 47
Email: bernardo.av@thegoldenmaya.com
Web: www.thegoldenmaya.com

We are proud to be able to call upon reliable and professional partners who provide an excellent quality service and competitive prices. Our extensive networking throughout the region gives our visitors access to experienced well- qualified specialists.

Alcoholera de Zapopan S.A. de C.V. / Vinos y Destilados del Golfo (Alcoholera de Zapopan)

8.1A5-07(49)

Address: 墨西哥 Mexico Jalisco-Zapopan-Vicente Guerrero 295 Colonia Agua Blanca industrial
Tel: 52 3684 3618
Email: salromero@alcozap.com
Web:

Company dedicated to the productrion of sugar cane in order to be later used as raw material in the productrion of our ethyl alcohol and spirits.

Winbridge Business Group

8.1A5-07(50)

Address: 墨西哥 Mexico Baja California-Tijuana-Jose Clemente Orozco 1409 Zona Urbana Rio, Tijuana B.C
Tel: 6643872035
Email: arturo@winbridge.mx
Web: www.winbridge.mx

Winbridge is a business plataform. We provide legal, financial and business consulting for companies that want to thrive within Mexico and the Latin American Market.

Mexiconexión al Mundo

8.1A5-07(51)

Address: 墨西哥 Mexico Jalisco-Guadalajara-Lazaro Cardenas 3454-6 Col. Jardines de Chapalita
Tel: 523335607899
Email: m.hernandez@mexiconexion.mx
Web: mexiconexion.mx

Mexiconexion is the fastest facilitator of inbound investment into México and LATAM.
We specialize in removing obstacles and reducing time involved in building mutually beneficial relationships with the most sought after, strategically effective clients and partners around the world.

Asociacion Agricola de Productores de Platano del Soconusco

8.1A5-07(53)

Address: 墨西哥 Mexico Chiapas-Tapachula-17c. Calle Oriente #57, Colonia Centro
Tel: 962 62 64013
Email: aappseerenciat@hotmail.com
Web: :platanerosoconusco.com

We're a banana producers organization based on the Soconusco region in the State of Chiapas, which goes from Acapetahua to Suchiate. We're experts on the banana production and sales in the national and international market. We have a team expert on topics like production, quality, logistics, documentation, commercialization and fruit exports.

Degomich S de RL de CV

8.1A5-07(54)

Address: 墨西哥 Mexico Michoacan-Sahuayo-Gustavo Diaz Ordaz #449 col J Trinidad Barragan
Tel: 5527623310
Email: degollado_77@hotmail.com
Web:

Dikeroil avocado oil is an extra-virgin and organic coconut oil. It is done with a selection of the highest quality coconuts processed naturally and cold pressed to achieve a pure and 100% natural product at a fair price.

Urapa Produce SA de CV

8.1A5-07(55)

Address: 墨西哥 Mexico Michoacan-Morelia-Agua de Rio No.100 Colonia Rincon de Agua Clara
Tel: 524436880052
Email: orlando.valenciaa@gmail.com
Web: urapaproduce.com

Fresh avocados

PRONUA SA DE CV

8.1A5-07(56)

Address: 墨西哥 Mexico JALISCO-Guadalajara-BLVD JOSE GUADALUPE ZUNO 52 A
Tel: 3336332043
Email: CARLOS@LOSBELENES.COM.MX
Web: www.losbelenes.com.mx

PRONUA, SA de CV, was born in 1974 in Jalisco selling livestock feed, with the passage of time and experience in animal nutrition, also ventures into the segment of food for fish and pets. - FISH AND PET FOOD.

Agroindustria Guadalajara SA DE CV

8.1A5-07(57)

Address: 墨西哥 Mexico Jalisco-Capilla de Guadalupe-Rancho el Herradero 100
Tel: 523787121515
Email: alemontes@hotmail.com
Web: www.aigtequila.com

We are a Tequila producer company located in Los Alots de Jalisco Mexico. Our goal and mission is to offer the best product in the markte, but also to offer quality and price in all our products.

Zentralverband der Deutschen Geflügelwirtschaft e.V. (ZDG)

8.1B1-01(01)

Address: 德国 Germany Berlin-Berlin-Claire-Waldoff-Str. 7
Tel: +49 30 288831-30
Email: export@zdg-online.de
Web: www.zdg-online.de

The ZDG is the sole representative body for the German poultry industry and lobbies for policies on behalf of the entire sector at the German, EU and international levels. It has nearly 8,000 members spanning the entire chain of poultry meat production: internationally-active breeding companies, hatcheries, agriculturally-structured rearing farms, poultry slaughterhouses and marketers are all repr.

stick & lembke GmbH

8.1B1-01(03)

Address: 德国 Hamburg-20457 Hamburg-Am Windhukkai 5 Germany 20457 Hamburg-Am Windhukkai 5
Tel: +49 40311823895 / +49 40 311823895
Email: klockmann@stick-lembke.de
Web: www.stick-lembke.de

We produce organic tea and organic herbal/ fruit infusions without any additives:
• always without flavours
• always without additives
• always organic •always vegan
• transparency and fairness until the origin
• sustainable and exceptional packages
• Premium tea made in Hamburg, Germany

IEC Inter Expo Consult GmbH & Co.KG

8.1B1-01(05)

Address: 德国 Germany Berlin-Torstr. 124
Tel: +49 30 28 39 39 0
Email: mail@iecberlin.de
Web: www.iecberlin.de

Official German Presentation on behalf of the Federal Ministry of Food and Agriculture Federal Ministry of Food and Agriculture BMEL Rochusstr. 1, D-53123 Bonn.
Email: messen@bmel.bund.de
www.bmel.de

FUERSTEN REFORM

8.1B1-01(06)

Address: 德国 LOTHER SAXONY-BRAUNSCHWEIG-AM SALGENHOLZ 2 Germany LOWER SAXONY-BRAUNSCHWEIG-AM SALGENHOLZ 2
Tel: 0049 4532 409209
Email: oliver.quast@langnese-honig.de
Web: www.langnese-honey.com

琅尼斯品牌拥有丰富多样的蜂蜜产品，是德国蜂蜜市场的领航者，也是全球最畅销的蜂蜜品牌之一。我们高品质的产品包括琅尼斯天然多花种蜂蜜、琅尼斯天然刺槐蜂蜜、琅尼斯天然森林蜂蜜、琅尼斯天然黑森林蜂蜜、琅尼斯天然蜂王浆蜂蜜饮品以及琅尼斯天然麦卢卡黑森林蜂蜜等。

Langnese Honey with a wide range of honeys is leader on the German honey market and it is one of the best selling honey world-wide. Our high quality honey range includes Golden Clear honey , Acacia Honey, Forest honey , Black Forest Honey, Royal Jelly in Mountain flower honey , Manuka with Black Forest Honey and many more.

German Meat GmbH

8.1B1-01(07)

Address: 德国 NRW-Bonn-Adenauerallee 118 Germany NRW-53113 Bonn-Adenauerallee 118
Tel: +49 228 97144980
Email: info@german-meat.org
Web: www.german-meat.org

German Meat is the joint export promotion organisation of the German meat industry. German Meat groups together companies and organisations from all levels of meat processing. The aim of German Meat is to promote the export of products made by the German meat industry.

J.G.Niederegger GmbH & Co.KG

8.1B1-01(08)

Address: 德国 Germany Schleswig Holstein-Lübeck-Zeißstrasse 1-7
Tel: +49 451 53010
Email: info@niederegger.de
Web: www.niederegger.de

Since 1806 the company produces high quality Niederegger marzipan in Luebeck, Germany. The brand stands for finest craftsmanship created from passion.The strict selection of ingredients, their very careful processing and a keen sense for delicious innovations make Niederegger Marzipan an unparalleled experience of taste.

德配食品有限公司 / Dried Ingredients GmbH

8.1B1-01(09)

Address: 德国 汉堡-Hamburg -Am Windhukkai 5 Germany Hamburg -Am Windhukkai 5
Tel: 13062713767
Email: enjoy_929@hotmail.com simon.Xu@dried-ingredients.de
Web: www.dried-ingredients.de

德国工艺，世界好茶！Dried Ingredients Int GmbH 德配食品有限公司。欧洲领先的拼配花茶研发和定制生产公司；位于德国汉堡的集团总部是德国茶叶行业协会发起单位，闻名于其百年的经验在 茶，水果，草本，香辛料 方面的研究与探索，专注于德国花果茶，花草茶，拼配茶，调味茶的研发与拼配。我们奉行：德国工艺，世界好茶！开放交流，合作共赢！让健康花草茶服务人民美好生活。
选择德配花果茶，打造专属于您自己品牌的定制茶！
Dried Ingredients Int GmbH is famous for the development and production of Fruit- & Herbal-Infusions, as well as for flavored teas.
Their headquarter is located in Hamburg/ Germany which itself is famous in the history of the trade with tea, fruits, herbs and spices for hundreds of years .
We offer special fruit & herbal tea for your brand.

德国罗曼霍夫酒庄 / Roemerhof Weinhaus GmbH

8.1B1-01(12)

Address: 德国 Germany Trittenheim-Moselweinstr. 70
Tel: +49650792620
Email: roemerhof@roemerhof-weinkellerei.com
Web: www.roemerhof-weinkellerei.de

德国罗曼霍夫酒庄总部位于世界最著名的雷司令葡萄酒产区莫泽尔。酒庄葡萄园的历史可以追溯到古罗马时期，也就是距今2000年以前。而酒庄庄主艾菲尔先生的家族从1642年开始拥有和经营这些葡萄园。在莫泽尔，酒庄拥有世界最好的雷司令酒园：日晷园，奇药园，天堂园，欢浴园，主牧园和古弓园。
We are located in the most famous Riesling growing area-Mosel. The vineyard could be traced back to ancient Roman empire, more than 2000 years ago. The Eifel family has owned and operated the vineyard since 1642. We have the best Riesling vineyard in the world, such as Wehlener Sonnenuhr, Trittenheimer Apotheke, Graacher Himmelreich, Bernkasteler Badstube and Graacher Dompost.

HEIDEMARK GMBH

8.1B1-01(15)

Address: 德国 Germany Lower Saxony-Ahlhorn-Lether Gewerbestraße 2
Tel: +49 4435 9730 0
Email: heidemark@heidemark.de
Web: www.heidemark.de

Heidemark is the leading provider of turkey meat products in Europe and runs one of the largest turkey processing plants in the world. The concept of success is tightly integrated into a vertically integrated value chain that empowers a most efficient production process from parent stock farms and hatcheries up to the slaughtering, packaging and delivering of the final product to the customer.

FLORAPHARM Pflanzliche Naturprodukte GmbH

8.1B1-01(10)

Address: 德国 巴伐利亚-Schesslitz-Am steinernen Kreuz 7, D-96110 Germany Bavaria-Schesslitz-Am steinernen Kreuz 7, D-96110
Tel: 86-572-2114388
Email: stellawcy@163.com
Web: www.florapharm.de

Florapharm重新定义了什么是茶!
凭借优质的原料、创新的配方和不断追求独特性的需求，我们每天都在研发新口味的水果茶、花草茶、调味茶等。欢迎品尝我们不同口味的茶，探索我们特色的香味茶饮世界，让您的味蕾被轻松征服。
We are reinventing tea!
Thanks to excellent ingredients, creative recipes and a constant demand to remain unique, our company develops new products and flavours every day.Discover our specialties and let yourself be seduced by the taste of our teas.

Wiesenhof International GmbH

8.1B1-01(13)

Address: 德国 Lower Saxony-49429 Visbek-Paul-Wesjohann-Strasse 45 Germany Lower Saxony,-49429 Visbek,-Paul-Wesjohann-Strasse 45,
Tel: +49 4445 8910
Email: niels.heyer@wiesenhof.de
Web: www.poultry4u.de

WIESENHOF International (WHI), member of PHW Group with its headquarters in Lower Saxony, Germany, markets high quality chicken, turkey and duck specialities all over the world. Within PHW Group, WHI is the trusted international B2B sales organization and ensures highest food standards and full traceability from farm to fork.

Goldschmaus Group

8.1B1-01(16)

Address: 德国 Germany Lower Saxony-Garrel-Industriestraße 10-12
Tel: +49 4474 895-308
Email: wolkow@goldschmaus.de
Web: www.goldschmaus.de

We are the Goldschmaus Group - a unique German, regional network producing beef, pork and sausage products.

Weldebraeu GmbH & Co. KG

8.1B1-01(11)

Address: 德国 Germany Baden-Württemberg-Plankstadt-Brauereistraße 1
Tel: 008606313671369
Email: shirley--ting@163.com
Web: www.welde.de/en

In our Baden-based brewery we have always set the highest standards for the quality and taste of our beer. That is why we only use the finest raw ingredients. We deliberately take our time with the brewing and maturing process - that is how we make perfest, unparalleled craft beers for individual tastes. And we've been doing this since 1752.

Landgeflügel FG Vertriebsgesellschaft mbH

8.1B1-01(14)

Address: 德国 Germany Lower Saxony-49733 Haren-Im Industriepark 1
Tel: +49 5932 9975 0
Email: Arne.Jensen@landgefluegel.de
Web: www.landgefluegel.de

德国公司Landgeflügel按不同重量和保重规格要求为食品零售市场和食品工业加工市场提供新鲜鸡肉和冷冻鸡块。Landgeflügel公司产量为德国鸡肉产量的34%，出口到30个欧洲国家以及非洲和亚洲。本公司3,000多名员工通过垂直整合系统确保生产最高品质的产品。
Landgeflügel produces fresh and frozen chicken parts in every required weight and packaging unit for the food retail market and for industrial processing. Landgeflügel has a share of 34 percent of the German chicken production and exports to 30 European countries as well as to Africa and Asia. Over 3,000 employees ensure the highest product quality through a vertically integrated system.

Brand Qualitätsfleisch GmbH & Co. KG

8.1B1-01(17)

Address: 德国 Germany Lohne-Brandstr. 21
Tel: +49 4442 9236-0
Email: info@brand-lohne.de
Web: brand-lohne.de

Brand Qualitätsfleisch was founded in 1930 by Paul Brand – a family-owned enterprise now operating in the 4th generation. Slaughtering and deboning of pigs is the key performance. Food Safety, animal welfare and regionality have the highest priority in our company.

Heinrich Manten Qualitätsfleisch vom Niederrhein GmbH & Co. KG

8.1B1-01(19)

Address: 德国 Germany NRW-47608 Geldern-Möhlendyck 11
Tel: +49 2831 93840
Email: sales@heinrichmanten.de
Web: www.heinrichmanten.de

Manten provides pork meat "Made in Germany" for a global world. We offer quality in every aspect, from origin, slaughtering and processing to a reliable delivery. And we have been keeping this promise of quality for more than 60 years. Manten, as a family-owned and family-run company, stands for integrity, flexibility and reliability. We always focus on our customers and their individual needs.

Genuine German GmbH

8.1B1-01(20)

Address: 德国 Germany Berlin-Berlin-Oberwallstraße 6
Tel: 15618431773
Email: info@genuinegerman.de
Web: genuinegerman.de

Genuine German acts as official representative and trade partner of German category leaders across different industries. Our brands include leaders from cosmetics, baby food, lifestyle, household goods and other FMCGs.

Vion GmbH

8.1B1-01(21)

Address: 德国 Germany Rudolf-Diesel-Str.10 86807 Buchloe Germany
Tel: +49 8241/503-158 / +49 8241 503-0
Email: merve.koc@vionfood.com info@vionfood.com
Web:

Vion is an international leading meat producer with production locations in the Netherlands and Germany and sales support offices in thirteen countries worldwide. Our three divisions: Pork, Beef and Food Service, provide fresh pork and beef, and by-products for retail, foodservice and the meat processing industry.

VDP.Weingut HAART

8.1B1-01(22)

Address: 德国 Germany Ausoniusufer 18 Piesport Germany
Tel: +49 65072015
Email: info@haart.de
Web:

Weingut Haart lies only a few meters from the Mosel river and is probably one of the oldest private wine estates in the entire Mosel. With its 9.0 ha of vineyards the estate is committed to the best of what the Mosel has to offer: Riesling.

DAKAHLIA AGRICULTURAL DEVELOPMENT CO.,S.A.E

8.1B1-02

Address: 埃及 Egypt Cairo-Nasr City-15 Ramo Buidg.-El Nasr Road
Tel: 0411-86520539
Email: wangl@glorytimes.cn
Web:

During the development of over 40 years,the fruit of XINGYEYUAN has gained customers'trust through its reputation of nutrition,health,safety and traceable quality.To be the best company for you,we focus on the supply of true original quality products from China and from the best orchards around the world.

Costa

8.1B1-03

Address: 澳大利亚 Australia Victoria-Ravenhall-275 robinsons road, Costa
Tel: +61383639114
Email: rachael.altair@costagroup.com.au
Web: www.costagroup.com.au

Costa is Australia's leading grower, packer, marketer and exporter of premium quality fresh fruit and vegetables. From this market-leading position, we work incredibly hard to keep improving the quality of our produce and the service we provide to our customers.
Our business is to on six core product categories: Berries, Mushrooms, Tomatoes, Citrus, Table Grapes, & Avocados.

Beef Master Kimberley (PTY) Ltd

8.1B1-04

Address: 南非 South Africa Free State-Kimberley-Krollenboog Christina
Tel: 0113973073
Email: jeff@chinaexpo.co.za
Web:

Frozen beef manufacturer in South Africa and exporter.

Royal Oak International Development

8.1B1-05(02)

Address: 南非 South Africa Gauteng-Benoni-123 Unvender str
Tel: 0118754366
Email: jeff@chinaexpo.co.za
Web:

Wine farming, wine making and wholesaling wines.

Koup Knoffels House of Garlic

8.1B1-05(03)

Address: 南非 South Africa Western Cape-Cape Town-Oskoplavkte
Tel: 0116153780
Email: jeff@chinaexpo.co.za
Web:

Koup Knoffels House of Garlic is a condiments manufacturing using garlic.

Gravel Junction (PTY) Ltd

8.1B1-05(04)

Address: 南非 South Africa Western Cape-Paarl-Plot 6A Farm,
Tel: 0829274901
Email: ybzhou25@hotmail.com
Web:

Family business in wine farm and wine making and distribution.

Tweeter Quail Products

8.1B1-05(05)

Address: 南非 South Africa Limpopo-Polokwane-35 Rabe Street
Tel: 0116153780
Email: jeff@chinaexpo.co.za
Web:

Quail eggs and meat.

Konempire Ta Koni Wines

8.1B1-05(06)

Address: 南非 South Africa Western Cape-Cape Town-Cape Town
Tel: 0116153780
Email: jeff@chinaexpo.co.za
Web:

South African Premium Wine manufacturer.

Alvarita

8.1B1-05(07)

Address: 南非 South Africa Western Cape-Leopard Rock-7 Regency Crescent
Tel: 0116153780
Email: jeff@chinaexpo.co.za
Web:

Nitrate Testers.

Genesis Pharmaceuticals

8.1B1-05(08)

Address: 南非 South Africa North West-Schweizer Reneke-62 Rob Ferreira
Tel: 0116153780
Email: jeff@chinaexpo.co.za
Web:

Personal care nutritional meterials.

Magetz Guest Amenities cc

8.1B1-05(09)

Address: 南非 South Africa Mpumalanga-Hazyview-8 Krone Road
Tel: 0116153780
Email: jeff@chinaexpo.co.za
Web:

Drinks for energy and detoxing.

Purple Puppy Studio

8.1B1-05(10)

Address: 南非 South Africa Western Cape-Cape Town-1 Michelle Street
Tel: 0116153780
Email: jeff@chinaexpo.co.za
Web:

Premium South African Wine Manufacturer South African arts and crafts.

Motsau Techonologies Automotive Assemblies

8.1B1-05(11)

Address: 南非 South Africa Gauteng-Pretoria-78 Downunder
Tel: 0116153780
Email: jeff@chinaexpo.co.za
Web:

sport and relaxing drink and mixture.

Mothibi Innovative Solutions

8.1B1-05(12)

Address: 南非 South Africa Gauteng-Pretoria-Ford motors company
Tel: 0116153780
Email: jeff@chinaexpo.co.za
Web:

Sport nutritional additives and sport drink.

Ikukeng Automotive

8.1B1-05(13)

Address: 南非 South Africa Gauteng-Tsakane-8678 Tswako Street
Tel: 0116153780
Email: jeff@chinaexpo.co.za
Web:

Additives for sports drinks.

Bradchem Hygeine Solutions / Bradchem Hygiene Solutions

8.1B1-05(14)

Address: 南非 South Africa Gauteng-Alberton-8 Vaal Road
Tel: 0116153780
Email: jeff@chinaexpo.co.za
Web:

Liquors manufacturer.

Bayede (PTY) Ltd

8.1B1-05(15)

Address: 南非 South Africa Western Cape-Cape Town-35 Philip str
Tel: 0836503585
Email: anto@bayede.co.za
Web:

wine making and distribution.

Barui-Driehoek Cooperative

8.1B1-05(16)

Address: 南非 South Africa North West-Vryburg-Driehoek Farm
Tel: 0116153780
Email: jeff@chinaexpo.co.za
Web:

Beef and lucern.

Millhart t/a Redberry Farm

8.1B1-05(17)

Address: 南非 South Africa Western Cape-Cape Town-88 Dry
Tel: 0116153780
Email: jeff@chinaexpo.co.za
Web:

Berry agro processing.

Livextracare (PTY) Ltd

8.1B1-05(18)

Address: 南非 South Africa Limpopo-Polowane-09 plot ezone
Tel: 0710756530
Email: livextracare@gmail.com
Web:

Moringa processed foods and additives to food or nutrition.

Ebotane (PTY) Ltd

8.1B1-05(19)

Address: 南非 South Africa Kwazulu Natal-Richards Bay-98 Larry king Road
Tel: 0605270888
Email: michelem@signaturejars.com
Web:

Jams, jellies, cramels manufacturer.

Vasvat Skietspan (PTY) Ltd

8.1B1-05(20)

Address: 南非 South Africa Northan Cape-Katu-587 Vasket str,
Tel: 0646810713
Email: paul@casvatwild.co.za
Web:

meat processing and distribution.

T-Legacy Component SA

8.1B1-05(21)

Address: 南非 South Africa Gauteng-Johannesburg-56 Corgi Road
Tel: 0827414889
Email: thenjim@tlegacy.co.za
Web:

Beetroots and root vegetables.

Innovo Networks

8.1B1-05(22)

Address: 南非 South Africa Western Cape-Cape Town-34 Holla str
Tel: 0832120554
Email: damian@innovonet.co.za
Web:

Food Additives.

Reba Chemicals (Pty) Ltd

8.1B1-05(23)

Address: 南非 South Africa Gauteng-Jhb-Chloorkop
Tel: 0116153780
Email: jeff@chinaexpo.co.za
Web:

Nickel Nitrate and Phosphate manufacturer.

La Borg Liquid (PTY) Ltd

8.1B1-05(24)

Address: 南非 South Africa Western Cape-Cape Town-9 the Mill Construction str, Zonnebloem
Tel: 011 6153780
Email: jeff@chinaexpo.co.za
Web:

La Borg Liquid is a group company, dealing with wine making and wine distribution.

Shake Universal Trading

8.1B1-05(25)

Address: 南非 South Africa Gauteng-Johannesburg-38A Derrick ave，Cyrildene
Tel: 0113973073
Email: jeff@chinaexpo.co.za
Web:

Grape and vynard growing and wine making.

Willow Creek (PTY) Ltd

8.1B1-05(26)

Address: 南非 South Africa Western Cape-Worchester-Willow Creek estate,
Tel: 0843308888
Email: john@willowcreek.co.za
Web:

Olive farm and olive oil and olive related products.

Rugani Juice (PTY) Ltd

8.1B1-05(27)

Address: 南非 South Africa Gauteng-Tarlton-22 Deleray
Tel: 0726989332
Email: wesley@ruganijuice.com
Web:

South Africa biggest manufacturer for carrot juice.

Russelstone Group

8.1B1-05(28)

Address: 南非 South Africa Gauteng-Pretoria-Stone House, 510 Makou str
Tel: 0861 6600 00
Email: info@russellstone.co.za
Web:

A holding company who is dealing with various investment on agriculture and farming.

Evenwest (PTY) Ltd

8.1B1-05(29)

Address: 南非 South Africa Gauteng-Johannesburg-356 Pomona St
Tel: 0116153780
Email: joe@sinotranssa.co.za
Web:

Our comapny is dealing with forwading and agri-processing products such as wines and other foods.

澳大利亚农牧业出口有限公司 / Australian Rural Exports Pty Ltd

8.1B1-06

Address: 澳大利亚 QLD-Brisbane-Level 8, 10 Eagle Street, Brisbane city, QLD AU Australia QLD-Brisbane-Level 8, 10 Eagle Street
Tel: +61730412800
Email: austrex@austrex.com
Web: www.austrex.com

AUSTREX作为全球领先的活畜出口商从澳洲、新西兰、南美和北美向全球出口活畜(种奶牛、种肉牛、奶山羊、商品肉用牛等)以及冻精、胚胎等遗传物质，并通过姊妹公司Paradigm Food（佰乐达食品）和ThriveAgri（世来福农业）出口高端牛肉和牧草等畜牧产品。已成功为中国输入了近50万头优质种牛/羊，成为中国顶端乳企/养殖集团的首选种畜供应商。

AUSTREX is a global leading exporter of livestock, semen,embryo and other genetic products. We export from Australia, New Zealand and other countries.So far,500,000 heads of quality breeding animals have been delivered to China over last 18 year.AUSTREX's sister companies,ThriveAgri and Paradigm Food have joined our supply chain with oaten hay and premium beef exported to our Chinese clients.

Northern Lights Foods

8.1B1-07(02)

Address: 加拿大 Saskatchewan-La Ronge-1 Marine Dr Canada Saskatchewan-La Ronge-53 Eagle Point Drive
Tel: (306) 425-3434
Email: jeapoi@hotmail.com
Web: www.northernlightsfoods.com

Based in Northern Saskatchewan, Northern Lights Foods markets premium organic wild rice around the world for over 30 years. Besides covering the Canadian market, their products are exported throughout Europe, United States, Middle East and China. Organic by nature, Northern Lights Foods wild rice is grown by the indigenous people in fresh and pure northern Canadian waters.

蜂星国际集团有限公司 / Cellstar International Group Limited

8.1B1-07(03)

Address: 加拿大 加拿大萨省里贾纳市McNab路113号 Canada 113,McNab Cres, Regina, SK, S4s 4B3, Canada
Tel: 13906485566
Email: 13906485566@163.com
Web:

Cellstar是一家加拿大的专业从事食品加工和出口的企业，它位于美丽的草原三省之一萨斯喀彻温省（以下简称“萨省”）的里贾纳市，Cellstar业务分布在加拿大和中国。

Cellstar is a Canadian company which is specialized in food manufacturing and exporting. It is located in the province of Saskatchewan, the center of the primary three prairies of Canada (for short, Saskatchewan as "SK"). The business of Cellstar is distributed in both Canada and China.

Canada Golden Cooking Oil Ltd

8.1B1-07(04)

Address: 加拿大 Canada Saskatchewan -Moose Jaw-1605 Caribou St. E
Tel: +1(306)9871234
Email: cgcoil@cggcanada.com
Web: www.canadagoldenoil.com

CGC is based in the beautiful Prairies of Moose Jaw, Sk and belongs to the Canada Golden Group of Companies. Our role is the sourcing of top quality Saskatchewan farmers and processors, so they can work together to ensure that the highest detail and quality goes into our final product that you see here today. That product is our 100% cold pressed pure Camelina&Canola Oil.

TA Foods Ltd

8.1B1-07(05)

Address: 加拿大 SASKATCHEWAN-YORKTON-72 broadwat st w Canada SASKATCHEWAN-YORKTON-72 broadway st w
Tel: 3067828804
Email: TERRY@TAFOODS.CA
Web: tafoods.com

TA FOODS IS A PRIVATELY OWNED FAMILY OPERATION IN YORKTON SASKATCHEWAN CANADA. WE SPECIALIZE IN FOOD PROCESSING AND PACKAGING MOSTLY GRAINS SUCH AS FLAX, OATS, HEMP, AND OTHER MIXES FOR STORE SHELF.

Wendell Estate Inc.

8.1B1-07(06)

Address: 加拿大 Canada SK-MacNutt-BOX 25, MacNutt, SK
Tel: +14317616043
Email: carolwendell@163.com info@wendellestate.ca
Web: www.wendellestate.ca

枫叶之国，家族纯酿。温德尔庄园蜂蜜，顶级蜂蜜来自于加拿大中部大草原，从蜜庄直接到您的餐桌。温德尔家族拥有80多年的经验，酿出珍贵的精品原蜜。

From the Wendell farm to your table, the finest Canadian prairie honey. With over 80 years of experience, Wendell Estate offers an exquisite, raw honey.

Greenfields Agriculture Corporation

8.1B1-07(07)

Address: 加拿大 Canada SK-Saskatoon-1332 8th Street East
Tel: (306)500-0035 / (306)491-6728
Email: sufrank@hotmail.com
Web: www.greenfieldsagriculture.ca

Greenfields Agriculture Corporation is specialized in exporting Canadian health foods (wild rice, honey, quick oats, steel cut oats, flax oil, non-GMO canola oil, chaga, ice wine, etc.) and agriculture commodities (peas, flax seeds, canola seeds, wheat, etc.).

Radouga Distilleries Inc.

8.1B1-07(08)

Address: 加拿大 Canada Saskatchewan-Blaine Lake-SE 13 43 7 West 3rd RM 434
Tel: 306.497.4048
Email: peter@radougadistilleries.com
Web: www.radougadistilleries.com

Smooth Like No Other Vodka.

澳門佳酒有限公司 / MACAU FINE WINE BAZAAR CO. LTD.

8.1B2-01(01)

Address: 澳门地区 澳門道咩卑利士街29號一樓B Macao Rua Tomé Pires, No 29, Apartamento B1, 1° Andar, Macau
Tel: +853 2872 0025
Email: info@macaubazaar.com.mo
Web: www.macaubazaar.com.mo

公司主打法國波爾多葡萄酒，有紅、白、干、甜等類型，由日常餐酒至名莊靚酒一應俱全，公司亦由法國、葡萄牙、德國、新西蘭和英國等地採購最具性價比的優質佳釀予客戶。公司採用冷藏集裝箱運輸葡萄酒，且多在秋冬季付運，以避免澳門炎熱的夏天對酒質造成的影響，確保葡萄酒在運輸和存儲過程中都得到妥善的處理，酒倉保持16至18攝氏度和60%至70%的濕度條件，使酒質能夠充分發揮其美味的潛力。

From everyday wines to the most celebrated kinds, we primarily focuses on providing high quality and high demand Bordeaux vintages – red, white, dry and sweet as well as those wines that we consider of the highest quality and best value. Our extensive portfolio is impressive, embracing 1er Cru to renowned wines that we sourced directly from France, Portugal, Germany, New Zealand and the U.K.

嘉俊貿易(澳門)有限公司 / JIA JUN TRADING (MACAO) CO., LTD.

8.1B2-01(02)

Address: 澳门地区 澳門羅神父制43號時代工業大廈閣樓A03室 Macao Room A03(Loft)Times Industrial Building, No.43Father Luo Street, Macau
Tel: 853-66686254
Email: hipshing@macau.ctm.net
Web:

嘉俊貿易有限公司經營代理葡萄牙紅酒及罐頭食品。

JIA JUN TRADING (MACAO) CO., LTD. operating agent Portuguese wine and canned food.

澳門宏基行有限公司 / Vang Kei Hong Trading Co.,Ltd

8.1B2-01(03)

Address: 澳门地区 澳門提督馬路16-A號B舖 Macao Av. Almirante Lacerda no.16-A, Loja B, Macau.
Tel: 28591636
Email: vkhtcl@macau.ctm.net
Web:

宏基行於1975年已開始業務，至1986年正式註冊成有限公司，擁有超過四十多年的經驗，宏基行有限公司現已成為本澳其中最活躍的經銷商之一，經營種類也較以前廣泛，如食品、酒類、凍品、凍肉、罐頭、雪糕、奶類、日用品等。
Vang Kei Hong was established in 1975 and registered as a limited company in 1986. For the last 4 decades, Vang Kei Hong has become one of the most active Importer and distributor in Macau with major business in distribution and wholesaling of various kinds of products that includes wines and spirits, frozen meat, dairy products, grocery items, snacks food, biscuits, confectionary and beverages.

Super Bock Group / Super Bock Macau

8.1B2-01(04)

Address: 澳门地区 Macau-Macau-Super Bock Macau Macao Macau-Macau-Alameda Dr Carlos D'Assumpcao, N411-417, 15 Andar, D-H, Edif, Dynasty Plaza, Macau
Tel: 62350678
Email: hoi.ka.kit@superbockgroup.com
Web: www.superbockgroup.com

Super Bock Group是葡萄牙最大的飲料生產企業，Super Bock Group從創始之初始終堅持用高品質的原料生產高品質的啤酒，帶給您純正的啤酒體驗，129年間從未懈怠。超級波克啤酒無疑是我們堅守品質的最好印證。如今，超級波克啤酒的品質已在全世界得到到廣泛認可，超級波克至今已連續榮獲36枚業界知名食品評鑑大會金獎，金牌品質使它成為了最暢銷的葡萄牙啤酒。
Founded in 1890, Super Bock Group is the largest Portuguese beverages company, with a multibrand and multimarket strategy, focused on the Beer and Bottled Water businesses. Producer of the famous brands such as Super Bock (Beer), Água das Pedras (Sparkling Water), Vitalis (Still Water) among others. Super Bock Group's products are present in more than 50 countries.

次次好（澳門）名優食品 / BEST TIME (MACAU) FOODSTUFF COMPANY

8.1B2-01(05)

Address: 澳门地区 MACAU-MACAU-澳門沙梨頭興華閣23F Macao MACAU-MACAU-RUA DA RIBEIRA DO PANTANE 99-107,23F EDIF HING WAH MACAU
Tel: 853-66836947
Email: fu_yun_cargo@hotmail.com
Web:

次次好（澳門）名優食品於2015年8月成立，主營澳門品牌"次次好"食品包裝銷售。如:雪燕,紫菜,牛肉粒,海味等食品。公司自成立以來，堅定統一信念：時刻保證新鮮貨源，增強一流服務意識，打造良好的企業信譽，不懈追求顧客的滿意。
The best time (Macau) foodstuff was established in August 2015. Macau brand "ci ci hao" Such as: Seaweed, beef , seafood and other foods.

羅德禮繼承有限公司 / F. RODRIGUES (SUCESSORES) LIMITADA

8.1B2-01(06)

Address: 澳门地区 澳門-澳門南灣大馬路羅德禮商業大廈二樓 Macao AVENIDA DA PRAIA GRANDE, Nº 599, EDIFÍCIO COMERCIAL RODRIGUES, 2º ANDAR, MACAU
Tel: +853 89883288
Email: frodrigues.angela@gmail.com
Web: www.frodrigues.com.mo

羅德禮洋行，由當初從事進出口業務開始，之後也有涉獵旅行社業務，在海內外也有參與船務、保險、製衣等行業，業務廣泛，但始終，最業績輝煌的，還是進口業務，能讓來自葡國的優質食品和美酒，在澳門成為家喻戶曉的美食美酒，更推進至大中華市場，讓更多人認識這些優質產品，促進葡語國家與中國的飲食產品交流，為澳門成為中國與葡語國家商貿平台奠定基礎，令羅德禮（繼承）有限公司乃至羅德禮家族引以為榮。
F. RODRIGUES (SUCESSORES) LIMITADA started his business as an import and export business. After that, he also participated in shipping, insurance, clothing. His business is extensive, but always, the most brilliant, or imported business, can come from The quality food and wine in Portugal have become a household food and wine in Macau, allowing more people to know these quality products.

澳門恆友小食 / Hang Iao Macau

8.1B2-01(07)

Address: 澳门地区-中國澳門-大堂巷6號地下 Macao-Macau China-Travessa da de no.6 RC Macau
Tel: 15363589870
Email: hangiao1995@gmail.com
Web:

澳门恒友创立于1995年的历史，老字号品牌也是全澳数一数二独有特色的小食店之一，在2019年开始设立工厂于澳门投入生产，以往在小工场生产的产品长期保持质量优势的管理及包装生产，而且拥有出名的自家制秘制咖喱在早期已经打响澳门地区、香港地区、台湾地区，最近四年广东省及中国其他地方也能认识我们，还有好的食材配合与推荐的牛杂及鱼丸类深受大家喜爱，现时合共本澳有十间恒友分店，我们的现有市场供应于零售、餐饮业、酒店业等。
The history of Macao Hengyou was founded in 1995. The old brand is also one of the best snack shops in Australia. In 2019, the factory was set up in Macao for production. In the past, the products produced in the small workshops maintained the quality advantage management and packaging for a long time. Production.

万利来（澳门）实业公司 / MAN LEI LAI (GROUP) COMPANY LIMITED

8.1B2-01(08)

Address: 澳门地区 澳门特别行政区-澳门特别行政区-罗神父街45号时代工业大厦1楼A2 Macao A2, 1F, Times Industrial Building, No.45Father Luo Street, Macau
Tel: 13302870853
Email: sunnsun@163.com
Web:

MAN LEI LAI (GROUP) COMPANY LIMITED mainly responsible for food and wine, canned food, etc. in Portuguese-speaking countries.

澳门香记肉干 / HEONG KEI DRIED PORK

8.1B2-01(09)

Address: 澳门地区 清平直街4号地下 Macao G/F,No.4 Qingpingzhi Street
Tel: 00853-62505493
Email: 445487874@qq.com
Web: www.heongkei.com

提起澳门香记，粤港澳几乎无人不知，享"港澳第一家"美誉，其始创人以鲜烤肉干创业于新加坡，并于1969年引进澳门。本公司手信产品主要有:肉干、肉粒、蛋卷、杏仁饼及花生糖等系列!是居家生活及送礼之首选佳品!
HEONG KEI DRIED PORK is Introduced in 1969 in Macau. The company's hand letter products mainly include: dried meat, meat, egg rolls, almond cake and peanut candy series! It is the best choice for living at home and giving gifts!

聚贤有限公司 / GOOD TOGETHER COMPANY LIMITED

8.1B2-01(10)

Address: 澳门地区 澳門慕拉士大馬路221號南方工業大廈第一座二期4樓A座。Macao EM MACAU, AVENIDA DE VENCESLAU DE MORAIS N。221，NAM FONG KONG IP TAL HA BLOCO1，4。ANDAR A.
Tel: 00853-28370237
Email: 13809237071@139.com
Web:

聚賢有限公司（GOOD TOGETHER COMPANY LIMITED），從事食品批發、生活用品批發、零售及出入口。
GOOD TOGETHER COMPANY LIMITED Engaged in food wholesale, daily supplies wholesale, retail and import and export.

聚能有限公司 / POWER TOGETHER COMPANY LIMITED

8.1B2-01(11)

Address: 澳门地区 澳門慕拉士大馬路221號南方工業大廈第一座二期4樓A座。Macao EM MACAU, AVENIDA DE VENCESLAU DE MORAIS N。221，NAM FONG KONG IP TAL HA BLOCO1，4。ANDAR A.
Tel: 00853-28370237
Email: 13809237071@139.com
Web:

聚能有限公司（POWER TOGETHER COMPANY LIMITED），從事食品批發、生活用品批發、零售及出入口，致力於葡語國家產品的推廣。
POWER TOGETHER COMPANY LIMITED Engaged in food wholesale, daily necessities wholesale, retail and import and export, dedicated to the promotion of products in portuguese-speaking countries.

都天集團有限公司 / DUTYGROUP Co.,Ltd.

8.1B2-01(12)

Address: 澳门地区 漁翁街166-190號永好工業大廈12樓D座 Macao RUA DOS OESCADORES,NO.166-190,EDIF. IND.VENG HOU,12 ANDAR D
Tel: 00853-63188222
Email: 138301312@qq.com
Web:

澳門友誼食品飲料廠是澳門都天集團有限公司旗下的全資食品製造廠，本廠以葡萄牙特色及澳門傳統特色手信為主要生產產品，涵蓋餅製品、巧克力製造等等類目，旗下拥有AMISADE、PRORICO等等品牌知识产权。
Macau Amizade Food and Beverage Factory is a wholly-owned food manufacturer owned by Macau DUTY Group Co., Ltd. It mainly produces Portuguese-style and Macau-style foods. It covers cake products, chocolate manufacturing and other categories. It owns brand intellectual property rights such as AMISADE, PRORICO and so on.

百力集团有限公司 / PAK LEP GROUP COMPANY LIMITED

8.1B2-01(13)

Address: 澳门地区 澳门-澳门-慕拉士大马路221号南方工业大厦一座2楼C座 Macao Macau-Macau-AVENIDA DE VENCESLAU DE MORAIS NO.221,NAM FONG KONG IP TAI HA BLOCO 1, 2 ANDAR C
Tel: +853-28956087 / +853 28956087
Email: 17707560266@qq.com
Web: www.paklekgroup.com

2015年起，百力集团先后斥资5亿元人民币，收购了葡萄牙多家顶级酒庄产业。在澳门设立百力贸易总部，在大陆地区投资兴建了百力综合体、画家之山酒店、江门仓储基地等项目。并结盟多家集团企业，现已形成遍及大陆地区的完整产业网络体系。接下来，百力集团将继续扩大在华贸易投资，以贸易助力百力文创、旅游等业务，全面打造百力集团品牌与产品品牌。同时，百力集团将联合国内各方合作者，共享优势资源，开拓市场。
Pak Lek Group is a conglomerate founded in Macao, China. We have been a dedicated follower of the Belt and Road Initiative since 2015 and has developed associated businesses. In 2016, Pak Lek Group invested over RMB 500 million in acquiring Portuguese assets and developing an encompassing system of investment, production and sales throughout China and Europe.

藝龍國際生物科技有限公司 / E Dragon International Biotechnology Co.,Ltd

8.1B2-01(14)

Address: 澳门地区 澳門勞動節大馬路214號裕華大夏第十座地下C Macao C,G/F,Block10, YuHuadaxia, No.214 Labour Day Main Road, Macau
Tel: +853-63763818
Email: cs1@f-chicard.com
Web:

藝龍國際生物科技有限公司於澳門特別行政區成立，是一家集研發、生產及銷售的生物科技公司。公司的經營理念理是「以產品的效果，換客戶的忠誠」。公司的主要生產基地，分別在澳門及臺灣，而銷售市場則包括港澳台及國內市場，網路電商也是重點銷售平台。目前，公司開發銷售的產品以不同國家及地區的拳頭產品為主分別有：臺灣的牛樟芝、馬來西亞的東革阿里等等，也為其他公司做代工，包括瑪卡、紅景天、西洋參等十多種產品。公司。
E Dragon International Biotechnology Co.,Ltd established in Macao SAR. The products developed and sold by the company are mainly based on the fist products of different countries and regions: Niuzhizhi, Tongkat Ali, etc., and also do OEM for other companies, including Maca, Rhodiola, American ginseng, etc. More than ten products.

益健海洋食品（澳門）有限公司 / YICK KIN MARINE FOODS (MACAU) CO., LTD.

8.1B2-01(15)

Address: 澳门地区 黑沙環中街495號廣福安花園第八座地下Q鋪 Macao KUONG FOK ON FA UN, BL.8
Tel: （00853）28713600
Email: judy1987lam@gmail.com
Web:

YICK KIN MARINE FOODS (MACAU) CO., LTD. specializes in the business of healthy food, such as seaweed products, sea sault. Our products sell well in both domestic and local markets.

澳門一品堂生物科技有限公司 / MACAO TOP GRADE BIOLOGICAL SCIENCE COMPANY LIMITED

8.1B2-01(16)

Address: 澳门地区 澳門北京街126號怡德商業中心25樓C Macao Rua de Pequim No126, I Tak Com.Center,25C Macau.
Tel: 00853-28830721
Email: jovi@aksomacao.com
Web: www.aksomacao.com

我司是以自主創新為主體的澳門企業。經過科研人員多年的探索研究，運用生物技術對野生北冬蟲夏草子實體進行基礎研究，經過300多代的篩選、優化、復壯，成功研發出無污染、無農殘、高純度蟲草素含量的新一代北蟲草。經國內外權威機構檢測，該產品富含蟲草多糖、蟲草酸、腺苷、多種氨基酸等活性成份，特別是蟲草素的含量高達1.2%，已達到國際領先水平。
We are a creative Macao company. After above 300 generations of screening, optimization and rejuvenation, new generation of pollution-free, pesticide-free, high-purity cordycepin militaris was made. It is tested that cordycepin found in our product is 1.2% (a world leading level). It is rich in cordyceps polysaccharide, cordycepic acid, adenosine, and amino acids. It is safe without harmful content.

密利拿酒業集團有限公司 / QUINTA DA MARMELEIRA WINERY GROUP LIMITED

8.1B2-01(17)

Address: 澳门地区 Macao China-MACAO-畢仕達大馬路26號中福商業中心10樓I座 Macao MACAO-MACAO-AVENIDA DE MARCIANO BAPTISTA NO.26 EDIF. CENTRO COMERCIAL CHONG FOK 10 ANDAR,I MACAU
Tel: +853 28752152
Email: moon.chen@quintamarmeleira.com
Web: www.quintamarmeleira.com

密利拿莊園位于葡萄牙里斯本郊外西北部阿倫克爾市，距離里斯本市中心30分鐘車程及首都國際機場20分鐘車程。在2015年，為響應中央政府"一帶一路"的倡議下，莊園由一位熱衷于葡萄牙文化的澳門企業家收購，並在澳門設立葡萄牙密利拿莊園的總辦事處，以銷售及推廣此莊園所生產的葡萄酒為主。主要市場面向中國內地及東南亞，遠至歐洲各地。
Quinta da Marmeleira, is mainly for wine making with grapes grown in its own land, located in Lisbon. In 2015, supporting "the Belt and Road Initiative" Policy of the Chinese Government, the winery was purchased by a Macao Entrepreneur, who is very passionate about Portuguese Culture, had set up the head quarter of the winery Macao.

LONG TIAN TRADING

8.1B2-01(18)

Address: 澳门地区 Macao China Avenida Artur Tamagnini Barbosa No.298, 13 Andar, A13 Edif. Ind. Pacifico, Bl.2.
Tel: 853-28703301
Email: kingfordtrading@163.com
Web:

朗天洋行主要經營哥露華紅酒和利佰高餅乾。紅酒來自葡萄牙春天酒莊，其被譽為"葡萄牙國家最重要酒商"之一，擁有全自動化的生產設備和精密的測量儀器；設有先進的微生物實驗室、生產實驗室、葡萄酒釀製中心和儲存室，確保紅酒生產過程中種植、採摘、釀造、包裝、存儲的每一個環節都安全、乾淨、高質。絕對原裝原瓶進口，性價比高。
Long Tian Trading focus on red wines and biscuit. Our red wines with the Brand of Groval are imported from Portugal. Products with high quality and reasonable prices.

葡韻手信 / Lusocasa

8.1B2-01(19)

Address: 澳门地区 澳門馬場東大馬路15-69號福泰工業大廈13樓B座 Macao AV.LESTE DO HIPODROMO,NO.15-69,EDIFICIO INDUSTRIAL FOK TAI,13 ANDAR B,MACAU

Tel: 00853 28282205

Email: mail@guiafoodmo.com
mail@guiagoodmo.com

Web:

葡韻手信的產品重質重量，更通過 ISO9001:2008質量管理系統的驗證,確保了產品品質優良的透明度。食物製作方面，我們嚴格選用原材料，無論從設計到技術上都體現了獨特的歐陸風味,並一直堅持走低糖、低脂、高纖、新鮮的製作路線。
我們整齊的門店規劃、合理的購物路線、親切的服務態度，配合優質的產品並以市場為導向、以顧客的滿意為目標，不斷改善創新以迎合每一位顧客的需求。
Lusocasa Plant is also the first local brand being accredited with ISO: 9001: 2008 certificates in the pursuit of international food safety standards. In addition, Lusocasa plant has a complete design and development of Cold Supply Chain Management. Lusocasa Plant's independent Cold Chain. Logistic is in place to ensure the freshness and food safety.

南光貿易有限公司 / NAMKWONG COMMERCIAL COMPANY LIMITED

8.1B2-01(20)

Address: 澳门地区 澳门罗理基博士大马路南光大厦 Macao Avenida do Dr.Rodrigo Rodrigues，NamKwong Building，Macau

Tel: （853）83911415

Email: guoxuanyu@nakwong.com.mo

Web:

公司是澳门各类鲜活商品和冷冻食品的主要供应商之一，在澳门市场上占有相当份额。公司一直致力于保障澳门民生商品供应的及时和稳定，保障供澳鲜活商品和食品的卫生防疫和安全，为澳门社会和民生事业的发展做出了贡献。与此同时，公司充分利用澳门地区作为“中国内地与葡语国家经贸联系与合作的服务平台”的功能，与葡语国家众多客商保持着长期的经贸与商业往来，积极拓展对葡贸易业务，促进双方各个领域的文化交流及合作。
The company has been committed to ensure the Macau people's livelihood of commodity supply timely and stability, at the same time ensure the safety of fresh goods and foods. It has contributed to the development of society and people's livelihood in Macau.

佳利发展有限公司 / FOMENTO INDUSTRIAL KAI LEI LIMITADA

8.1B2-01(21)

Address: 澳门地区 MACAU-EDIF, YAEE NAM-澳门关闸大马路64号怡南大厦E,F座地下 Macao ISTMO FERREIRA AMARAL,64E,F,R/C-1ANDAR

Tel: （853）28438686 / 853-28438686

Email: 828c@kaileimacau.net
828c@keilaimacau.net

Web: www.828c.com

佳利发展有限公司成立于1982年，拥有超过37年的化妆品制造经验和日本商品进出口贸易经验。我们以澳门为地区总部代理高质量的葡萄牙红葡萄酒、白葡萄酒、橄榄油等极具葡语国家特色的商品。同时也代理日本高品质清酒、婴幼儿用品食品等。经营范围非常广泛包括日本奶粉、尿不湿、卫生巾、化妆品、马油商品、洗涤用品、牙膏牙刷、大米、威士忌、面、调味料等。香港地区和澳门地区的一些知名百货商店、超市、化妆品连锁店都是我们的合作伙伴。
FOMENTO was found in 1982,we have more than 37years in cosmetics manufac turing experience and import and export trade of Japanese goods.To experience. Our headquater located in Macao region, we ar e agnet of high quality Portuguese red wine, ol ive oil and others. At the same time, it also act s as an agent for Japanese high-quality sake, infantproducts, food and so on.

QQ美食世界有限公司 / QQ Food World Co.,Ltd

8.1B2-01(22)

Address: 澳门地区 澳門飛能便度街，華豐樓，2樓b座 Macao B, 2f, Huafeng Building, Bongo Street, Macau

Tel: 28216589

Email: macauqq8202@gmail.com

Web:

QQ美食世界專營製造特色馬拉盞及醬料系列。
QQ Food World Co.,Ltd specializes in the manufacture of marathon and sauce series, 100% made in Macau.

鼎源貿易有限公司 / DING YUAN TRADING LIMITED

8.1B2-01(23)

Address: 澳门地区 澳門高原街19A-19B月明樓地鋪 Macao G/F, Moon House, 19A-19B, Plateau Street, Macau

Tel: 853-62648188

Email: 1126931638@qq.com

Web:

澳門“鼎源貿易有限公司”，旗下分公司包括“珠海澳之味食品有限公司”是一家以誠、質為本的公司，註冊品牌分別為“澳の味”和“七零八嘴”，進口世界各地名優食品，以及一系列“澳の味”自主品牌的產品，澳門主要業務是批發，在澳門地區多達100多家下游經銷商，銷售網絡覆蓋整個澳門以及香港地区，在國內已經進行連鎖直營銷售、香洲百貨、香洲歌劇院海韻…)。
Macao "Ding source trading co., Ltd.", this family: Makoto, quality goes in, Ltd., "taste Macau" Note Books products tile sorting order, Susumu mouth world around actor food, more and series "taste Macau" voluntary product of tile product announcement, Macao area many people 100 multi-family under «economics newsletter business.

澳門金來菜蜜廠 / KAM LOI CHOI MAT CHONG

8.1B2-01(24)

Address: 澳门地区 澳门-澳门-澳門青洲河邊馬路1281號金來工業大廈2/I Macao 2/I, Jinlai Industrial Building, No.1281 Qingzhou Riverside Road, Macau

Tel: 15363581215

Email: makmakchan850916@gmail.com

Web:

<金來菜蜜廠>口味誕生成立於1954年，澳門菜蜜製造商的始祖。最初供應給各大茶餐廳而聞名，成為了老少咸宜的健康飲料。中國植物飲料行業已經進入了新的發展階段,以涼茶為代表的植物健康飲品迅速崛起。在這樣的背景下,<金來正宗菊蜜>正是時候,並憑藉全新產品理念引領了新的市場潮流!
KAM LOI CHOI MAT CHONG was born in 1954, the ancestor of Macao vegetable honey maker. Originally known as a major tea restaurant, it has become a healthy drink for all ages. The plant beverage industry has entered a new stage of development, and plant health drinks represented by herbal tea have risen rapidly.

幸運來手信 / Pastelaria Han Van Loi

8.1B2-01(25)

Address: 澳门地区 Macau-Macau-澳門亞馬喇土腰門牌6號海南花園第一座地下 Macao G/F,1, HaiNan Garden, No.6 Amarathu Waist, Macau

Tel: 63828323

Email: supermanintel@gmail.com

Web:

幸運來手信位於澳門關閘廣場，是一間經營了超過二十年的正宗澳門特產、手信店鋪。有具澳門特色的傳統手信,也有新時代特製的,獨一無二的“滲透辣”豬、牛肉乾，這種“滲透辣”令傳統的豬、牛肉乾吃起來與別不同。更有獨家首創、用料十足的極品雙重蝦子麵皇,不但極盡鮮味及食法多變,而且易於煮理。顧客食過後回味無窮；認為是極好的新式澳門特產手信、首選送禮佳品。
Pastelaria Han Van Loi is an authentic Macao specialty and handwritten shop that has been in business for more than 20 years. There are traditional handwritten letters with Macao characteristics, and there are also unique "infiltration" pigs and beef jerky in the new era. This "infiltration" makes traditional pigs and beef jerky different.

博奧洋行 / BOAOLIFENG COMPANY, MACAU

8.1B2-01(26)

Address: 澳门地区 澳門高利亞海君上將大馬路41號激成工業大廈第3期5樓R座 Macao Avenida Almirante Correia NO.41 Edif Centroindustrial Seng 5 Ander, R5 MACAU

Tel: 00853-66820069

Email: nantaimacau@hotmail.com

Web:

澳門博奧洋行成立於2012年公司致力於進口原瓶、原裝紅酒批發，為客戶提供世界一流的紅酒產品及優質的服務。公司所銷售的產品來自葡萄牙地區於1963年創立的博尼法西奧酒莊。酒莊葡萄園位於埃什特雷馬杜拉酒區，是葡萄牙的第二大產酒區，每年產出超過一億公升葡萄酒。博尼法西奧酒莊釀造的紅酒獲得眾多國際紅酒竞賽獎項，被葡萄酒專家認可“客戶的信賴的品牌供貨商”是我們的追求目標。
BOAOLIFENG COMPANY, MACAU established in 2012, our company is committed to importing original bottles and original wine wholesale, providing customers with world-class wine products and quality services.

萬訊行綜合設備有限公司 / Companhia de Equipamentos Master, Limitada

8.1B2-01(29)

Address: 澳门地区 澳门特别行政区-澳門半島-提督大馬路131號華隆工業大廈7A 澳門 Macao Avenida de Almirante Lacerda No. 131,Edf. Industrial Wa Long 7A, Macau

Tel: （00853）28713600

Email: master@mastermacau.com

Web: www.mastermacau.com

萬訊行綜合設備有限公司(Companhia de Equipamentos Master, Lda.)成立於2004年，先後組建了開發部、通訊系統及資訊科技部、工程的維修保養部等部門。業務範圍包括：停車場系統設備、軟件系統開發、醫療輔助系統設備、跨境電商平台及設備等。
Companhia de Equipamentos Master, Limitada was set up in March 2004, we are authorized by oversea countries to be their main distributor. Our main series now include wine, healthy food, canned food etc. Our Macau Store Cross-Border E-commerce Platform also provide cross-border delivery and warehousing one-stop service for foreign companies.

Next V Wines & Gourmet Food

8.1B2-01(32)

Address: 澳门地区 Macao China Av. Praia Grande 429, 17-A Macau

Tel: 853-66890858

Email: mjgregor@macau.ctm.net

Web:

Next V Wines & Gourmet Food acting imported Portuguese red wine, Angola and Brazilian coffee.Cafe Cazengo is organic and 100% Robusta. And is packed in two varieties: Roasted coffee beans and ground roasted coffee. The company Salinas Calombolo having its Headquarters and Production units located in Benguela.

媽閣食品生產貿易加工廠 / Fabrica de Producao de Alimentos BARRA

8.1B2-01(27)

Address: 澳门地区 macau-macau-澳門慕拉士大馬路185號澳門工業中心12樓H座 Macao macau-macau-Avenida Venceslau de Morais, No.185, Centro Industrial Macau,12 Andar H

Tel: (853) 2876 2129

Email: 2014734355@qq.com

Web:

媽閣餅家,在清未民初時由一名貧窮漁女所建立，一個令澳門人回味的名字，其製餅技術有一百多年歷史。在2007年由吳麗蘋女士重新建立,以漁女傳統傑出的製餅技術為核心,再引入高科技品質控制技術,使媽閣餅家成為澳門人心中最回味的食品，現有特色食品二十多種，其中最受歡迎有炭燒杏仁餅,棋子餅,鳳凰卷,等…本公司目標是要將媽閣婆婆傳統傑出手工藝和樂善的精神傳到世界各地,使每一個人都能享受到美味可口的澳門美食。
Fabrica de Producao was founded by a poor fisherwoman at the beginning of Qing dynasty. It is a name that makes Macao people relish. Its cake making technology has a history of more than 100 years. Re-established in 2007 by Ms. Wu Liping, with the outstanding traditional cake-making technology of the fisherman's tradition as the core, and the introduction of high-tech quality control technology.

洽群錡鋒有限公司 / PEOPLE AND WINDS COMPANY LIMITED

8.1B2-01(30)

Address: 澳门地区 澳門慕拉士大馬路221號南方工業大廈第一座二期4樓A座。Macao EM MACAU，AVENIDA DE VENCESLAU DE MORAIS N。221，NAM FONG KONG IP TAL HA BLOCO1，4。ANDAR A.

Tel: 86-756-8302188

Email: 58269172@qq.com
13809237071@139.com

Web:

PEOPLE AND WINDS COMPANY LIMITED operating brands - QiaQun import street, show large imported products exhibition center, business area of 2400 square meters. Company professional team for many years engaged in the import food agent for overseas and suppliers to provide professional customs declaration.

Easy Share Technology Network Limited

8.1B2-01(28)

Address: 澳门地区 Macao China Macao-Macao-Floor 17 J, 181-187 Centro Comercial do Grupo Brilhantismo, Alameda Dr. Carlos d' Assumpção

Tel: +853-85903914

Email: info@ec-share.com

Web: www.ec-share.com

Easy Share Technology Network Limited, as a member of Sino-Portuguese E-Commerce Chamber, is a full-service provider for cross-border e-commerce to help foreign sellers to sell their products directly to the consumers in China.

佳英食品有限公司 / Bright Elite Gourmet Company Ltd.

8.1B2-01(31)

Address: 澳门地区 澳門青洲河邊馬路跨境工業區澳門園區D5地段2樓 Macao Terreno Junto Estrada Marginal Da Ilha Verde,Parque Industrial Transfronteirico Zhuhai-Macau (Zona de Macau) Lote D-Parcela D5 2/F

Tel: +853 2825 2520

Email: ivytsang@yengkee.com.mo

Web: yengkee.com.mo/sc/index.php

澳门英记饼家始於一九二八年，为澳门最老牌饼家之一。承传独特制饼技艺，香传澳门地道风味逾九十年，每一件糕饼都承载着一份岁月淬炼下的好滋味。澳门英记将传统与创新兼容并蓄，紧跟时代步伐，增设了现代化厂房，以最高的卫生标准生产上乘优质的美食，并将门市设计得时尚亮丽，以精巧的包装和细心的服务给顾客新的购物体验。深情厚礼，心思满载，正是澳门英记九十多年不变的坚持。
Founded in 1928, Macau Yeng Kee Bakery is a souvenir brand with long history in Macau. While Yeng Kee stands by its traditional recipes to bring the best tastes of Macau, we are proud to enhance attraction to consumers by establishing modern factories and developing new products with outstanding flavors.

火车头文化创意有限公司 / Choochoo Culture Creative Ltd

8.1B2-01(33)

Address: 澳门地区 关闸华大街12号海南花园2座地下J铺 Macao Rua Va Tai, No. 12, Bloco 2, Edif. Jardins Do Mar Do Sul, RC-J

Tel: +853 28350698 / 28350698

Email: alexcheng9931@gmail.com

Web: www.macaumazu.com

火车头文化创意有限公司以文化创意去设计、制作、推广、销售特色产品，拥有自己的食品加工厂“都天食品饮料厂”制做特色食品，提供客户一条龙配套服务。澳门回归祖国20多年，中葡建交超过40多年，澳门本地文化充满了中国和葡国特色，公司以此为中心，把中葡有形或无形内容所含文化本质，将之揉合和融和,从而创作出新的文化艺术,经过再创造、生产与商品结合。已设计和注册了“开心大熊猫”、“澳门妈祖”、“澳门印象”。
Choochoo Culture Creative Ltd is a company to provide one-stop services including design, production, marketing and distribution from design to finished product to our customers. More than 20 years since the return of Macao to the motherland, the establishment of diplomatic relations between China and Portugal has been more than 40 years. The local culture of Macao is full of Chinese and Portugues.

黄枝記食品(澳門)有限公司 / Wong Chi Kei Foods (Macau) Co., Ltd.

8.1B2-01(34)

Address: 澳门地区 澳门-No.37-53 Rua Graciosa, Chiao Kuang Bldg, 2A Macao Macau-Macau-No.37-53 Rua Graciosa, Chiao Kuang Bldg, 2A
Tel: +853 28481134
Email: chris@sanyutang.com.hk
Web:

今天已是黄枝记的第七十三年，黄枝记已有第三代传人，秉承竹升打面古法，不忘始创人那种精益求精的精神，继续为发扬广东面食而努力。黄枝记先后在澳门议事亭前地、官也街开设分店；近年更推出礼品手信「爷爷面」系列，以方便食家、游客品尝此具有广东传统面食。
Wong Chi Kei is now entering the third generation, still dipping into the tradition and spreading the Cantonese noodle culture by expanding the shop from Macau region to other parts of the world. Today, Wong Chi Kei operates 3 shops at the prime locations in Macau and a noodle-making factory. On top of its famous noodle dishes, it has diversified its business into gift pack market as well.

天元泰和集團有限公司 / TIN UN TAI WO GROUP COMPANY LIMITED

8.1B2-01(38)

Address: 澳门地区 澳門高利亞海軍上將大馬路41號，激成工業大廈第三期9樓W室 Macao Avenida Do Almirante Magalhaes Correia, No. 41, Edificio Industrial Keck Seng, Bloco III, 9 Andar W, Macao
Tel: 853-68813298 / 853-68813298
Email: tutwg.mo@gmail.com
Web: www.tutwg.com

天元泰和集团有限公司于2010年3月在澳门成立，公司集生物科研和产品制造于一体，重点发展生物科技，中药食品，中药保健品，中草药化妆品，中草药健康饮料等。澳门泰和堂保健食品生产厂，在澳门进行研发生产。本司致力打造「澳门制造」的品牌，开拓中国，香港、澳门地区市场，并展望把产品出口到东南亚和欧盟国家.目前公司出品的健康保健养生食品，坚持由澳门生产保证质量。
TIN UN TAI WO GROUP COMPANY LIMITED was established in Macau in March 2010. The company integrates biological research and product manufacturing, focusing on the development of biotechnology. The company is committed to building a "Made in Macau" brand. At present, the company's health care health food products adhere to the quality guaranteed by Macao.

实力堡澳门出入口贸易行 / Setubal Macau Trading Company

8.1B2-01(35)

Address: 澳门地区 澳门-澳门-澳门 Macao Macau
Tel: 15338160187
Email: 792821272@qq.com
Web:

實力堡澳門出入口貿易行，專門代理葡萄牙原裝進口紅酒，致力於葡萄酒文化的研究推廣，由專業試酒師到各國著名酒區，酒庄及廠家鑒賞採購，帶來優質葡萄酒，使更多人愛上葡萄酒。
Setubal Macau Trading Company specialized in Portugal imported wine, dedicated to the research and promotion of wine culture, from professional bartenders to famous wine regions, wineries and manufacturers to appreciate the purchase, bring high-quality wine, so that more people like wine.

北海道食品厂 / Hokkaido Food Factory

8.1B2-01(39)

Address: 澳门地区 澳门飞通工业大厦第一期13楼C Macao Abenida De Venceslau De Morais EDF.IND.Air-way，Bl.1，No，209,13 Andar C
Tel: 853-66398915
Email: 15384355866@qq.com
Web:

Our company has been specializing snacks products in China for many years. We sincerely welcome you to visit our company or contact us for cooperation! Giovanna - a merger between Japan and Macau of China, that was the turning point for rejuvenation of brand,Our company has been specializing snacks products in China for many years.

朗文坊有限公司 / LMF Company Limited

8.1B2-01(41)

Address: 澳门地区 澳門氹仔成都街 15號花城牡丹花園地下L座 Macao Rua de Seng Tou No. 15, Edif Flower City - Mau Tan Garden R/C L, Taipa Macau
Tel: +85328723999
Email: jeffrey.sou@lmfcompany.com
Web: www.lmfcompany.com/cn

朗文坊有限公司於2015年在澳門成立。團隊在採購、飲食、服務及品牌營銷方面擁有專業知識。憑藉30多年的豐富經驗，為美酒收藏家、企業客戶及愛酒人士提供由頂級產地挑選的美酒。朗文坊於2018年與一群志同道合人士成立棋人創意貿易，致力發掘葡萄牙高質素產品及製作技術，結合澳門創意故事，開發獨有產品推廣至中國及亞洲，透過澳門「一中心一平台」國際定位，積極深化中國及葡萄牙的合作，以推動一帶一路計劃持續性發展。
LMF is founded in Macao in 2015. With over 30 years' experience, we offer knowledgeable service and impeccable provenance to wine collectors. LMF set up Chessman Innovation Trading in 2018, we discover quality Portugal products, create a unique style with local creativity. We sell them to China and Asia, consolidate the cooperation of China and Portugal, also impulse the development of B&R.

DIM點店飲食集團有限公司 / Dine in Macau

8.1B2-01(36)

Address: 澳门地区 澳門 Macao Macau
Tel: 15344800784
Email: shirleyxiaozi@gmai.com
Web:

DIM are import Portuguese food and beverages to China in a wide selection of quality products included wine, mineral water & salt.We had signed a cooperation framework agreement with Parras wine and Quinta dos Avidagos to promote their products into Mainland China with full service planning under our experienced team to local importers and resellers.

超然咖啡食品有限公司 / EXCELENTE COFFEE & FOOD PRODUCTS COMPANY LIMITED

8.1B2-01(40)

Address: 澳门地区 新口岸高美士街14號景秀商業中心3樓A座 Macao RUA LUIS GONZAGA GOMES NO.14, 3ANDAR A,EDF,KING XIU GARDEN,MACAU
Tel: （853）2870 3037
Email: leo@excelentegroup.com
Web: www.excelentegroup.com

超然咖啡廠為澳門本土咖啡廠房、本地生產商，從採購咖啡生豆、烘焙、包裝、運送、零售。公司自設的超然咖啡廠榮獲SGS ISO 9001：2008認證 成為一個信心、信譽的標誌。“蓮花”咖啡的宗旨是懷著對咖啡的熱情，結合國際化的生產管理系統，為廣大客戶服務。公司主要業務包括獨家代理法國威利來干邑、自家品牌波爾多圖盧茲莊園紅葡萄酒，精選英、美、西班牙各國等原裝進口糧油咖啡食品業務。
Excelente Coffee Factory, based in Macao. 100% manufactured, packed, and distribute from factory in Macao following SGS ISO 9001: 2008 management system. The vision of our brand "Lotus Cafe", is to serve our customers with international mafacture system and our passion in coffee.

Sociedad San Francisco Lo Garcés Ltda

8.1B2-03

Address: 智利 Chile Libertador G.B. O'Higgins-Rancagua-Fundo Santa Margarita SN, San Francisco de Mostazal
Tel: +86-21-24287861
Email: aison@ivcsun.com
Web:

We are producer and exporter of cherries and fresh fruit, recognized worldwide for the quality and consistency of our products. In business for over 50 years, we were the first Chilean company to export fresh cherries & other fresh fruit. We have 25 fruit production farms from Petorca to Angol, and a total of 2,200 hectares of company-owned farms.

Kingo / Frutacloud / Kingo Chile SpA.

8.1B2-04

Address: 智利 Chile Santiago-Av.Del Valle # 928. Oficina 503
Tel: 13162134378
Email: karen@frutacloud.com
Web: www.kingo.com.tw/www.frutacloud.com

As one of the largest produce traders in East Asia, We import over 50 commodities of fruit from 30 countries into China and Korea, providing a wide selection of products from around the world. We leverage our expertise in logistics to ensure only the freshest fruit is delivered to our clients.

都乐亚洲控股私人有限公司 / Dole Asia Holdings Pte.Ltd

8.1B2-05

Address: 新加坡 Singapore WALLICH STREET #32-01, GUOCO TOWER
Tel: 86-021-58485411*8630
Email: Vivian.wang@doleintl.com
Web: www.dole.cn

都乐品牌源于1851年，发展至今已成为世界上高品质果蔬供应商之一。都乐在菲律宾有超过30,000英亩的土地用于种植香蕉、菠萝和木瓜。都乐的鲜果在亚洲及中东的多个国家销售，在中国、日本、韩国等都自有或合作运营有香蕉催熟及冷藏配送中心。
Dole founded in 1851, is one of the high-quality fresh fruits and vegetables supplier. Dole produces bananas, pineapples and papayas on over 30,000 acres of land in the Philippines.

Favorita Trading Co. Ltd / Goodfarmer Foods Holding (Group) Co.,Ltd / Favorita Trading Co. Ltd.

8.1B3-02

Address: 英国 United Kingdom British Virgin Islands-Tortola-The Geneva Place, Third Floor, Road Town
Tel: 021-61082041 / +86-021-61082041
Email: lucas_zheng@goodfarmer.com
Web: www.favoritafruitcompany.com

Favorita continues developing its key business lines both domestically and internationally through its subsidiaries with the highest standards of quality. We market bananas, as well as dairy products, forestry products, African palm crops, fertilizers, agricultural supplies. Goodfarmer is one of most important partner of us, we cooperate in many fields, especially bananas.

龙港实业发展(香港)有限公司 / SDC(HONG KONG) CORPORATION LIMITED

8.1B3-03

Address: 香港地区 HongKong China UNIT C 17/F CNT TOWER 338 HENNESSY RD WANCHAI HK
Tel: 86-21-20978398
Email: tantian@shanghaidragon.com.cn
Web:

龙港实业发展（香港）有限公司成立于2012年，公司致力于将全世界最好的商品引入中国市场。放眼全球，我们选择了澳大利亚的食品、葡萄酒以及羊奶皂，意大利的葡萄酒，日本和德国的洗涤用品，埃塞俄比亚的咖啡，并希望可以从世界各地引进更多、更好的进口商品。
Established in 2012,SDC（HONG KONG）Corporation Limited is committed to import the best products worldwide to the Chinese market. With an eye to the the whole world, our company carefully selects food, wine and goat milk soap from Australia, wine from Italy, washing product from Japan and Germany,coffee from Ethiopia, and willing to present more imported products with a high standard overseas.

嘉吉 / Cargill

8.1B3-04

Address: 美国 明尼苏达州-Wayzata-15407 McGinty Road West United States of America Minnesota-Wayzata-15407 McGinty Road West
Tel: 021-33327696
Email: joyce_wang@cargill.com
Web: www.cargill.com.cn

嘉吉公司成立于1865年，是一家集食品、农业、金融和工业产品及服务为一体的多元化跨国企业集团，业务遍及70个国家，拥有员工155,000多名。嘉吉的使命是以安全、可靠和负责任的方式滋养世界。
Founded in 1865, Cargill is an international enterprise, providing food, agricultural, financial and industrial products and services. We have more than 155,000 employees in 70 countries and regions. Cargill is committed to nourishing the world in a safe, responsible, and sustainable way.

丰益国际有限公司 / WILMAR INTERNATIONAL LIMITED

8.1B3-05

Address: 新加坡 新加坡尼路56号 Singapore 56 neil road Singapore
Tel: 010-52177003
Email: zhangli@cn.wilmar-intl.com
Web: www.wilmar-international.com/home

丰益国际成立于1991年，是亚洲领先的综合型农业集团，2018年世界500强企业位列第248位。主要业务包括棕榈种植、油籽压榨、食用油精炼、食糖加工和提炼、日用消费品制造、专用油脂、油脂化学品、生物柴油和化肥制造，以及面粉和大米加工等。每年从世界各地进口到中国的的商品总货值超过100亿美元。丰益国际的策略核心是集成的农业模式，涵盖农业大宗商品业务的整个价值链，贯穿农产品栽培、加工、生产等领域。
Wilmar International Limited, founded in 1991 and headquartered in Singapore, is today Asia's leading agribusiness group. Wilmar is ranked amongst the largest listed companies by market capitalisation on the Singapore Exchange.

正大集团 / Charoen Pokphand Group

8.1B4-01

Address: 泰国 曼谷-Bangrak-C.P. Tower, 313 Silom Road Thailand Bangkok-Bangrak-C.P. Tower, 313 Silom Road
Tel: 010-85089085 / 86-10-85089085
Email: pengxi@cpgroup.cn
Web: www.cpgroupglobal.com

正大集团，在泰国亦称卜蜂集团，由泰籍华人谢易初、谢少飞兄弟1921年创办于泰国曼谷，英文为Charoen Pokphand Group，简称CP Group。正大集团是一家以农牧食品、商业零售、电信电视三大事业为核心，同时涉足金融、地产、制药、汽机车、机械加工等10 多个行业领域的多元化跨国企业集团，业务遍及100多个国家和地区，员工总数35万人，2018年集团全球销售总额约620亿美元。
Established 98 years ago by Mr. Chia Ek Chor, the Charoen Pokphand Group (C.P. Group) is a transnational conglomerate that consists of three core businesses that operate in the agribusiness and food, retail and distribution, and telecommunications industries with investments in 100 countries.

Zespri International Ltd.

8.1B4-02

Address: 新西兰 New Zealand Mt Maunganui, -400 Maunganui Rd
Tel: 13701889464
Email: john.li@zespri.com
Web: www.zespri.com

新西兰佳沛公司是全球领先的奇异果种植与销售商，由新西兰的奇异果种植者所拥有。由佳沛公司出产的美味而富有营养的新西兰奇异果，畅销全球50多个国家。佳沛拥有一个综合的营销体系，包括种植者、收获后的运营商、港口和航运公司、经销商、批发商和零售商之间结成的长期合作关系，各方都致力于为消费者提供最优质的奇异果。
Zespri is the leading global kiwifruit marketer, proudly owned by NZ kiwifruit growers. The delicious and nutritious kiwifruit produced by Zespri was sold in more than 50 countries around the world. It boasts an integrated marketing system that includes long-term partnerships between growers, post-harvest operators, ports and shipping companies, distributors, wholesalers and retailers. They are al.

新西兰新莱特乳业公司 / Synlait Milk Ltd

8.1B4-03(01)

Address: 新西兰 New Zealand 1028 HESLEKTON ROAD EAKAIA
Tel: 64 33733000
Email: donnie.xue@synlait.com
Web:

新莱特是一家创新型乳品加工企业。其总部位于新西兰坎特伯雷中心地区，在奥克兰和北帕默斯顿均设有分部。新莱特致力于将专业农业与最先进的加工技术相结合，生产出一系列健康、营养的牛奶制品，为消费者健康生活提供更优质产品。
Synlait is an innovative dairy processing company with our head office in the heart of Canterbury, New Zealand. We also have locations in Auckland, and in Palmerston North. We combine expert farming, with state-of-the-art processing, to produce a range of nutritional milk products that provide genuine benefits for health and wellbeing.

Bright Food Global Distribution Company

8.1B4-03(02)

Address: 澳大利亚 Australia New South Wales-Sydney-Level 11, 7 Macquarie Place
Tel: +61 2 9421 3220
Email: cbarclay@brightglobal.com.hk
Web: www.brightglobal.com.hk

Bright Food Global is diversified food group that operates across the Asia Pacific region. With origins dating back over 100 years, our brands and businesses continue to grow as we respond to the emerging trends in consumer tastes and innovation. We travel the globe in search of exceptional and exquisite food products that deliver flavour sensation.

Hijos de Carlos Albo S.L.U.

8.1B4-03(05)

Address: 西班牙 Spain Galicia-Vigo-Jacinto Benavente,41
Tel: 0034-986213333
Email: hdeng@albo.es
Web: www.albo.es

Hijos De Carlos Albo S.L.U (ALBO) is a food processing enterprise with a history of almost 150 years. It is the leading enterprise among the mid-to-high-end brands in the field of canned fish and tuna-related fast food. Its popularity and market share in domestic Spain ranks among the top 3.

ALTAMARE.SA

8.1B4-03(08)

Address: 阿根廷 Argentina Del Chubut-Madryn-Provincia-Parque industrial Pesquaro S/N
Tel: +542234240230
Email: shenjs66@126.com
Web:

Altamare.SA products Argentine red shrimp, Argentine shortfin squid and so on.

Hong Kong Huadu Investments Limited

8.1B4-03(09)

Address: 香港地区 HongKong China FLAT/RM 1701 17/F KEYBOND COMMERCIAL BUILDING NO 38 FERRY STREET JORDAN KL HONGKONG
Tel: 021-61102888
Email: lanhong@bre600708.com
Web:

Hong Kong huadu investment co., LTD. (hereinafter referred to as "Hong Kong huadu") was registered in April 1993 in Hong Kong, business license registration number 16483795-000-12-17-a, registered capital of 1 million Hong Kong dollars.

DISTRIBUTION INTERNATIONALE DE VINS ET ALCOOLS SAS

8.1B4-03(03)

Address: 法国 France Bordeaux-34 Quai de Bacalan
Tel: 0033620106819
Email: yali.wang@diva-bordeaux.com
Web:

DIVA公司成立于1979年，由于出产的葡萄酒品质优异、公司在波尔多迅速成为成功的主角。系统的管理使得公司在波尔多地区发展良好，并且成为众多国外的新出口渠道，也是法国最著名的第九大葡萄酒产业集团。公司总部位于波尔多，11家分公司分布在各名产区，供应来自全球的顶尖葡萄酒，包括法国、意大利、西班牙、阿根廷、南非、美国、澳洲、新西兰;另外包括投资级的波尔多61个名庄年份酒。
DISTRIBUTION INTERNATIONALE DE VINS ET ALCOOLS SAS ("DIVA" for short) was founded in 1979. Headquartered in Bordeaux, the company's 11 branches are located in various production areas, supplying top wines from around the world, including France, Italy, Spain, Argentina, South Africa, the United States, Australia, New Zealand; and investment-oriented Bordeaux 61 famous villages Vintage wine.

伊比利亚集成食品独资公司 / GENERAL MARKETS FOOD IBERICA, SAU

8.1B4-03(06)

Address: 西班牙 赫罗纳-比拉马亚-Polígono Empordá Internacional C/Germans Miquel s/n Spain Girona-Vilamalla-Polígono Empordá Internacional C/ Germans Miquel s/n
Tel: 021-54501033
Email: lei.shi@gmfood.es
Web:

西班牙伊比利亚集成食品公司（原名：米盖尔公司）创立于1925年，是以食品为主的分销批发、品牌运营及供应链管理的企业，拥有付现自提、批发零售、餐饮服务及批发出口四个业务板块，其中付现自提业务（Cash & Carry）在西班牙该细分市场中排名第二。目前，公司在西班牙加泰罗尼亚、巴利阿里群岛、巴伦西亚、卡斯蒂利亚、莱昂等11个自治区拥有68家付现自提门店，6个物流配送中心，公司拥有广泛的产品线，产品。
Founded in 1925, GM FOOD IBERICA (formerly known as Group Miquel) is a food-based distribution wholesale, brand operation and supply chain management company with cash, self-raising, wholesale and retail, catering services and Wholesale exports four business segments, of which Cash & Carry ranks second in this segment of Spain.

Silver Fern farms Limited

8.1B4-03(04)

Address: 新西兰 New Zealand Dunedin-Dunedin-283 Princes Street
Tel: 22866113
Email: sarahtwy@qq.com
Web:

银蕨农场是新西兰领先的牛肉、羔羊肉、羊肉、鹿肉及相关产品的加工商和销售商，其产品销往60多个国家。银蕨农场拥有14个肉制品加工厂遍布新西兰各地，员工超过7000人。银蕨农场由上海梅林有限公司和银蕨农场合作社共同所有，双方各占股50%。公司愿景：充满热情的人一起创造出无与伦比的美食。银蕨农场在北美、中国、英国和欧洲、亚洲、中东和新西兰等关键市场均设立国际办事处，为公司发展提供支持。
Silver Fern Farms is New Zealand's leading processor and marketer of beef, lamb, mutton, venison and associated products to more than 60 countries. The company operates processing facilities throughout the country, employing more than 7,000 staff.

延修国际贸易集团（株式会社）/ YANXIU International Trade Group Go,Ltd

8.1B4-03(07)

Address: 韩国 京畿道-广州市-五浦邑浦安路323 ROK(Republic of Korea) Gyeonggi-do-Opo-eup-323 Opoan-ro
Tel: 021-55669609
Email: yiqirencai@163.com
Web: www.yanxiukr.com

YANXIU国际贸易集团位于韩国京畿道广州市，具备完善的生产设备，是一家专业从事营养代餐食品和时尚化妆品生产的企业，公司与多家知名大学研究所合作，并设立了由专业研究人员组成的YANXIU附设研究所，公司推出系列健康、绿色、高级的减肥塑形食品，旗下有专业的生产团队，现代化的流水车间，管理严谨，精益求精，在业界享有良好的声誉。
Yanxiu international trade group co., Ltd is a company specializing in cosmetics and food products located in Gwangju, Gyeonggi-do, Korea. The branch is located in Shanghai, China, and Florida, the United States. We constantly try to make the best products in the world with a wide range of professional researchers in the field of cosmetics, health food and general food. We have five brands - YIBU.

光明食品国际有限公司 / Bright Food International Co., Ltd.

8.1B4-03(12)

Address: 香港地区 香港中环皇后大道中9号22楼2202-03室 Hong Kong Room 2202-03, 2222-03, 9 Queen's Avenue, Central, Hong Kong
Tel: 021-52290184
Email: durui@brightfood.com
Web:

光明食品国际有限公司（以下简称“光明国际”）由光明食品（集团）有限公司于2011年2月10日在香港全资注册成立，注册资本30,980万美元，是光明食品集团全资设立在香港的海外事业平台，在新加坡、欧洲均设立分支机构。我们从事各类国际化投融资业务，先后实施了对以色列最大食品公司Tnuva，意大利百年橄榄油企业Salov（收购主体为益民集团）等重大项目的兼并收购，并长期致力于并购企业的投后管理和境内外管控协同。
Bright Food International Co., Ltd.(hereinafter referred to as "Bright International") was wholly established by Bright Food (Group) Co., Ltd. in Hong Kong on February 10, 2011, with a registered capital of USD 309.8 million. Bright International has established branches in Singapore and Europe and engaged in a variety of international investment and financing business.

HEIDI CHOCOLAT S.A.

8.1B4-03(16)

Address: 罗马尼亚 Romania ILFOV-PANTELIMON-B-dul BIRUINTEI Nr.87,Judetul
Tel: 021-63297108-2911
Email: peterhuangyi@163.com
Web:

It was the year 1994 when Juerg Laederach, passionate Swiss Chocolatier and Entrepreneur set sails on a journey of exploration, in order to bring new opportunities to people here and to teach them the secret of the Swiss Art of Making Chocolate. Inspired by the famous little girl which, with her natural and innocent attitude, made people see the positive things in life, Juerg founded Heidi.

萬安（遠東）有限公司 / Million (Far East) Limited

8.1B4-03(19)

Address: 香港地区 香港新界葵涌嘉定路1-11號 Hong Kong Million Group Center, 1-11 Ka Ting Road, Kwai Chung, N.T., Hong Kong
Tel: 852 3588 8175
Email: kelvinchan@millionfareast.com
Web: www.millionfareast.com

萬安（遠東）有限公司於2001年成立，並致力發展本地冷藏食品貿易。持著不斷的堅持和努力，以及確切的經營策略，我們已成為香港地区及南中國地區中一間主要的冰鮮及冷藏食品入口公司。在快速增長的餐飲部門帶領下，以及新開發的高端餐飲業市場，我們的市場佔有率得到不斷的提升。在未來的發展，我們將會繼續努力搜羅更多元化的食材，為顧客提供更多、更廣、更貼心的服務。
Million (Far East) Ltd. was found in 2001, we began with local frozen trading business. With our dedicated strategy, our company becomes one of the key chilled and frozen food importers in Hong Kong, Macau, and Southern & Northern China Regions nowadays.

LIANGYOU GROUP (HONGKONG) LIMITED / LIANGYOU GROUP（HONGKONG）LIMITED

8.1B4-03(14)

Address: 香港地区 HongKong China hongkong-hongkong-UNIT (SH) 2 LG 1 MIRROR TOWER 61 MODY RD TST KL
Tel: 021-58766843
Email: panchx@shliangyou.com
Web:

良友集团（香港）有限公司于2015年10月14日在香港注册成立，主要从事进口采购业务（主要向海外供应商直接采购大豆）和部分代理进口业务等。
Liangyou Group (Hong Kong) Co., Ltd. is registered in Hong Kong on October 14, 2015. The company is mainly engaged in import procurement business (mainly purchasing soybeans directly from overseas suppliers) and some agency import business.

Tnuva Food Industries, Agricultural Co-Operative Association in Israel Ltd.

8.1B4-03(17)

Address: 以色列 Israel Petah Tikva-Kiryat Arie-21 Yagia Kapayim Street
Tel: 00972-52-2158310
Email: wqian@gmfintl.com
Web: en.tnuva.co.il

TNUVA Group is the largest leading food company in Israel, bringing every household throughout the country fresh dairy products, eggs, frozen vegetables, poultry, frozen pastries, beef, fish and more. With a $1.7 billion turnover, TNUVA is the leading food supplier in Israel; producing 1,000 different SKU's and supplying 7 million products each day to customers across the country.

Capespan

8.1B5-01

Address: 南非 South Africa Western Cape-Cape Town-PO Box 505
Tel: 27 21 912 1718
Email: adele@cgl.co.za
Web: www.capespan.com

Capespan is a leading global distributor, marketer and producer of fresh fruit. Capespan is equally focused on the needs our suppliers and market clients, connecting growers and retailers as efficiently and cost effectively as possible, enabling closer interaction between both ends of the supply chain and maximising their returns.

Natunola Health Inc

8.1B4-03(15)

Address: 加拿大 Canada 661 St. Laurence Street, f,inchester, Ontario (0C 2K0, Canada
Tel: 64159898-1467
Email: xlhan@gmfintl.com
Web:

本着尊重自然，提倡健康高品质的生活理念，Natunola Heaith Inc.于1997年在加拿大略省创建。经营至今，Natunola已经成为一家富有经验的制造商，生产的产品涵盖护肤行业和食品行业。Natunola还专门从事农业食品贸易和食品采购/批发等。Natunola与加拿大农部下的安大略省政府食品研究中心有长达10多年的合作经历，并于2008年因拥有的一项专利技术荣获加拿大优秀农产品杰出创新奖项。
Proudly owned and operated in Ontario, Canada, Natunola Health Inc- has been in business for over 20 years since 1997. The company is a highly experienced manufacturer of various ingredients for use in the cosmetic and personal care industry and value-added health food products for the health and wellness industry Natunola also specializes in agri-food trading and food sourcing.

SALOV S.p.A.

8.1B4-03(18)

Address: 意大利 托斯卡纳大区-卢卡-via Montramito 1600, 55040 Massarosa(Lucca) Italy Toscana-Lucca-via Montramito 1600, 55040 Massarosa(Lucca)
Tel: 13701638805 / 13916370962
Email: ymspdiw@163.com ymspmeifenj@163.com
Web: www.salov.com/en

Salov集团成立于1919年，总部和生产厂区位于意大利托斯卡纳的卢卡小镇。Salov集团运营旗下拥有Filippo Berio 和 Sagra 两大知名品牌，已有150多年的历史，是全球领先的专业生产和销售橄榄油的企业，也是意大利唯一一家拥有国际性橄榄油品牌的家族企业，具有典型地中海饮食文化的积淀和精湛工艺。
Salov was founded in 1919 in the province of Lucca, Tuscany, where it's based the Group's headquarters and production site. The Salov Group operates in the production and worldwide commercialization of extra virgin and olive oil both branded, under the Filippo Berio and Sagra brands, and unbranded, produced for private labels and industrial operators.

OLE FRUIT IMPORT-EXPORT,S L.

8.1B5-02

Address: 西班牙 Spain SEVILLA-SEVILLA-AVDA AVERROES, NUM.8, PUERTA 116, EDIFICIO ACROPOLIS OFICINA 116
Tel: 58389798-815
Email: jrh@shcsgp.com
Web: www.csgpchina.com

Ole fruit 是一家专注于新鲜水果出口的西班牙公司。我们成立于2014年。主要品牌包括Lucky Luna，Huella，Oh Smiles，Corona Gold。我们已经成为西班牙国内领先的柑橘类水果出口商。
Ole fruit is a Spain company specializing in the exportation of fresh fruit. We started our business adventure in 2014. The main brands we have are Lucky Luna, Huella, Oh Smiles and Corona Gold. We have become in the leading national exporter of citrus fruits.

Hoang Nam International Joint Stock Company

8.1B6-01(02)

Address: 越南 Vietnam Ho Chi MInh-109 Nguyen Thi Thap Street, Him Lam Residential Area, Tan Hung Ward, District 7,
Tel: +84-916879167
Email: huyen.ngo@songyen.com
Web: songyen.com

Hoang Nam has 11 years of history in manufacturing and exporting Nutrient Drink, Herbal Tea, Purified Bird's Nest Drink to many countries such as: Australia, Myanmar, Laos, etc. Song Yen Bird's Nest Brand is one of our successful brands that has achieved many awards, and also built up great reputation in Vietnam and other countries. Our products are qualified and always guaranteed.

Vietnam Agricultural Food products import-export jsc

8.1B6-01(03)

Address: 越南 Vietnam Hanoi-Hanoi-No. 12A, Lane 40, Tran Nhat Duat street
Tel: +8436343946
Email: hangmamay@gmail.com
Web: vafood.com.vn

Our business activities include: providing raw food ingredients to collective kitchens (company and school kitchens); research and develope new dishes which are delicious and good for health in order to serve customer's meal better. We have served over 20 primary and elementary school kitchens over past 4 years (approximately 20,000 individual customers each day).

MEKONG SEAFOOD CONNECTION CO., LTD.

8.1B6-01(04)

Address: 越南 Vietnam Ho Chi Minh-Ho Chi Minh-No. 9 - 15th Street, Khang Dien Residential Area, Phuoc Long B Ward, District 9, HCMC, Vietnam
Tel: +84 28 6280 5407
Email: hoang@mekseaconnection.com
Web: www.mekseaconnection.com

Mekong Seafood Connection Company – Meksea is recognized as the leading seafood distributor in Vietnam from 2010 and been distributing to over 80 markets in the world. Not only offer a reasonable price at highest quality, we aim to maintain and expand the long-term business cooperation with our partners by having firm commitment on delivery time and professional in services.

NAM VIET FOODS & BEVERAGE CO., LTD

8.1B6-01(07)

Address: 越南 Vietnam Binh Duong -BINH DUONG-994/1C Nguyen Thi Minh Khai Street, Tan Thang Town - Tan Binh Ward, Di An District
Tel: +84 2743 800 118
Email: ashley@vinut.com
Web: www.vinut.com.vn

The Nam Viet Foods & Beverage Co., LTD is 100% Vietnamese owned with 25 years of experience in the beverage field for local markets and the processing of goods for exporting companies in Vietnam. In the second quarter of 2016 the owner of Nam Viet F&B decided to expand to markets worldwide and rapidly conquer the trust of our clients from the first order through quality control.

VIET PEPPER COMPANY LIMITED

8.1B6-01(08)

Address: 越南 Ho Chi Minh city-Ho Chi Minh city-96 road no.6, Binh Trung Tay ward, District 2 Vietnam Ho Chi Minh city-District 2-96 road no.6, Binh Trung Tay ward,
Tel: +842837438200-103
Email: nhi.trinh@vietpepper.com.vn
Web: www.vietpepper.com.vn

We are spices manufacturer in Vietnam, we work directly with farmers, create substainable plantation, Organic cultivation. We are committed to grow and supply with high quality spices. Our spices were already exported to Europe, USA, Japan, Australia, Canada,...Both Organic and conventional, both in bulk and private label packaging.

BAZAN one member limited liability company

8.1B6-01(10)

Address: 越南 Vietnam Binh Phuoc-Binh Phuoc-village 7-thong nhat-bu dang
Tel: +84-0962717788
Email: hatdieubazanxk@gmail.com
Web: hatdieubazan.com

OUR COMPANY SPECIALIZES IN PRODUING THE BEST SALTED CASHEW NUTS IN VIETNAM. LOOKING FOR A CHINESE PARTNER. THANKS.

TH Food Chain JSC

8.1B6-01(13)

Address: 越南 Vietnam Nghe An-Vinh-Quang Trung ward,Nguyen Thai Hoc street, 166
Tel: 00842435739777
Email: an.tt@thmilk.vn
Web: vietnam,hanoicity,dongdaward,no9,b acabuilding,2thfloor

Benefitting TH Group while benefitting the nation. TH Group does not try ways to maximize its profit but make all efforts to harmonize the benefits "Human being is the subject of social and the power to decide the development of country. The development of physical, mental and soul of each individual is important. The country is strengthened when its citizens are physical & mentally healthy. Th.

A&B VIETNAM INVESTMENT JSC

8.1B6-01(14)

Address: 越南 Vietnam Vietnam-Ha Noi-No.45 Nguyen Son Quarter, Ngoc Lam Ward, Long Bien District
Tel: +84 904919090
Email: nhphuong@abvietnam.vn
Web: www.abvietnam.vn

Precursor is the leading unit of exclusive distribution of beverage and beverage brands in the North, with more than 20 years experience in distributing and marketing the A & B Investment Joint Stock Company in Vietnam. Has invested in the line of machinery and equipment and constantly improve to ensure the production process to market the quality beverage products.

QUANG NGAI SUGAR JOINT STOCK COMPANY

8.1B6-01(15)

Address: 越南 Vietnam Quang Ngai-Quang Ngai-02 Nguyen Chi Thanh
Tel: 84 02553 726 137 / +84 02553 726 137
Email: ngocdiep88k7@gmail.com
Web: www.qns.com.vn

Quang Ngai Sugar Joint Stock Company is the large company, operating multidisciplinary, multisectoral. With 17 plants, factories, and more than 50 kinds of products. With main products: White Sugar, Vinasoy Soy Milk, Dung Quat beer, Beverage, Confectionery, Glucoza and other products and services.

TRUNG NGUYEN

8.1B6-01(16)

Address: 越南 Vietnam Ho Chi Minh-82-84 Bui Thi Xuan Street ,Ben Thanh Ward, District 1
Tel: 15886433196
Email: 1243908358@qq.com
Web:

Trung Nguyen Legend Group was established in 1996 and has achieved breakthrough achievements under the leadership of the founder and chairman, Mr. Dang Le Nguyen Vu. It has supplied global summits such as APEC, World Economic Forum and exported to more than 80 countries. In 2017, Trung Nguyen Legend Group established a rep office in Shanghai, which was widely recognized by Chinese consumers.

广西蔡惠园食品有限公司 / 越南新华园食品加工责任有限公司

8.1B6-01(17)

Address: 越南 州成县-塑庄-安协社凤协邑1A号国道153号（安业工业区）Vietnam No. 153, National Road 1A, fengxieyi, Anxie Community, sou chong, Vietnam
Tel: 07712872896
Email: yhj1997hk@163.com
Web:

广西蔡惠园食品有限公司是越南新华园食品有限公司的中国运营总部，以经营“新华园”系列产品为主，其他东南亚特色产品为辅，扎根绿城南宁，深耕全国市场。公司“新华园”系列产品已经得到广大消费者的认可和厚爱，我们本着一贯坚持“诚信经营、货真价实”的经营理念，我公司将一如既往以高品质的产品和优质的服务竭诚为您服务!
越南新华园食品有限公司以经营“新华园”系列产品为主，其他东南亚特色产品为辅，中国总运营部扎根绿城南宁，深耕全国市场。公司“新华园”系列产品已经得到广大消费者的认可和厚爱，我们本着一贯坚持“诚信经营、货真价实”的经营理念，我公司将一如既往以高品质的产品和优质的服务竭诚为您服务!

BEN TRE IMPORT EXPORT JOINT STOCK CORP.

8.1B6-01(18)

Address: 越南 Vietnam Hồ Chí Minh-HO CHI MINH-No. 75, April 30th Street, Ward 3, Ben Tre City, Ben Tre Province
Tel: (+84) 82 954 3632 / (+84) 1800585871
Email: nhipt@betrimex.com.vn
Web: www.betrimex.com.vn

Ben Tre Import and Export Joint Stock Corporation (Betrimex) has been established since 1976, undergoing a journey with more than 40 years of formation and development, Betrimex has marked steady advances in its own position as the leading entity in manufacturing and exporting coconut. Our main products are coconut water, coconut milk, coconut oil, coconut cooking cream, desiccated coconut.

LUONG QUOI COCONUT CO., LTD

8.1B6-01(21)

Address: 越南 Vietnam Ben Tre province-Chau Thanh district-An Hiep industrial park
Tel: +84 2753626319
Email: phuongquang@luongquoi.vn
Web:

We are the biggest manufacturer of coconut product in Viet Nam. We have many kind of coconut product such as: UHT coconut water, Canned coconut water, coconut cream, extra virgin coconut oi, refined coconut oil, desiccated coconut, toasted coconut chips. For currently, the company's products are exported to over 30 countries in all over the world.

TOPFOOD Joint Stock Company

8.1B6-01(22)

Address: 越南 Vietnam Hanoi-No. 5 Hoang Quoc Viet
Tel: 842432121523
Email: topfoodjsc@gmail.com
Web:

TOPFOOD High Quality Confectionery Joint Stock Company (TOPFOODS JSC) is one of the leading companies in the field of producing confectionery and food in Vietnam. TOPFOOD brand is increasingly enhanced and proved prestige in the market of confectionery and food. The scale of the company is increasingly being expanded with modern production lines, achieving European standards.

TMS TRADING JOINT STOCK COMPANY

8.1B6-01(23)

Address: 越南 Vietnam Ha Noi-Ha Noi-3rd Floor, Vimeco Building, Lot E9, Pham Hung Street, Trung Hoa, Cau Giay district
Tel: +842473012888
Email: tracy@tmsfood.vn
Web: tmstrading.vn

TMS TRADING JOINT STOCK COMPANY focus on importing the best quality foods from all over the world such us wine, functional food from Australia, Japanese whisky, salmon & icewine from Canada, Maotai from China. At the time, we export products that Vietnam has advantages such as fruits, tea, rice, coffee, pepper, cashew nut, agricultural & fishery products to the world

Chanh Viet Long An JSC

8.1B6-01(24)

Address: 越南 Vietnam Long An-Ben Luc-888Km34+100, Route N2
Tel: 842838488285
Email: info@chanhviet.com
Web: chanhviet.com

Chanh Viet farm has expanded to more than 150ha, becoming the largest seedlesslime farm in the Melkong Delta. Chanh Viet company has applied a closer-procedure production process from seedings to end product, creating green, safe, high quality and healthy products for consumers.

TIEN THINH AGRICULTURE PRODUCT PROCESSING ONE MEMBER LIMITED LIABILITY COMPANY

8.1B6-01(25)

Address: 越南 Vietnam Hau Giang-Phung Hiep-My Phu Village, Tan Phuoc Hung Ward, Phung Hiep Dist
Tel: 84 2923 730997
Email: sales@tienthinh.vn
Web: www.tienthinh.vn

Tien Thinh is one of the prestige manufacturers and exporters fruit puree and concentrate from tropical fruits such as Soursop, Mango, Calamansi, Lime, Dragon fruit, Passion fruit, Noni fruit, ···with over 10,000 MT finished products per year. We have been already approved by BRC, HACCP, ISO 22000, HALAL, KOSHER, GLOBAL G.A.P, SEDEX and FDA. We have exported our products to US, EU, Africa, Asia,...

TKK Foods Joint Stock Company

8.1B6-01(26)

Address: 越南 Vietnam Ha Noi-Hoang Mai-26B/35/141, Nam Du, Linh Nam
Tel: +84985073901
Email: Export1.tkkfoods@gmail.com
Web: greenfoodvietnam@gmail.com

TKK Foods was newly set up in 2018. We specialized in exporting confectionery products. We are looking for a distributor in China.

長皇林同貿易服務有限公司 / Truong Hoang Lam Dong Trading & Service Company Limited

8.1B6-01(27)

Address: 越南 Vietnam Lam Dong-Duc Trong -Phu Hoi Industrial Zone, Phu Hoi Commune
Tel: +886 937796770 / +842633844207
Email: clara@truonghoanglamdong.com.vn sales-assistant3@ truonghoanglamdong.com.vn
Web: thld.com.vn

长皇为越南专业百香果產品生产商,专门生产百香果浓缩汁,单倍汁,原浆,带籽原浆,香精,百香果干等。We are passionfruit juice manufacturer located in Vietnam, specializing in Passion Fruit juice Concentrate, Single Strength, Puree, Pulp with Seeds, Aroma, and Dried passionfruit.

International Dairy Products Joint Stock Company

8.1B6-01(28)

Address: 越南 Vietnam Ha Noi-Km 29, National Road 6, Truong Yen Commune, Chuong My District
Tel: +84 28 6291 8520
Email: huan.lunguyen@idp.vn
Web: www.idp.vn

Established in 2004 with 1 factory in Chuong My - Ha Noi. Launched 2nd factory in Ba Vi - Ha Noi by 2010. The 3rd factory established in Cu Chi - Ho Chi Minh City by Apr 2013. Invest 30 bn VND to build a stardard cow farm and supply >400 calves to farmers 35 bn VND funding to farmers for cow farm development.

NAPOLI COFFEE PRODUCTION TRADING IMPORT AND EXPORT JOINT VENTURE COMPANY

8.1B6-01(29)

Address: 越南 Vietnam Ho Chi Minh-No. 11 TK3 Road, Tien Lan Hamlet, Ba Diem Commune, Hoc Mon District, Ho Chi Minh city, Vietnam
Tel: +84-1900636064
Email: napolivietnamcoffee@gmail.com
Web: www.napoli.vn

Vietnam Coffee producer with more than 20 years of experience. Our products: roasted coffee bean, roasted and ground coffee, 2 in 1 instant coffee, 3 in 1 instant coffee, 4 in 1 instant coffee, 6 in 1 instant cacao. We are the famous company in franchising coffee shop with more than 1500 coffee shops in Vietnam.

TAK SERVICE AND TRADING COMPANY LIMITED / Tan An Khang Trading and Service Co., Ltd

8.1B6-01(30)

Address: 越南 Vietnam Dong Nai-Bien Hoa-A2 Vo Thi Sau Street, Ward. Quyet Thang,
Tel: +842513846846
Email: suong@shevia.net
Web: www.shevia.net

- Shevia Vietnam specialize in production and distribution of medicines, advanced functional foods for local market and abroad market. OPERATION - Established in 2004, in the first stage, Shevia specializes in providing medical equipment, medical supplies for hospitals and clinics - Operation and development until 2011, Shevia continues further to develop the field of production and distribution.

Moocos Viet Nam Co., Ltd

8.1B6-01(30)

Address: 越南 Vietnam Hai Phong-An Duong District-Van Xa Hamlet, Quoc Tuan Comune
Tel: +84-225-3265-988
Email: gac.vu@moocos.com
Web: moocos.com

MOOCOS Viet Nam is a company focuses on Gac. Our products are diversified such as Gac oil, Gac powder, Frozen Gac puree, Sterilized Gac puree, Gac oil capsule, Gac jam and Gac seed. Our main market is US, EU, Japan, Korea, Thailand and China. At the present, we are always looking for new customers from other areas.

TVFood Co., Ltd.

8.1B6-01(31)

Address: 越南 Vietnam An Giang Province-Cho Moi District-Nhon Hoa hamlet, Nhon My commune
Tel: 00842838661797
Email: info@tvfood.com.vn
Web: www.tvfood.com.vn

TVFood Co., Ltd. is always proud of being one of the best manufacturers of safe rice in Vietnam, we satisfy the national standards of rice business and gain international certificates such as HACCP, ISO22000, BRC, etc. We have been delivering our products to the local market and many countries over the world.

Hoang Hau Dragon Fruit Farm Co., Ltd

8.1B6-01(31)

Address: 越南 Binh Thuan-Phu Sum hamlet, Ham My commne, Ham Thuan Nam District Vietnam Binh Thuan province,-Phu Sum hamlet, Ham My commune, Ham Thuan Nam district,
Tel: +842523898616
Email: hoanghau@hoanghau.com.vn
Web: hoanghau.com.vn

Established in 1988 by farm model, Hoang Hau Dragon Fruit Farm Co., Ltd has been the leading business in producing and trading Dragon Fruit for export in Vietnam. Beginning the career with 3 ha of wild land only used to plant Dragon Fruit and some short-term vegetables, Hoang Hau has owned 100 ha of land by 2003 in which 70 ha are used to plant Dragon Fruit. Hoang Hau which is the first farm produ.

Vietnam Vinapro Import Export and Production Joint Stock Company

8.1B6-01(32)

Address: 越南 Thanh Tri-Van Dien-No 39/265 Ngoc Hoi Str., Vietnam Hanoi-Van Dien-No 39/265 Ngoc Hoi Str
Tel: +84-4-36816331
Email: sales03@vinapro.com.vn
Web: vinapro.com.vn

越南Vinapro进口-出口和生产加入股份公司成立于2005年,专门从事农产品的生产和出口。拥有多年经验的农产品/咖啡豆,辣椒,肉桂,八角,干姜,腰果,莲子,开心果在国际市场上的制造商和出口商。Vietnam Vinapro Import - Export and Production Join Stock Company was set up at 2005 specializing in Production and Export of Agricultural products. With many years of experience Manufacturer and exporters in the field of Agricultural products/ Coffee beans, Pepper, Cinnamon, Star anise, Dried Ginger, Cashew nut, Lotus seed, Pistachio in the international market.

NGHI SON AQUATIC PRODUCT IMPORT EXPORT CO,.LTD

8.1B6-01(33)

Address: 越南 Vietnam Ho Chi Minh-01 District-7th Floor, 85 Nguyen Huu Cau Street, Tan Dinh Ward, Dist 01, Ho Chi Minh City Viet Nam
Tel: (+84)28 399 77 395
Email: minh@nghisonfoodsgroup.com
Web: nghisonfoodsgroup.com

We would like to introduce that we are Nghi Son Group (Nghi Son Food Jsc & Nghi Son Aquatic Products Exim., Ltd). We are supplier and exporter frozen seafood and Agricutural from Viet Nam. With more than 30 years experience and family tradition in seafood business we know how to manage and give best supply chain from catching raw material, transporting, freezing, packing to delivering finished

U.S. Soybean Export Council

8.1B6-02

Address: 美国 United States of America Missuori-Chesterfield-16305 Swingley Ridge Road, Suite 200
Tel: 010-65051830
Email: lzhao@ussec.org
Web:

The U.S. Soybean Export Council (USSEC) is a non-profit membership organization initiated by the American Soybean Association (ASA) and the United Soybean Board (USB) to conduct international marketing programs for the U.S. soybean producers, commodity shippers, merchandisers, allied agribusinesses and agricultural organizations. USSEC is headquartered in St. Louis, Missouri.

Sarah Baartman District Municipality

8.1B7-01

Address: 南非 South Africa Eastern Cape-Port Elizabeth-32 Govern Mbeki Ave
Tel: +27-837836688
Email: albertyu@cacadudevelopment.co.za
Web:

莎拉巴特曼市是南非著名的旅游大市和主要的农产品产区,下辖7个地级市。出口农产品在国际上享有盛誉,特别是马海毛、牛羊肉、橙类水果和芦荟产品等。
Sarah Baartman District Municipality is famous for its tourism and agricultural in South Africa, which covering 34% of the entire Eastern Cape Province's geographical footprint, include 7 local municipality. Mohair, beef and mutton, citrus fruits and Aloes export makes the Sarah Baartman recognised by the international markets.

Agency for Viticulture and Wine Development

8.1B7-02(02)

Address: 乌兹别克斯坦 Uzbekistan Tashkent-Tashkent-Uzbekistan, Tashkent city, Abay street, 6
Tel: +998712442756
Email: ibraimkhodjaev@gmail.com
Web: www.vinsanoat.uz

Elite Food Group / Elite Food Group

8.1B7-02(05)

Address: 乌兹别克斯坦 Uzbekistan Sayram 7 narrow street 58 house -Mirzo Ulugbek district-Tashkent city
Tel: +99871 268 33 58
Email: coretto2017@mail.ru
Web: www.coretto.uz

CORETTO produsing of mayones, souse, ketchup,cheese

Garden House LLC

8.1B7-02(03)

Address: 乌兹别克斯坦 Uzbekistan Samarkand-52, Samarkand street,141300. Payarik district
Tel: +998954204004
Email: sardor.mahmudov@gardencells.com
Web: www.gardencells.com

GardenCells is a young and prospective team of specialists, one of leading player and reliable partner for the export of dried and fresh fruits in the market of Uzbekistan and Asia. We produce and supply dried fruits and fresh fruits by own, and we managing how to set up business processes in such a way that the client does not spend time to searching for quality products and delivering them.

TINA CATERING LLC

8.1B7-02(04)

Address: 乌兹别克斯坦 Uzbekistan Republic of Uzbekistan-Tashkent-128A, Beshqayragoch street, Uchtepa district
Tel: +998712739569
Email: abdujalilovahror@gmail.com
Web:

Exporter of agruculture products.

INTER PLAST TASHKENT Ltd. Co.

8.1B7-02(08)

Address: 乌兹别克斯坦 Uzbekistan tashkent-Tashkent-140/1, Urikzor str.
Tel: +998951440047
Email: interplasttashkent@mail.ru
Web: www.oshpaz.uz

Inter Plast Tashkent Ltd. Co. is specialized in manufacturing of food products, tin cans for packing up the foods/beverages.

AGRO FAROVON ZAMIN LLC

8.1B7-02(09)

Address: 乌兹别克斯坦 Bulungur-Samarkand-Yangikurgan village Uzbekistan Samarkand region-Bulungur District -Yangikurgan village
Tel: +988979114777 / +998902243000
Email: Agrofaravon@gamil.com Agrofaravon@gmail.com
Web: www.agrifarovonzamin.uz www.agrofarovonzamin.uz

AFZ an enterprise the main activity of which is growing of agricultural crops, their sales in a fresh and recycled form.

私营企业VITA BREVIS GROUP / Private enterprise VITA BREVIS GROUP

8.1B7-02(10)

Address: 乌兹别克斯坦 塔什干-塔什干-乌兹别克斯坦共和国 Uzbekistan Tashkent-Tashkent-Republic of Uzbekistan, Tashkent, Yunus-Abad district st. Halk Abad 44
Tel: +998974328808
Email: ravshan703@gmail.com
Web:

私营企业"VITA BREVIS GROUP"是一家贸易公司,于2017年成立。我们的合同农民为我们提供乌兹别克斯坦美丽自然种植的作物。今天我们与我国干果生产商合作,销售成品包装产品。乌兹别克斯坦。我们购买的商品是用高质量的设备制造的。
PRIVATE ENTERPRISE "VITA BREVIS GROUP" is trading company eatablished in 2017. Our contract farmars supply us with the crops grown in the beautiful nature of Uzbekistan.Today we cooperate with manufacturers of dried fruits in our country and sell finished packaged products in the territory of Uzbekistan. The goods we buy are made on high-quality equipment.

ORIENTMAX TRADE LLC

8.1B7-02(11)

Address: 乌兹别克斯坦 Uzbekistan TASHKENT-Omazar district street Chukursai passage2 house 96
Tel: +998781505010
Email: orient.max@mail.ru orient.max@yandex.com
Web: finchuza.uzmarshmallow.uz

marshmallow and corn noodles.

CLASS FOOD SERVIS

8.1B7-02(12)

Address: 乌兹别克斯坦 Uzbekistan Tashkent
Tel: +998909072900
Email: uzhahongir@mail.ru
Web: www.class-food.uz

chocolate production.

SIKAI LTD

8.1C1-05

Address: 巴布亚新几内亚 Papua New Guinea P.O.Box,370,Lorengau,Manus Province,Paua New Guinea
Tel: 74385492 / 00675 74385492
Email: 2959167974@qq.com
Web:

The SIKAI business objective in Papua New Guinea is to provide a clear avenue for provision of goods and services to overseas .We remove the logistical challenges to ensure a smooth odering process .SIKAI has over 20 years of experience in marine products like Beche-De-Mer, Live crabs, and Live lobsters etc.

LLC «Interprice Corporation»

8.1C1-09

Address: 乌克兰 Ukraine Ukraine-Odessa-5th Aeroportovsky line, 2, 65033
Tel: 021-35380188
Email: chenjingzhe@luckline.net
Web:

1. LLC«Interprice Corporation» is an industrial group company with integrated production and marketing. The company is located in Odessa City, near the coast of the Black Sea, and less than 100 kilometers from the port. Mr. Lunzhi he, the founder of the company, is also the president of Odessa China Chamber of Commerce in Ukraine.
2. The group company has production and processing bases of edible.

AAFUD INDUSTRY (NIGERIA) CO., LTD

8.1C1-12

Address: 尼日利亚 Nigeria LAGOS-LAGOS-7/9 AGBAOKU STREET, OFF OPEBI ROAD, LAGOS, NIGERIA
Tel: +86-756-337-0121
Email: aafud@aafud.com aafud7@aafud.com
Web: www.aafud.com.ng

AAFUD INDUSTRY (NIGERIA) CO., LTD was established in 2018 as a subsidiary of AAFUD GROUP. We are located in Ikeja, Lagos, Nigeria. Our goal includes the production and sales of Natural colors, Food flavors and other Food ingredients. Our products communicate the message of both health and happiness to our customers.

Salicofood LLC

8.1B7-02(13)

Address: 乌兹别克斯坦 Uzbekistan Tashkent-Tashkent-Yunusabad District, Osiyo6 st, office 82
Tel: +998909040068
Email: salicofood@mail.ru
Web: www.salicotrade.com

Exporting of Agriculture products, Foods, supplementary products, sweets and others.

SENGHORK

8.1C1-06

Address: 澳大利亚 墨尔本-墨尔本-46 dingley ave dandenong 3175 Australia Melbourne-46 dingley ave dandenong 3175
Tel: 0435340256
Email: peter@great-longistics.com
Web: www.senghork.com.au

新发食品有限公司于1989年在克莱顿南部开设了一家店面，为墨尔本及周边地区的当地消费者、餐馆和中国杂货商供货,公司目前位于丹德农商业区，不仅在墨尔本，还在珀斯、悉尼、阿德莱德和新西兰等地为大型零售连锁店、餐馆和中国杂货商供货。想知道更多关于公司的信息，请访问我们的网站：www.senghork.com.au

Seng Hork Pty Ltd currently located in Dandenong commercial precinct, Seng Hork has made a name for itself in food manufacturing, supplying major retail chains, Chinese grocers, and restaurants, not only in Melbourne, but also in Perth, Sydney, Adelaide, and New Zealand. To know more about Seng Hork please visit our website: www.senghork.com.au

JAMONES ALJOMAR S.A.

8.1C1-10

Address: 西班牙 Spain Salamanca-Guijuelo-C/ Rio Duero s/n Pol. Ind.1.2 37770
Tel: （0151）43100566
Email: minminhuang@imp.com minminhuang@imp-city.com
Web:

Aljomar是西班牙最知名的伊比利亚火腿公司，公司目前出口到全球超过25个国家和地区，是西班牙唯一的一家拥有自己的牧场Vera vieja，自己的饲料生产厂，自己的屠宰场El Navazo和自己的火腿制作工厂为一体的公司。公司有着一套完善的生产链，可以极大程度的控制产品质量。其中屠宰场El Navazo拥有西班牙最现代化的屠宰设备，每天可以涂在超过6000伊比利亚黑猪。

Aljomar is the best-known Iberico ham company in Spain, which founded by Afonso and his wife Carmen. The company currently exports to more than 25 countries and regions around the world. The company is the only one in Spain that includes its own ranch--Vera vieja , feed factory, abattoir--El Navazo and ham factory. The company has a complete set of production chain, which can greatly control the q.

加拿大北极食品集团 / Arctica Food Group Canada Inc.

8.1C1-04

Address: 加拿大 魁北克-宝萨-凯帝大道8888号 Canada Quebec-Brossard-8888 du Quartier Blvd
Tel: 0411-83645962 / 1-450-659-7788
Email: infocn@arcticafood.com paul.in@arcticafood.com
Web: www.arcticafood.com

ARCTICA FOOD 源自加拿大，是加拿大野生海参领军品牌。我们在产品开发升级方面积累了丰富经验,尤其专注于开发高品质绿色食品和健康保健品，及专为中国市场需求定制产品。我们得到了政府和行业组织的广泛认可、积极支持与配合，更将致力于为中加经济贸易、文化交流及多领域合作提供更广阔和可靠的平台。

ARCTICA FOOD, from Canada, is the pioneer and leading brand in Canadian wild sea cucumbers. Having gained a rich experience in product development and innovation, we specialize in high value green food and supplements and offer customized products that target the Chinese market's needs. We aim to create a trustworthy platform to promote and fulfill China-Canada trade and cultural exchanges.

Brazilian Association of Animal Protein

8.1C1-08

Address: 巴西 Brazil SP-São Paulo-Av. Brigadeiro Faria Lima
Tel: +55 11 3095-3120
Email: nayara.dalmolin@abpa-br.org
Web: www.abpa-br.com.br

Companies and organizations in the poultry, pork and egg agro-industrial chains across Brazil joined to create the Brazilian Animal Protein Association – ABPA, which resulted from the union of the Brazilian Poultry Association (UBABEF) and the Brazilian Pork Producers and Exporters Association (ABIPECS).

LONG-SHINE IND.ENT.LTD

8.1C1-11

Address: 香港地区 HongKong China FLAT/RM A BLK 1 22/F JUPITER TERRACE 18 JUPITER ST NORTH POINT
Tel: 020-38798101
Email: longshine_gzb@163.com
Web:

Long-Shine Industry Enterprises Limited Company has been engaged in import and export trade for many years. We have raw materials of agricultural products and abundant food resources in African countries.

Sia Green Hive

8.1C1-13

Address: 拉脱维亚 Latvia Vandzenes pag-"Saulites"-1
Tel: +37125581491
Email: leldesaulina@inbox.lv export.greenhive@gmail.com
Web: www.greenhive.lv,facebook/vedumedu.lv,facebook/greenhive

Green Hive is a beekeeping company, producing honey products,natural berry juices,syrups and many more. We support the idea of green living, this belief has been put into the whole producing process, showing our attitude to life- to live in harmony with nature and use natural products. Our idea is to give your favorite honey a new and unique taste with the added value of berries and spices.

ORIENTAL GOLDEN COCO,INC

8.1C1-14

Address: 菲律宾 Philippines Davao Oriental Mindanao- City of Mati-Sitio Bitan-agan, Brgy Dahican
Tel: +63-9177188658
Email: sheeryhe.ogci@yahoo.com
Web: www.orientalgoldencoco.com

Oriental Golden Coco,Inc 自2000年以来一直从事椰子加工业。我们现在是菲律宾最大的椰子产品制造商之一。我们的产品包括：椰蓉，椰浆，椰奶，椰子水，椰子面粉和初榨椰子油。我们的椰子产品不仅适用于零售市场，还专门用于糖果和食品工业，主要用于增加风味和健康成分。我们的产品已经出口到亚洲，澳大利亚，欧洲和美国。作为一家国际公司，我们遵守国际标准，保持产品质量和产品多样化。

Oriental Golden Coco,Inc has engaged in coconut processing industry since 2000. We are now one of the biggest coconut product manufacturers in Philippine.Our diverse portfolio of products include: desiccated coconut, coconut cream, coconut milk, coconut water, coconut flour and virgin coconut oil. Our coconut products are also specialized for Confectionery and Food Industry for good ingredient.

NAC Trading Ltd

8.1C1-15

Address: 新西兰 New Zealand Wellington-Churton Park-15 Cheetwood Street
Tel: 0064 4 9765686
Email: barbara.zhang@nactrading.co.nz
Web: www.nactrading.com

本公司拥有丰富稳定的产品供应链和卓越的管理团队，所经营新西兰高质量的蜂蜜保健品，葡萄酒，牛羊肉和海产品等系列产品出口到世界各国，广受赞誉。

Initially our business was mainly importing food and groceries from China (we are an approved supplier to Foodstuffs). More recently our focus has been in exporting logs, lamb, sawn timber, wine, honey, health products, and seafood. We have also recently started exporting lamb and logs from Australia, and are actively looking for further opportunities to grow our business further.

Sunfarm Products Ltd

8.1C1-16

Address: 加拿大 Canada BC-Vancouver-1155-409 Granville Street
Tel: +1 7783798888
Email: anderson@sinovacorp.com
Web: www.sunfarmproducts.com

SunFarm Products Ltd. offers a diversified portfolio of natural and healthy packaged food products/ingredients to China and peripheral markets. We also offer customized private label and logistic solution. Believe in "Food Matters" Passionate in building the value chain from farm to table Committed to select healthy and gourmet products across the world.

Prismotrova M.G.

8.1C1-17

Address: 俄罗斯 列宁格勒-圣彼得堡-Sizova prospekt 25, apt. 612 St Petersburg, 197349 Russia Russia Leningrad - St. Petersburg-Sizova prospekt 25, apt. 612 St Petersburg, 197349 Russia
Tel: 0079219415287
Email: mprismotrova@gmail.com
Web:

The company founded in 2011 in St Petersburg, Russia. Specializes on production and export sales of packed top quality wheat flour, ice cream and honey, the traditional russian hits under own trade mark.

Inversiones Aguas Blancas SpA

8.1C1-18

Address: 智利 Chile CORONEL PEREIRA 72,OF.701 LAS CONDES,SANTIAGO CHILE
Tel: +86 21 64696999
Email: rachel.he@tewoo-luckyworld.com
Web:

we have a long and stable partnership with a number of famous chilean seafood fishing companies and plantations. we aim to take natural and pollution-free and delicious food origin from southern hemisphere to millions of chinese families.

我司与多家智利著名海产捕捞公司以及种植园有长期稳定的合作，我们要把原生态、无污染的南半球美味从原产地带给中国的千家万户。

主营地天然提取物有限公司 / Main Camp Natural Extracts Pty Ltd

8.1C1-19

Address: 澳大利亚 Australia NSW-MYRTLE CREEK-840 MAIN CAMP RD
Tel: +61 2 6661 7966
Email: ading@mcne.com.au
Web: mcne.com.au

Established in the late 1980's, Main Camp is known for being the longest standing, sustainable, commercial tea tree plantation in the world and for supplying the natural seed stock that commenced a flourishing tea tree industry. The property was privately acquired in 2010 by the current owners who established Main Camp Natural Extracts to promote their ownership and to identify the business's expa.

AKVIA OIL

8.1C1-20

Address: 乌克兰 Ukraine AKADIMIKA FILATOVA STR.,BUILD 10,OF.,2/34 KYIV
Tel: +38564040199
Email: manager.op11@dc-dask.com
Web:

AKVIA OIL is a model for enterprises to strive to improve their work level, hope to continue to develop, create outstanding results and improve their work skills. As one of the largest manufacturers of refined sunflower seed oil in Ukraine, AKVIA OIL uses the latest technology, both in the industrial field and in the field of quality and employee control.

Eshine Agricultural Planting CO.,LTD

8.1C1-21

Address: 肯尼亚 内罗毕-内罗毕-NO.15，Akila 3rd,Popo Road, Nairobi,Kenya Kenya Nairobi-NO.15，Akila 3rd,Popo Road, Nairobi,Kenya
Tel: +254716033088
Email: li_changhong@icloud.com
Web:

目前主要的农产品有芦荟、除虫菊、辣木和鲜花，是肯尼亚最大的芦荟膏出口商,最大的除虫菊出口商、最大的辣木种植园和出口商，通过和农户的紧密合作，预计到2019年底，会种植超过3万亩的芦荟、1万5千亩的除虫菊、1000亩的辣木。公司正在申请肯尼亚亦善农产品出口加工区，在种植园附近，已经购买了17500多平方米的工业用地，用于加工区的第一期建设，2019年9月已经开始施工，计划于2020年底建设完毕。

The main agricultural products are aloe Vera gum, pyrethrum, moringa and rose. The company is the largest exporter of aloe Vera gum, pyrethrum ,and moringa as well as the largest planter of moringa in Kenya. In close cooperation with the farmers, the company is expected to plant more than 5,000 acres of aloe Vera, 2,500 acres of pyrethrum, 1,000 mu of moringa.

Gardencity Trading Ltd. / Greenfields Agriculture Corporation

8.1C1-22

Address: 加拿大 Canada Saskatchewan-Saskatoon-1332 8th Street East
Tel: 13065000035
Email: sufrank@hotmail.com
Web: www.greenfieldsagriculture.ca

加拿大绿地农业位于加拿大的“世界粮仓”萨省。我们的理念是“健康的土壤生产出健康的食品，健康的食品带来身体的健康”，力争把每一款产品做到极致，全程可追溯。公司产品包括健康食品（野米、蜂蜜、燕麦片、燕麦米、蜂蜜、冰酒、桦树茸、亚麻籽油、非转基因菜籽油等）和初级农产品（豌豆、亚麻籽、小麦等）。

Greenfields Agriculture Corporation is specialized in exporting Canadian health foods (wild rice, honey, quick oats, steel cut oats, flax oil, non-GMO canola oil, chaga, ice wine, etc.) and agriculture commodities (peas, flax seeds, wheat, canola seeds, etc.).

塞拉利昂投资与贸易发展有限公司 / Sierra Leone Trade and Investment Development Limited

8.1C1-26

Address: 塞拉利昂 84 Lumley Beach Road,Freetown Sierra Leone 84 Lumley Beach Road,Freetown,Sierra Leone
Tel: 13811316538
Email: readsend@sohu.com
Web:

Sierra Leone Trade and Investment Development Co., Ltd., established in September 2018, is the only platform entrusted by Mr. Bio, the President of the Republic of Sierra Leone, responsible for trade and investment cooperation in Asian countries and regions. The company owns a large number of mineral and agricultural resources in Sierra Leone.

佳朗食品（加拿大）有限公司 / Jayland Naturals Canada Ltd.

8.1C1-32

Address: 加拿大 Canada BC-Vancouver-#312-6279 Eagles Drive
Tel: 0411-87314635
Email: Howard@jayland.cn
Web: www.jaylandnaturals.com

Jayland公司创立于1997年，总部位于加拿大温哥华，历经20多年的耕耘，已经发展成为集农产品种植、贸易及深加工一体化管理的集团公司。公司在加拿大萨省拥有亚麻籽、豌豆、鹰嘴豆等农产品种植基地，在卑诗省拥有果干及天然食用油生产基地，产品覆盖高端食用油、冻干蓝莓、冻干蔓越莓、藜麦、野米等天然健康产品。销售覆盖全球50余个国家和地区，同数百万客户建立贸易合作关系。

Jayland was founded in 1997. We are based in Vancouver, BC. With the consistent innovation and the sense of the supremacy of the quality, it grew fast into a group of company which covers farming, trading and agriculture food manufacture industry.We sell millions of products to hundreds of customers from over 50 countries every year.

Vanuatu Palm Oil Limited

8.1C1-23

Address: 瓦努阿图 Vanuatu Sanma-Luganville-P.O.Box 353
Tel: +678 37795
Email: ljggjl60@yeah.net
Web:

Vanuatu Palm Oil Limited was founded in Republic of Vanuatu 2005. Protecting rainforest, maintaining local biodiversity and guaranteeing locals' rights and interest are the principles insisted since its establishment. VPO has the full palm oil industry production chain. Our main product are virgin extracted edible palm oil and organic oil palm tree under forest crops and livestock products.

ENTEC KAZAKHSTAN CO., LLC

8.1C1-28

Address: 哈萨克斯坦 Kazakhstan South Kazakhstan-Chimkent-16th MICRO-DISTRICT, 7/2,
Tel: +7 (7252) 482233
Email: kamil@entec.asia
Web: www.entec.asia

ENTEC KAZAKHSTAN CO., LLC exports middle asia`s food products.

FLOAREA SOARELUI SA

8.1C1-33

Address: 摩尔多瓦 Moldova Balti-31 August str, 6
Tel: +373 231 80280
Email: dumitru.lupu@transoilcorp.com
Web: fsoil.info,floris.md

Sunflower oil and meal producer. We produce only high quality goods, without any additives - 100% pure sunflower oil. We can load crude or refined sunflower oil in bulk, in flexitanks, as well asa refined sunflower oil bottled in PET - 1,3 and 5 ltrs.

HONEY MORAVA

8.1C1-37

Address: 阿尔巴尼亚 Albania Albania-Korce-Rruga Nacionale Korçë – Kapshticë, km 6, Plase, Albania
Tel: +355 69 20 55 580
Email: mjalte.morava@yahoo.com
Web: mjalte-morava.com

The Honey Morava company dates back to the "1993". We are the largest company in Albania in the field of beekeeping, production, collection and packing of natural honey.

LL NEW GUINEA INVESTMENT LIMITED

8.1C1-25

Address: 巴布亚新几内亚 Papua New Guinea NCD-BOROKO-Section 32, lot 39,Healy Road KOKI
Tel: 00675 78259005
Email: chuchairman@gmail.com
Web:

LL NEW GUINEA INVESTMENT LTD is a large-scale commercial company registered in PNG with import and export rights. It is mainly engaged in the cultivation, breeding, transportation, storage and sales of PNG local agricultural and forestry products and seafood. Its business scope covers the entire industrial chain. The main exporting countries are China and some countries in Southeast Asia.

Chamber of Commerce, Industry, Agriculture, Mines and Handicrafts of Chad

8.1C1-30

Address: 乍得 Chad N'Djaména-N'Djaména-Avenue du Colonel Moll, B.P. 458
Tel: +235 62515279
Email: ahmedngame@gmail.com
Web: www.cciama-tchad.com

The Chamber of Commerce, Industry, Agriculture, Mines and Handicrafts(CCIAMH) is an important institution in an institutional mechanism that supports the diversification of the Chadian economy. It has qualitative data on almost all sectors and can provide useful information for any project.

MILLENIUM AGROFOOD, S.L.

8.1C1-34

Address: 西班牙 Spain BARCELONA-BADALONA-CALLE JULI GALVE BRUSSON 67-69 2o 1a
Tel: 0034 936399793
Email: castillodelsr@gmail.com
Web: www.l.f.castillodelsenyor.com

公司主要经营橄榄油、红酒、火腿以及猪肉。公司有自己的橄榄油庄位于西班牙橄榄盛产地: 莱里达 (LÉRIDA-Bovera)，当地最大的油庄，起源于罗马帝国时代。城堡建于1907年是当地的城市标志由著名工程师Jaume Gustà i Bondia 设计（高迪的师弟）。我们主要生产点的加工厂所在的地理位置位于不同品种的橄榄和具有高生态价值的自然景点当中。这使我们能够根据最终消费者的口味进行调和。

The company specializes in olive oil, wine, ham and pork. We have our own olive oil groves located in the Spanish productive olive region: LÉRIDA-Bovera, they are the largest olive groves in the region, originated from the era of Roman Empire. The castle was built in 1907 as a local city symbol and designed by renowned engineer Jaume Gustà i Bondia.

PT. GREAT GIANT PINEAPPLE

8.1C1-38

Address: 印度尼西亚 雅加达 Indonesia Jakarta, Indonesia
Tel: 15504949336
Email: wang_lin_ggf@dalianggf.com
Web:

From humble beginnings in Lampung,Sumatera, GPP has become the world's single largest integrated green productionfacility with 75,000 acres under cultivation. It continues to implementsustainable farming practices in all aspects of its operations. These attributes have enabled GGP to build a portfolio of customers all over the world, with some relationships going back decades

柏札莱股份公司 / BRAZZALE S.P.A

8.1C1-42

Address: 智利 扎内-蒙特里-维琴擦 Chile ZANE-MONTE DI MALO-Via Giovanni
Tel: 0532-82461668
Email: liang@brazzale.net.cn
Web: www.brazzale.com

柏札莱集团是一个家族性企业，自1784年开始从事乳制品加工行业。目前集团在意大利、捷克、巴西、中国等国家设有生产工厂，业务遍布全球54个国家和地区。在中国青岛设有生产工厂-柏札莱（青岛）食品有限公司，主要从事意大利奶酪生产。

BRAZALE Group is a family enterprise, which has been engaged in dairy processing industry since 1784. At present, BRAZALE Group has set up production factories in Italy, Czech Republic, Brazil, China and other countries, with operations in 54 countries and regions all over the world. In Qingdao, China, BRAZALE (Qingdao) Food Co., Ltd.Production of Italian cheese.

Kyeong Cheon Foods Co., Ltd.

8.1C2-01(04)

Address: 韩国 ROK(Republic of Korea) Chungcheongbuk-do-Jincheon-gun-20, Munhwa 11-gil, Jincheon-eup
Tel: +82-43-537-3236
Email: laverkr@gmail.com
Web: kclaver.co.kr

Organic Seasoned Seaweed, Organic Seaweed, Seasoned seaweed Gimbap laver, Sushi(laver).

FAR EAST IMPORT&EXPORT (SERDANG) SDN BHD

8.1C1-39

Address: 马来西亚 Malaysia Negeri sembilan-71800 Nilai-Lot 9&10, Jalan Tiara Sentral 1, Nilai Utama
Tel: 0592-5815566
Email: atou105@163.com
Web:

Growers, wholesales and exporters all kinds of fresh fruits and frozen durians

Sempio Foods Company

8.1C2-01(01)

Address: 韩国 ROK(Republic of Korea) Seoul-Jung-gu-2, Chungmu-ro
Tel: 02-3393-5331
Email: sjungyub@sempio.com
Web: www.sempio.com

Sempio occupies over 61% market share in Korea, being the standard soy sauce brand for Korean recipes. For strict quality management, we invest around 5% of our annual sales in R&D, with 20% of our employees working as researchers.

THE HI Co.,Ltd.

8.1C2-01(05)

Address: 韩国 ROK(Republic of Korea) Gwangju-Gwangsan-gu-1009 Pyeongdong-ro
Tel: 070-4070-0732 / +82-70-4070-0732
Email: aaron@bebedang.com
Web: www.bebedang.com

The HI Co,. Ltd Bebedang specializes in the manufacturing, distribution and selling of organic food for infants, such as organic rice crackers made of organic rice. Bebedang Organic Rice Cracker uses only 100% organic rice, organic fruits and vegetables, fresh ingredients from nature.

DASHIMACHONBOK FISHERY CORP

8.1C2-01(06)

Address: 韩国 ROK(Republic of Korea) JEOLLANAM-DO-WANDO-GUN-95, NONGGONGDANJI-GIL, WANDO-EUP
Tel: +82-61-552-5022
Email: Ysy5022@naver.com
Web: www.dashimachonbok.com

In 2008, it was established with 100 abalone farms. US FDA, FSSC22000, HACCP certification, etc. Products are sold at TV home shopping, internet shopping malls, and Incheon International Airport Duty Free Shops. The main products are seaweed grown in clean sea Wando and abalone fed with kelp. We sell live abalone, frozen abalone, abalone ginseng love, abalone soy sauce etc.

Rekahoney Co.,Ltd / Rekahoney Co.,Ltd

8.1C1-41

Address: 新西兰 Whakatane-Whakatane-Level1,114 the Strand New Zealand Whakatane-Level1,114 the Strand
Tel: 13482709200 / 006496263195
Email: 83664360@qq.com yang@rekahoney.co.nz
Web: www.orahoney.co.nz

2004年开始生产与灌装蜂蜜，纯正毛利血统，第一批新西兰UMF协会会员，UMF 证书号：1042 。获新西兰初级产业部签发的动物制品销售证书、出口企业认证证书。旗下以 ORA，Whakaari 两个品牌为主，其中ORA销于中国以外的市场，Whakaari 销往中国市场。

Established in 2009 by a local Maori family, based in the picturesque Waihau Bay on the remote East Cape of New Zealand's North Island, Ora Honey are now well established producers, packers and exporters of fine New Zealand honey. From modest beginnings in a truly special part of the country, we have fast established a global presence with distributors in China, Croatia, Serbia, Saudi Arabia, Sing.

Doctor Mother's Tea Corp.

8.1C2-01(02)

Address: 韩国 ROK(Republic of Korea) Jeju-do-Jeju-si-502, Business Incubator Center Annex, 2715, Pyeonghwa-ro, Aewol-eup
Tel: +82-64-742-8628
Email: doctormotherstea@naver.com
Web: www.doctormotherstea.com

Chamiga, a home of tea and arts evolved into the Doctor Mother's Tea, presenting every mother as a family health manager. Our products are made from carefully selected natural ingredients excluding artificial flavors. Besides healthy tea products lines, our services include contents creations, arts & culture businesses, and education projects.

Manna Food Co.,Ltd.

8.1C2-01(07)

Address: 韩国 ROK(Republic of Korea) Jeollanam-do-Hampyeong-gun-97-4 Donghampyeongsandan-gil, Daedong-myeong
Tel: +82-61-894-7990
Email: Msno63@hanmail.net
Web: www.mannafood.net

In 2016, Manna Food Co., Ltd. has established seasoned laver factory equipped with the latest facilities in Doonghampyeong industrial complex , Hampyeong-gun, Jeollanam-do, and has been producing various kinds of laver products such as laver snack, lunchbox laver, Jeonjang laver, Gimbab laver, laver flakes, salted stone laver, etc.

Maeil Foods Co.,Ltd.

8.1C2-01(08)

Address: 韩国 ROK(Republic of Korea) Jeonnam-Suncheon-16 Sanda1gil, Seomyeon
Tel: +82-61-804-3325
Email: kyj@maeilfoods.com
Web: www.maeilfoods.com

Established in 1945, Maeil Foods Co.,ltd. Has become a leading manufacturer of soy sauce, Korean Jang and Savory ingredients in Korea. Our company has provided high quality products under the strictest of safety QC control to customers around the world. Our customers range from food manufacturing industry to retail and restaurant users.

JANGSOOFOOD CO., LTD.

8.1C2-01(09)

Address: 韩国 ROK(Republic of Korea) Jeollanam-do-Naju-si-9, Jukhwang-ro, Bonghwang-myeon
Tel: +82 61-332-9616
Email: Js0105577@naver.com
Web: www.jangsoofood.com

We make 100% natural healthy beverage products with no sugar, no preservatives, no spices, no color, and we put our customer health first priority.

CHUNGDAMEUN

8.1C2-01(10)

Address: 韩国 ROK(Republic of Korea) Jeollanam-do-Naju-si-455-98, Noan-ro, Noan-myeon
Tel: +82 70 4270 2882
Email: 2ssera@naver.com
Web: www.farmtobaby.co.kr

CHUNGDAMEUN was established in March 2013 for the purpose of "Healthy Food, Happy Life". We CHUNGDAMEUN are committed to providing safe and reliable food, especially to babies and toddlers, through the brand "Farm to Baby", "Farm to Family". We CHUNGDAMEUN wishes to be a trustworthy and loved food company for our customers.

Korea Agro-Fisheries &Food Trade Corporation

8.1C2-01(11)

Address: 韩国 ROK(Republic of Korea) Jeollanam-do-Naju-si-227, Munhwa-ro
Tel: +82-61-931-0983
Email: Kjw16@at.or.kr
Web: www.at.or.kr

aT(Korea Agro-Fisheries & Food Trade Corp.) is wholly government-invested enterprise responsible for agricultural marketing services and international trade since its incorporation in 1967.

DONG-JIN PHARMACEUTICAL CO.,LTD

8.1C2-01(13)

Address: 韩国 ROK(Republic of Korea) Chungnam-do-Geumsan-gun-23, Amjilgol-gil, Jewon-myeon
Tel: 041-751-9920
Email: sihmbo@naver.com
Web: www.idongjinkorea.com

Jungsamdang, The the food division of Dongjin pharmaceutical Co.,Ltd, has steadily grown since when established in March of 2000, by costomers supports. we,d like to extend our heartfelt gratitude to you for your support.

MATDDEULAN FOOD CO.,LTD

8.1C2-01(14)

Address: 韩国 ROK(Republic of Korea) Busan-Saha-Gu-13, Hasinjungang-Ro 17Beon-Gil
Tel: +82-51-265-8537
Email: Akt98837@naver.com
Web: mdafood.kr

MATDDEULAN FOOD CO., LTD, as a brand of Busan fish cake, is praised for its wonderful taste in comparison with other companies based on long technical manpower in the same business field.

DAESANG CORPORATION.

8.1C2-01(15)

Address: 韩国 ROK(Republic of Korea) SEOUL-26, CHEONHO-DAERO, DONGDAEMUN-GU
Tel: +82-2-2220-9649
Email: Jyp0714@daesang.com
Web: www.daesang.com

Daesang Corporation was established in 1956 with pure domestic capital and technology, and puts efforts to practice the vision of Daesang, a company where creates happy future with healthy food culture, for 60 years as the world's top 3 fermentation exclusive company and the best general food company in Korea.

Agricultural Corperation GAGOPA-HEALINGFOOD Co., Ltd

8.1C2-01(16)

Address: 韩国 ROK(Republic of Korea) Gyeongsangnam-do-Changwon-si-177, Samgye-ro, Naeseo-eup, Masanhoewon-gu
Tel: 055-295-1611
Email: kangwon-han@hanmail.net
Web: www.gagopahealingfood.co.kr

Having succeeded a family business, organic wild grass culturing and processing, for 3 generations, we, Gagopa Healing Food Co.,Ltd. manufacture medicinal food materials and teas using the medicinal herbs representing Korea, thus enhancing its brand value. Until today, our company has developed into an eco-friendly agricultural products distribution company, striving to ensure the best quality.

HNK. Co., Ltd

8.1C2-01(17)

Address: 韩国 ROK(Republic of Korea) Jeju-do-Jeju-si-Room 301, Hyun park vill, 22 Shin seol - ro
Tel: +82-070-8751-8489
Email: Sehan@hnkcorp.com
Web:

HNK Corporation works to introduce safe and reliable Korean food products to various consumers who wish to enjoy Korea via Korean food.

DAEDONG KOREA GINSENG CO., LTD.

8.1C2-01(20)

Address: 韩国 ROK(Republic of Korea) ChungCheong Nam-do-Geumsan-gun-586, Gunbuk-Ro, Gunbuk-myeon
Tel: 041-753-8803
Email: Lishen2016@naver.com
Web: www.ddkorea.co.kr

Daedong Korea Ginseng Co., Ltd. manufactures extract from homegrown six-year-old red ginseng. We apply our 'newly fused concentrate system', the very first in Korea, to manufacture red ginseng concentrate.

PAIKCOOK

8.1C2-01(21)

Address: 韩国 ROK(Republic of Korea) Gyeonggi-do-Suwon-si-205, 17, Maesonggosaek-ro 506beon-gil, Gwonseon-gu
Tel: +82-70-4918-9814
Email: bjiseon@theborn.co.kr
Web: www.paikcook.com

PAIKCOOK is a retail brand of THEBORN, a global dining company that operates more than 30 dining brands including BORNGA, SAEMAUL RESTARURANT, and PAIK' S COFFEE.

SEOUL DAIRY CO-OP

8.1C2-01(22)

Address: 韩国 ROK(Republic of Korea) Seoul-71, Jungnangcheon-ro, Jungnang-gu
Tel: +82-2-2094-8371
Email: S7430@seoulmilk.co.kr
Web: www.seoulmilk.co.kr

SEOUL MILK was founded in 1973 in Korea. Acquisition of HACCP Certificate; Introduction of cold-chain system to all processes, in order to maintain the freshness below 5°C; Management of 2,000 farms operated via dairy cattle doctor system.

JSM

8.1C2-01(23)

Address: 韩国 ROK(Republic of Korea) Gyeonggi-do-Seongnam-si-#701, Biz-dong, SKnTechnopark, 124, Sagimakgol-ro, Jungwon-gu
Tel: +82-31-776-2770
Email: estrella@jsmfood.com
Web: www.jsmfood.com

JSM Food is providing various new products to our customers through the development of health - function foods and bio-material products. Our main products are instant soup powder, cordial tea and diet health functional jelly. R&D focuses on developing and researching new products. JSM promises to grow into a company that puts food safety and healthy living first.

SONGHWA FOOD

8.1C2-01(24)

Address: 韩国 ROK(Republic of Korea) Incheon-Incheon-103,Yeomjeon-ro, Michuhol-gu
Tel: +82-32-814-0631
Email: Jbkim0418@hanmail.net
Web: www.gcgim.com

Our company specializes in the production, distribution, and sale of laver products under the brand name of Geum Medal Gim (meaning Gold Medal Laver) home and abroad. It aims to achieve its final goal of providing satisfaction to customers with products; that is why it does its best in carefully selecting top quality raw materials and producing good products.

WELLBIOTECH

8.1C2-01(25)

Address: 韩国 ROK(Republic of Korea) Chungcheongbuk-do -Chungju-si,-152, Allim-ro
Tel: 82-43-847-9430
Email: taekey22@hanmail.net
Web: www.wellbiotech.co.kr

Since establishment in 1999, Wellbiotech has produced healthy drink and sold the products in Korea and exported healthy drinks to Japan, China and the United States.

ACE FARM HOLDINGS

8.1C2-01(26)

Address: 韩国 ROK(Republic of Korea) Jeollabuk-do-Jeonju-si-561-851 4F Songjeong Bldg., 538 Girin-daero, Deokjin-gu
Tel: 8263-254-6888
Email: ace3@acefarm.co.kr
Web: www.acefarm.co.kr

"Global Company" Considering the good of humankind before the company' s profits, Ace Farm Holdings is securing a position as a global business that leads the export of foods especially Aloe Vera Drinks and Coconut Drinks most carefully selected and made with clean and neat Koreans love.

KOREA NATURAL FOOD., LTD

8.1C2-01(27)

Address: 韩国 ROK(Republic of Korea) Jeollabuk-do-Jeonju-si-34 Yeosil-gil, Deokjin-gu
Tel: +82-63-211-4021
Email: niqingqing@hanmail.net
Web: www.dooraeone.com

KOREA NATURAL FOOD CO., LTD mainly produces and sells citron tea, lemon teas and other liquid teas, health food supplements and blanchedvegetables for the Korean dish called Bibimbap. These food products aremanufactured to fit modern people's taste preference based on cutting-edge manufacturing facilities and a bee farming business boasting of 30 years of tradition.

SOROBIO, Co., Ltd

8.1C2-01(28)

Address: 韩国 ROK(Republic of Korea) Jeollabukdo-Jeonju-si-311, Venture Ass' BLDG, JBTP, 109, Ballyong-ro, Deokjin-gu
Tel: +82-70-8866-1196
Email: sorobio@naver.com
Web: www.sorobio.com

Airflow grinding technology that enables fine grinding of raw materials without nutrient destruction by thermal denaturation - Soymilk and tofu production technology using soybean powder finely ground by air-flow grinding machine -Technology for manufacturing powdered foods (powdered tea, etc.) using finely ground raw materials.

Young Poong Co.,Ltd.

8.1C2-01(29)

Address: 韩国 ROK(Republic of Korea) Daegu-Daegu-64,Seongseogongdanbuk-ro, Dalseo-gu
Tel: +82-53-593-4787
Email: trade@ypfoods.co.kr
Web: www.ypfoods.co.kr

Young Poong Co.,Ltd is the company which mostly makes the most Korean food like Topokki (Korean Rice pasta), Pancake (Korean Pizza), Rice cake soup. We have our own factory and exports to more than 50 countries around world. Our Main market is Japan, Vietnam, Singapore etc. We are planning to expand the market.

WellturalBIO CO.,LTD

8.1C2-01(30)

Address: 韩国 ROK(Republic of Korea) Daegu-410, Wolbae-ro, Dalseo-gu
Tel: +82 54 975 0064
Email: Zhenghe75@naver.com
Web: www.welltural.co.kr

'Founded in April, 1992 under the corporate goal of customer satisfaction, trust and market leading, Welltural Co., Ltd celebrated the 25th anniversary this year.

KYUNGWON LIQUOR Co.

8.1C2-01(31)

Address: 韩国 ROK(Republic of Korea) Gyeonggi-do-Gimpo-si-222-36, Daemyeonghang-ro, Daegot-myeon
Tel: (+82) 31-987-9562
Email: hongsamwine@naver.com
Web: www.hongsamju.co.kr

Korean Red-Ginseng Liquor manufacturer, Since 2001. Several times got awards from Korean government in liquor contest. We use registered method at Korean Intellectual Property Office.

K-mush

8.1C2-01(32)

Address: 韩国 ROK(Republic of Korea) Seoul-Seocho-gu-#904, aTcenter 27, Gangnam-daero
Tel: +82-10-5771-3231
Email: kmush2019@kmush.kr
Web: www.kmush.kr

The exporting integrated organization of Korean mushroom that is K-mush. K-mush is leading organization for more than 90% of mushroom exports from korea, exporting high quality mushrooms produced with excellent technologies across the world and enhancing the value of Korean mushroom in the world by undertaking strict quality control.

anywaykorea

8.1C2-01(33)

Address: 韩国 ROK(Republic of Korea) jeoliabuk-do-Iksan-si-110. dongchenje-gil waggung-myeon
Tel: +82-10-5254-9208
Email: anywaykorea@naver.com
Web: wwwanywayvip.com

safe eating Korea's leading agricultural and processed foods for consumers such as white collar and foreigners Specialized CSO (Contract Sales Organization) organization.

LHK Fermentation Lab.

8.1C2-01(34)

Address: 韩国 ROK(Republic of Korea) Gyeonggi-do-Seongnam-si-B-616, 14, Sagimakgol-ro 45beon-gil, Jungwon-gu
Tel: +82 31 731 9366
Email: hgnine@naver.com
Web: www.bal-hyo.co.kr

LHK Fermentation Lab. is a fermentation company in Korea. We have studied fermentation for a long time and all products are made using fermentation technology. Our company has many patents and trademarks and has won many awards and is recognized for its technical skills.

GAWON SALT INC.

8.1C2-01(35)

Address: 韩国 ROK(Republic of Korea) Gyeonggi-do-Gimposhi-462 Daemyeonghang-ro Daegotmyeon
Tel: +82-10-2017-3431
Email: shu7426@naver.com
Web: www.gawonsalt.co.kr

Gawon's is reaching out to its customers and meeting their various needs with products that have been perfected through continuous research, technological development, and in coordination with numerous domestic and overseas industries. Our stringent on-site quality control process, aided by automated equipment and facilities, ensures that our products are safe, clean, and healthy.

Ruiguan Korea Co., Ltd.

8.1C2-01(36)

Address: 韩国 ROK(Republic of Korea) Gyeonggi-do-Paju-si-11, Songhwa-ro
Tel: +82-2-6338-4005
Email: ruiguan@ruiguankorea.com
Web:

Ruiguan Korea Co., Ltd. was established in 2015 as a trading company specialized in Korean Alcohol Beverage and Liquid Tea. We have been exporting Korean No.1 beer, Cass, MangoLingo, Newly launched Oppa soju in 2017 to China.

World Food Co.,Ltd.

8.1C2-01(37)

Address: 韩国 ROK(Republic of Korea) Busan-10,195 Beon-gil, Hea Yang-ro, Yeongdo-gu
Tel: 82-31-331-3352
Email: Jh_kim1@murgerbon.com
Web: www.murgerbon.com

The world Food Company established on 7th Sep 2000 manufactures and distributes the serveral type of nuts with the best quality for the health and flavor in Korea. The brand named "Murgerbon" consists of almonds, walnuts, cashew, peanuts and etc.

GEONWON TRADE Co.

8.1C2-01(38)

Address: 韩国 ROK(Republic of Korea) Seoul-No 101-38, Bi 1st Floor, 10, Gangnam-daero 51-gil,Seocho-gu
Tel: 82-70-8668 2711
Email: akim@jholly.cn
Web:

GEONWON TRADE Co. is mainly engaged in snack food and infant food. Adhering to the business philosophy of "safety, health and quality", the company continuously researches, develops and provides consumers with healthy, delicious and nutritious food. Since its establishment, the company has been developing rapidly and expanding its import and export business scale.

MONGGO FOODS INC.

8.1C2-01(39)

Address: 韩国 ROK(Republic of Korea) GYEONGSANGNAMDO-CHANGWONSI-18, PARYONG-RO 371 BEON-GIL, UICHANG-GU
Tel: 070-8675-0112
Email: trade@monggofood.co.kr
Web: www.monggofood.co.kr

Established in 1905, Mong-Go Foods INC. continuously has maintained rigid regulation for quality control from selecting raw materials to delivery of products the consumers.

AROMAVILLE COFFEE Co.,Ltd

8.1C2-01(40)

Address: 韩国 ROK(Republic of Korea) Gyeonggi-do-Hwaseong-si-23, Seohae-ro 987beon-gil, Paltan-myeon
Tel: 82-31-8059-8141
Email: Aromaville12@naver.com
Web: www.handrip.co.kr

We produce stick mix coffee, Roasted ground coffee bean, Roasted coffee bean, coffee mxi for vending machine. We have HACCP and ISO 22000.

Teazen Inc.

8.1C2-01(41)

Address: 韩国 ROK(Republic of Korea) Jeollanam-do-80-23 Daeun-gil, Gyegokmyeon, Haenam-gun
Tel: +82 70 7006 8560
Email: rade@teazen.co.kr
Web: www.teazen.co.kr

TEAZEN is a professional tea company that started with the mission of providing "a healthy life and a happy relaxation through tea." "PASSION FOR GOOD TEA" is core value of TEAZEN. From the green tea directly cultivated from organic tea plantation in Haenam, Korea to the tea from famous tea producers around the world. we source diverse tea ingredients all over the world.

J&R CORPORATION

8.1C2-01(42)

Address: 韩国 ROK(Republic of Korea) GYEONGGI-DO-SEONGNAM-#610,A-DONG, 697 PAN GYO-RO, BUNDANG-GU
Tel: 82-7046480008
Email: pearltoss@naver.com
Web: www.jnekorea.com

J&E CORPORATION use the name of Kernel Eng. and launched at domestic market in 1995 for the first time. It's the No.1 popcorn brand in Korea which sell in retail warehouses, convenience stores, department stores, supermarkets, shops and expressway rest areas. 'Darda Popcorn' mainly used as an international brand of high-end products which are exported to Japan, China and Russia.

BJ SINGICHOUNG

8.1C2-01(43)

Address: 韩国 ROK(Republic of Korea) Gangwon-do-Cheorwon-gun-115, Durumi-ro, Galmal-eup
Tel: 033-452-3133
Email: Lim100day@naqver.com
Web: www.day100.net

Eat more vegetable: Improved nutritional imbalance - 10g of Dr. Vegetable are the same as 186g of fresh vegetables. - In the World Health Organization (WHO), the daily recommended amount of vegetables is 400g. (Source: World Health Organization (WHO)) - However, the average intake of about 50%.

Okra International Co., Ltd.

8.1C2-01(44)

Address: 韩国 ROK(Republic of Korea) Seoul-Gangseo-gu-#1308, Private Tower II, 171, Magokjungang-ro
Tel: +82-2-2658-2662
Email: mjkim@korinus.com
Web: www.okraint.com

Item Name: K-BUNSIK TOK-POKI Net Weight: Rice Cake - 100g, Sauce - 40g (For 1 Serving) Cooking Time: ±3 minutes Expiration Date: 1 Year Supplier: Okra International Co., Ltd.

21C BABY WORLD

8.1C2-01(45)

Address: 韩国 ROK(Republic of Korea) Daejeon-Yuseong-gu-402, Munhwawon-ro 55
Tel: +82-42-823-8808
Email: 21cbbworld01@naver.com
Web: www.babyworldck.com

We, 21C BABYWORLD, are committed to form a better trade relation between Korea and China in the manner suiting the given circumstances of both countries by providing high quality products and services improved to meet with the preferences of the Chinese consumers by utilizing the superior production capability and technologies of Korea.

DYSSKOREA CO.,LTD.

8.1C2-01(46)

Address: 韩国 ROK(Republic of Korea) Chungcheongnam-do-Boryeong-si-120, Changdong3-gil, Nampo-myeon
Tel: +82 41 931 0891
Email: actonis@daum.net
Web: www.dysskorea.com

"DYSSKOREA CO.,LTD" is 'Seaweed snack' manufacturing Korea-company founded in 1989. 'HACCP' and 'FSSC22000' certified. We offer varieties of 'seaweed snack' such as 'Children seaweed snack', 'Cumin seaweed snack', 'Original seaweed snack' and other kinds of beverage powder for children, such as 'banana latte powder' and 'strawberry latte powder'.

MAHANIAM CO.,LTD.

8.1C2-01(47)

Address: 韩国 ROK(Republic of Korea) Seoul-, jung-gu-Rroom 1205 youwon bldg. 116 seosomoon-ro
Tel: 070-4184-7648
Email: Mhnchina@naver.com
Web: www.mhnkorea.com

MAHANAIM CO., LTD is a professional marketing company specializing in health care to deliver health and happiness to the Chinese. MAHANAIM CO., LTD has been providing the best health care solution for Chinese by studying the health food market in China for years and developing healthy food products.

WELLNESS KOREA Co.,Ltd

8.1C2-01(48)

Address: 韩国 ROK(Republic of Korea) SEOUL-6TH FLOOR, DEOK YUN BLDG., 45 NONHYEON-RO 28-GIL, GANGNAM-GU
Tel: 82-10-2942-2336
Email: yoonpg1234@naver.com
Web: www.wellnesskor.com

WELLNESS KOREA Co., Ltd. is a bio specialized organization in producing the world's best evolved next generation Korean Ginseng products Based on LTVD (Low Temperature Vacuum Drying) and Biotransformation Technology.

CHEONG A GOOD FOOD CO.,LTD

8.1C2-01(49)

Address: 韩国 ROK(Republic of Korea) Gangwon-do-Hoengseong-gun-38, IT valley-gil, Gonggeun-myeon
Tel: +82-33-344-0645
Email: cagfood@cagoodfood.com
Web: www.cagoodfood.com

'Cheong A Good Food Co.' was established with honesty and trust held as the top value of the company.

DANURIM Co., Ltd.

8.1C2-01(50)

Address: 韩国 ROK(Republic of Korea) Daejeon-Daedeok-gu-28-2, Ojeong-ro , 9beon-gil
Tel: 042-487-3287
Email: danurim01@daum.net
Web: www.danurim.com

We are Danurim Co., Ltd a korea manufacturer of Black Ginseng since 2007. We try to our best to go right way and provide right food rather than only chasing success. We consider our customers as our family member and produce products just like mother make food to her family. We do not include any other things than natural materials.

BAEK GYN FS CO., LTD

8.1C2-01(51)

Address: 韩国 ROK(Republic of Korea) Seoul-DO BONG G-136,BANG HAK RO
Tel: 02-3493-4700
Email: baekgyunfs@naver.com
Web: baekgyunfs.trustpass.alibaba.com

DAE WANG BAEK GYUN's King shrimp flavored chip is crunchy and the shrimp flavor is not overpowering. This snack can be enjoyed anywhere at any time. You can have it with ketchup or mayonnaise to enhance the flavor. Enjoy it with Coffee, tea, or milk to have a great snacking experience.

Royal Greens co., ltd.

8.1C2-01(52)

Address: 韩国 ROK(Republic of Korea) Gyeonggido-Seongnamsi-#501 288-24 Galmachiro
Tel: +82-70-4224-5225
Email: royalgreens@naver.com
Web: www.royalgreens.co.kr

Royal Greens shares health and co-prosperity in nature. Our slogan is "Let the body clean and refresh every day with K-doraji". The products cover liquid concentrates, RTD tea and cold brew tea. Also introduce with pride a innovative portable coldbrew tea infuser called RG Cap. We are a start up company, hoping to serve global consumers with herbal health and innovation.

JS KOREA Co., LTD.

8.1C2-01(53)

Address: 韩国 ROK(Republic of Korea) Jeollanam-Do-Wando-Gun-21-13, Nongongdanji6-Gil, Wando-Eup
Tel: +82-61-555-1836
Email: jenny.jskorea@gmail.com
Web: www.jskoreagroup.com

JS Korea Co., Ltd. is professional company, specializing in processing and exporting marine products, and it's headquarter and food processing factory are located in Wando, Korea's largest abalone producer.

Daeheung Co.,Ltd

8.1C2-01(54)

Address: 韩国 ROK(Republic of Korea) Gyeongsang-buk-do-Gyeongsan-si-180 Daebu-gil, Jillyang-eup
Tel: 82 53 811 5158
Email: coalalri@hanmail.net
Web: www.alalri.co.kr

We export jujube concentrate, fruit chips, etc., including dried jujube chips after slice with Gyeongsan jujube as raw material. We have various international certifications, including ISO 22000.

JFOODSERVICE Co.,Ltd.

8.1C2-01(55)

Address: 韩国 ROK(Republic of Korea) Gyeonggi-do-Anseong-si-173 Samjuk-ro, Samjuk-myeon
Tel: +82-31-337-4242
Email: hecho@jfoodservice.com
Web: www.jfoodservice.com

JFoodservice is dedicated to incessant R&D of new products as well as investing in advanced and safe food processing facilities. In addition, our Tempura powder are exported to more than 10 countries to worldwide including Asia, Europe, North and South America.

Pungggi Premium Goods Agricultural cooperative

8.1C2-01(56)

Address: 韩国 ROK(Republic of Korea) Gyeongsangbuk-do-Yeongju-si-1118, Jungnyeong-ro, Punggi-eup
Tel: +82-54-630-8513
Email: Kpch4114@gmail.com
Web: www.kpch.co.kr

Since its foundation in 1995, the Punggi Premium Goods Agricultural Cooperative has cultivated and processed Korean Ginseng in Punggi located at the foot of Sobaek Mountain which is famous for clean water and fresh air. We distribute high-quality products researched and developed by itself with a firm conviction of producing health foods only.

NXS, Inc.

8.1C2-01(57)

Address: 韩国 ROK(Republic of Korea) Gyeonggi-do-Seongnam-si-#204, 2, Seongnam-daero 1179beon-gil, Sujeong-gu
Tel: +82-31-753-8142
Email: hskim@inxs.co.kr
Web: www.milssacn.com

NXS Inc. was founded in May, 2015 as bio-venture. NXS is acronym of natural X science and means "Scientification of Natural Products". NXS analyzes the natural products scientifically and intends to develop, produce and distribute dietary supplements good for wellness, functional cosmetics, healthy living items, etc.

Haneul damda

8.1C2-01(58)

Address: 韩国 ROK(Republic of Korea) Incheon-45-18, Bupyeongbuk-ro, Bupyeong-gu
Tel: +82 10 8821 1709
Email: Haneul1709@naver.com
Web: www.mydalcookie.co.kr

1. Greeting "Sweetness is never special taste but it always brings you a little happiness". 2. Company introduction We established company in 2017. We started food manufacturer in 2018. We have supplied our products to cafes and stores in Korea and sold our products on our website. Main products are dessert and coffee. We also produce candles.

Golden Citron Co., Ltd.

8.1C2-01(59)

Address: 韩国 ROK(Republic of Korea) Gyeonggi-do-Paju-si-45-5, Unjeong 2-gil
Tel: +82-31-948-9961
Email: goldencitron1@naver.com
Web: www.goldencitron.com

<Company> Since established in 1996, Golden Yuzu has exported various juice and drinks to USA, Japan, China and Southeast Asia etc. As a well-being beverage manufacturer, Golden Citron is providing trendy & healthy inner beauty drinks to the market. <Products Line-up> Konjac Jelly (Pororo Jelly, Chia Seed Jelly, 5Kcal! Beauty Jelly), Stick Type Liquid Tea (Yuzu Tea, Flower Blossom Tea).

기업/기관명Orange People Co., Ltd.

8.1C2-01(60)

Address: 韩国 ROK(Republic of Korea) Gyeonggi-do-Hanam-si-Blue Zone 312, 150, ITECO, Jojeong-daero
Tel: 82)70-7711-0844
Email: ayounginthecup@gmail.com
Web: cupful.co.kr/?lang=eng

CUPFUL is a brand that Orange People launched in 2017. Based on abundant raw materials, we produced CUPFUL Stick Latte, Larva Kids Latte and diet concept of CUPFUL Shake Powder. We have been trying to satisfy our customers by giving them both excellent taste and healthy nutrition at the same time by using organic raw materials.

HANEUL NONGSAN AGRICULTURAL ASSOCIATION CORP.

8.1C2-01(61)

Address: 韩国 ROK(Republic of Korea) Gangwon-do-Inje-gun-41, Wontong-ro 74beon-gil, Buk-myeon
Tel: 010-4621-3728
Email: hnfarm@hanmail.net
Web: www.hnfarm.kr

Supply agricultural products includingnapacabbage, white radish, cabbage etc. to the major companies such as CJ, E-Mart and other over 20 years, and the mass production system for kimchi is equipped with. Haneulnaerin Kimchi is particularlyreliable since it is made with 100% Korean origin agriculturalproducts(Korean napacabbage, red pepper powder, sea salt).

N-Choice co., ltd.

8.1C2-01(62)

Address: 韩国 ROK(Republic of Korea) gangwondo-492-8, taegiro,hoengseongeup,hoengseonggun
Tel: 82-33-343-1002
Email: nchoice.korea@gmail.com
Web: www.n-choice.net

N-Choice is a food company specializing in the development and production of foods under the corporate philosophy that it will supply new-concept foods using materials harvested from nature that will be beneficial to our body.

Well-being LS Co., Ltd.

8.1C2-01(63)

Address: 韩国 ROK(Republic of Korea) Gangwon-do-Gangneung-si-24-19, Gwahakdanji-ro
Tel: +82-10-7610-8577
Email: tjqalsdl@naver.com
Web: www.wellbeingls.com

The Biotechnology field is a new growth factor in the future generation. Our company's technology has the bases on vegetable -origin probiotics which originates from soy fermentation foods. This technology is applied to many probiotics research area, production, and sales.

AGRICULTURAL CORP - HYOGA

8.1C2-01(64)

Address: 韩国 ROK(Republic of Korea) gangwon-do-nje-gun-76, milgiul-gil, sangnam-myeon
Tel: 033 461 1563
Email: jinbojc@naver.com
Web: www,hyogafood.com

Majoring fermented healthy baverage for helping detoxing alcohol hangover, digesting from over eating, fatigue from stress. 100% natural ingredients from the mountain in Gangwon-do, Korea. All products are pure extraction beverage without putting chemicals.

SANYA

8.1C2-01(65)

Address: 韩国 ROK(Republic of Korea) Busan-Youngdo-ku-35-12, dongsamnam-ro
Tel: 051-405-8887
Email: Chwa5@naver.com
Web: www.sanyafood.co.kr

SanYa has a very nice drying technology, "15°C low temperature vacuum dry" developed by the research funds of Korea government during 30 years. During this 15 year. We apply this drying technology to product the salt-free sea-cucumber. It needs only 3~5 days for perfect dry of 4%W.

ARIUL FISG LLC

8.1C2-01(66)

Address: 韩国 ROK(Republic of Korea) Jeollabuk-do-Gunsan-si-103-15, Sipjadeul-ro, Seongsan-myeon
Tel: 063-443-3312~3
Email: pko3313@naver.com
Web: gold-fish.kr

ARIUL FISH LLC produces carefully-processed taste-rich products through thorough hygiene management through cutting-edge HACCP system by carefully selecting domestic stalks and various marine products.

OCEAN STAR CO.LTD

8.1C2-01(67)

Address: 韩国 ROK(Republic of Korea) JEJU CITY -30, BAEKPO BUK-GIL
Tel: 010-5737-1052
Email: energico77@naver.com
Web: oceanstarco.com

WINWINFISH CORP.

8.1C2-01(68)

Address: 韩国 ROK(Republic of Korea) Gyeonggi-do-Yangpyeong-gun-20 Jungangro378, Yangpyeong-eup
Tel: +82-70-4640-0128
Email: gairytao@naver.com
Web: www.winwinfood.kr

WINWINFISH CORP. was established in 2001 as a Korean company specialized in processing and circulation of aquatic products. In 2013, the company launched a series of products for baby meals in Korea, which gained lots of popularity and thereby the brand name "WINWINFOOD" was made.

JAEWON GLOBAL NET

8.1C2-01(69)

Address: 韩国 ROK(Republic of Korea) GYEONGGI-DO-ICHEON-SI-87, CHEONGBAENGNI-RO 697, BAEKSA-MYEON
Tel: +82-31-631-7223
Email: nis35@korea.com
Web: www.goodandwell.co.kr

JAEWON GLOBAL NET's "GOOD &WELL" brand means our company makes good products with best know-how and good raw materials by using good facilities. The main products are Korean Seasoned Seaweed (Ajitsuke-nori), Roasted Seaweed (Yaki-nori), Dried Seaweed (Hosi-nori), Dried Kelp (Konbu), Brown Seaweed (Cut-wakame), Hijiki, Sushi-material and etc.

HANHAEBO CO., LTD.

8.1C2-01(70)

Address: 韩国 ROK(Republic of Korea) Jeollanam-do-Hampyeong-gun-57162, 3513, Yeongsan-ro Hakgyo-myeon
Tel: +82 61-323-8789
Email: hanhaebo@naver.com
Web: www.agrotrade.net/mini/hanhaebo87

Han Hae Bo ONLY uses high quality seaweed collected from the clean sea area of South-Western Sea of Korea, which is one of the three largest tidal flats in the world, rich in minerals. 100% Korean high quality seaweed of harvest, no need to freeze, fresh with best taste High quality No GMO oil, roasted under low temperature so that lock the nutrients.

partner companies / HYEONGJE FISHERIES

8.1C2-01(71)

Address: 韩国 ROK(Republic of Korea) Jeollanam-do-Shinan-gun-1115 Bongri-gil, Jido-eup
Tel: 8210-5329-7627
Email: thehangim@naver.com
Web:

laver has deeper texture and flavor than our competitors' laver. Also, we got the organic certification from the United States Department of Agriculture (USDA) in 2012 and it ensures that our products are safe to eat. We focus on our food's safety and taste, as we dry our laver in the sun twice longer on average than our rivals' laver.

Prestige Laver Co., Ltd.

8.1C2-01(72)

Address: 韩国 ROK(Republic of Korea) Chungcheongnam-do-Seocheon-gun, -139, Huirisan-gil, Jongcheon-myeon
Tel: 82-41-953-5555
Email: Maros43@daum.net
Web: www.marochip.com

We are a professional producer of Seaweed (laver) snack. Also our major business is production of laver products exclusiverly for export.

CHL OCEAN CO.,LTD

8.1C2-01(73)

Address: 韩国 ROK(Republic of Korea) Gyengsangnam-do-Tongyeong-si-303, 75, Jungnim 1-ro, Gwangdo-myeon
Tel: 055-643-9834
Email: Chlocean@chlocean.com
Web: www.chlocean.co.kr

CHL OCEAN CO.,LTD. is a fish trading company, which of head office is located in Tong-yeong city, the central of Korean fishery, and has branch office in Xiamen in China.

Wan-Do kumil National Federation of Fisheries Cooperatives

8.1C2-01(74)

Address: 韩国 ROK(Republic of Korea) Jeollanam-do-Wando-gun-14. Hahwajeon-gil, Gumil-eup
Tel: 821086653053
Email: Etax5447@suhyup.co.kr
Web: www.wandokumil-suhyup.co.kr

AS a cooperative with marine workers, the main business is finance And fisheries.

KITA / Ministry of Oceans and Fisheries

8.1C2-01(75)

Address: 韩国 ROK(Republic of Korea) Seoul-5F, Trade Tower, 511, Yeongdong-daero, Gangnam-gu
Tel: +82-2-6000-2306
Email: Minyong99@kita.net
Web: www.kita.net

The Korea Fisheries Association is a non-profit corporation that was established in 1965 for two specific reasons: to promote the development of Korea's fisheries industry, and to protect the rights and interests of those who work in the fisheries industry.

Ron Durán

8.1C2-02(04)

Address: 巴拿马 Panama Panama-Panama-calle 50, edificio senorial 50 local 12, planta baja
Tel:
Email: lorenzo@ronduran.com
Web:

Ron Duran is handcrafted rum created by our recognized master blender Francisco "Don Pancho" Fernandez as a tribute to Panama's most famous boxing champion of all time. Aged for 7 years in white oak barrels. Complex profile with caramelized notes of brown sugar, bourbon, and vanilla.

Tasty Fruit

8.1C2-02(05)

Address: 巴拿马 Panama Panama-Panama-Plaza Edison, Sector el Paical, Pisos 2 y 3
Tel: 507 560 0600
Email: luisd3188@gmail.com
Web:

Tasty Fruit S.A., is a Panamanian company dedicated to exporting a wide variety of tropical fruits.

ESTRADA COMPANY, S.A.

8.1C2-02(08)

Address: 巴拿马 Panama Panama Oeste-Chame-La Faustina Principal Numero 1, Nueva Gorgona
Tel: +507 838 9641
Email: jose.estrada@estco.com.pa
Web:

"The quality of our products, the packing plant and farm are certified by GLOBAL GAP to European market and it also has the national certification issued by MIDA (Ministry of Agriculture) The presence, year after year, of our qualified products has prevailed for decades and has granted us a preference by customers and sales companies because of image, quality and quantity of our watermelon.

PRIMERO CUARENTA GROUP, INC.

8.1C2-02(09)

Address: 巴拿马 Panama Chiriqui-David-Edificio Quin Wood, Oficina #6
Tel: +507 6405 1851
Email: gchatmon@primero-cuarenta.com
Web: www.pcgfruit.com

Primero Cuarenta Group, Inc. S.A. (PCG) is a sustainable pineapple producer based in Panama's Chiriquí Province. PCG produces the golden (MD-2) pineapple varietal, which is the current global standard for whole fresh pineapple consumption. PCG's business model is oriented towards export markets throughout the world.

FARALLON AQUACULTURE, S.A.

8.1C2-02(10)

Address: 巴拿马 Panama Panama -Panama-Centro Comercial Los Pueblos 2000, Local 12D
Tel: +507 3801500
Email: jobediente@gfarallon.com
Web: www.gfarallon.com

The group has over 2,500 hectares (6,000 acres) of shrimp farming area in operation distributed in 3 countries, 2 packing plants, producing around 6,000 tons of shrimp all year round. selling through our active marketing partners in the United States, Europe and Asia with the most strict Quality Control through all the stages of the process.

Radical Destilling

8.1C2-02(12)

Address: 巴拿马 Panama Chiriqui-Santa Rita de Boquerón-Guayabal
Tel:
Email: jean.digeon@mici.gob.pa
Web:

Handmade distillates made 100% in Panama We do not intend to invent the wheel, but we give our distillates an innovative touch. Join us and let's write this story together.

Frutiks

8.1C2-02(14)

Address: 巴拿马 Panama Panama -Panama-Betania
Tel: +507 6983-1343
Email: gerencia@frutikspanama.com
Web: www.frutikspanama.com/es

Frutik's is a young company, started in 2017 by Jenys Santos and Alejandro Samaniego as direct owners. Its main north is based on offering natural products, without chemicals, dyes, flavorings, sugar or water. Our level of commitment to customers and quality have led to our exponential growth that today translates into a word, QUALITY.

EUROFUSIÓN, S.A. (AQUAÇAI)

8.1C2-02(15)

Address: 巴拿马 Panama Panama-Panama-Area Bancaria Torre Banesco piso 13 ofic 11, diagonal a Banco General
Tel: +507 340.6289
Email: agow@aquacai.com
Web: www.aquacai.com/index.php

"Natural artesian water from the rainforest of Panama. When our founders set out to find an artesian water, they looked all over the world. Their goal was to bring a premium artesian water to discriminating consumers—one that had a unique sense of terroir, naturally-occurring minerals, and unparalleled softness. After an exhaustive search, they discovered the ultimate source in Panama.

HIU COFFEE /LOS LLAJOBES STATE S.A.

8.1C2-02(16)

Address: 巴拿马 Panama Chiriqui-Boquete-Los Lajones Estate Volcancito Arriba
Tel: +507 720 1311
Email: graciano.cruz@gmail.com
Web: www.loslajonesestate.com/eng

Los Lajones Organic Estate is located on the slopes of Volcan Baru in the elevation of 1750 - 2400 masl. The total size of the farm is 160 ha, with about 40 ha dedicated to farming. Currently, 35 ha are cultivated with coffee trees, 21 ha are used for production and 14 ha is devoted to young trees between 2~3 years old (mainly Geisha and Pacamara variety); other varieties are Caturra and Catuai.

Sinopan Investment

8.1C2-02(17)

Address: 巴拿马 Panama Panama-Panama-Torre Banesco Piso 18
Tel:
Email: sinopaninvestment@gmail.com
Web:

SINOPAN is a multicultural professional group of Consultants that provide professionals services to your business providing financial advisory, consulting, and business development services to assist small, mid-sized and large companies in capturing opportunities in China and Latin America. SINOPAN has been advising Chinese companies on how to successfully navigate, establish and conduct business.

PRODUCTOS LUX, S.A. (PROLUXSA)

8.1C2-02(18)

Address: 巴拿马 Panama Panama-Panama -Calle 97 este, Parque Lefebre
Tel: 507 224-9095
Email: presidente@apexpanama.com
Web: www.proluxsa.com

"PROLUXSA manufactures vinegars, fruit juices, seasoning sauces, hot sauces, vanilla fla-voring, canned soups, beans and vegetable products. The company operates two food processing plants and three distribution centers in Panama. Proluxsa also has direct distri-bution in Costa Rica through wholly owned subsidiary.

H. TZANETATOS, INC.

8.1C2-02(19)

Address: 巴拿马 Panama Panama-Panama -Vía Tocumen, frente a la entrada de Bello Horizonte,
Tel: (507) 305-8100
Email: emusic@tzanetatos.com
Web:

"For over 50 years, H. Tzanetatos, Inc. has been dedicated to obtaining brands in different segments such as: Food, Beverages, Personal Care, Cosmetics,Home and Auto, with products oriented to provide the best quality at the best price to our consumers. H.Tzanetatos, Inc. is considered a leader in this field in the Republic of Panama and in 2010 has exported to different countries.

Don Pachi Estate / FRANCISCO SERRACIN / CAFETALEROS S.A.

8.1C2-02(20)

Address: 巴拿马 Panama Chiriqui-Boquete-Bajo Boquete, Avenida Fundadores.
Tel: +507 720-2545
Email: donpachiestate@gmail.com
Web:

The coffee plants that we cultivate are assisted solicitously with a great population of mix varieties of tall type, (Typicas, Bourbon and Geishas), make a mixture with Catuai wich blended appropriately they guarantee the exquisite flavor of our coffee, A great Coffee. "We produce the best coffee, because nature is our ally".

VARELA HERMANOS S.A

8.1C2-02(21)

Address: 巴拿马 Panama Panama-Panama-Avenida Domingo Díaz 2
Tel: 507 377-4000
Email: ddavis@varelahermanos.com
Web:

Varela Hermanos S.A. is one of the largest distributors of liquors and wines in Panama, maintains branches nationwide in the provinces of Panama, Colon, Herrera and Chiriqui. The production processes of Varela Hermanos S. A. start with the distillation of alcohol from cane juice and rum from molasses. Every year during the summer months (January to May), the company's workforce in Pesé.

tropical frUlt company S.A

8.1C2-02(24)

Address: 巴拿马 Panama Chiriqui-David-El Carmen Calle D Sur Ave. 3 Edificio Doña Nereyda Local No. 4
Tel: +507 774 2327
Email: doraespinoza@doger.com
Web:

"Fresh Pineapple, We produce pineapple since 2008, observing good agriculture practices,under Fairtrade Certification. We ensure our employees with infrastructures such as (laundries, security showers, dressing rooms, warehouses); using a minimum of fitosanitary in a ecofriendly production. We maintain harmony and care of the environment up to quality of the fruit to be exported.

Rocmar Seafood, S.A.

8.1C2-02(26)

Address: 巴拿马 Panama Panama Oeste-Arraiján-Puerto Vacamonte, Arraiján Apartado 6-9492
Tel: +507 251 4389
Email: alex@gruporocmar.com
Web: www.rocmarseafood.com/index.html

"Rocmar Seafood, S.A. is a leading frozen fish wholesale Export Company based in the Republic of Panama. Frozen at Sea - Longliner boatsOur main objective is to offer a high quality fish variety caught and frozen at sea. Through our commitment, we have gained the loyalty of satisfied customers all over the world. Our facilities are HACCP certified and approved to export to USA and Europe. Rocmar S.

OPEN BLUE

8.1C2-02(28)

Address: 巴拿马 Panama Panama-Panama - PH Terrazas de Albrook, 4to. Piso, ofic. 334, tomar el 1er ancensor, Autoridad Marítima, antiguo Rey
Tel: 507 317 1540
Email: jvisuetti@openblue.com
Web: www.openblue.com

Cobia Fish, premium product.

Elbros Internacional, S.A.

8.1C2-02(31)

Address: 巴拿马 Panama Colon-Colon-Avenida Roosevelt, Zona Libre de Colón, Calle 16, Colón 0302-00160
Tel: +507 441 3677
Email: ventas@elbros.com
Web: www.elbros.com

Logistic services, food exporter.

Lamastus Family Estate

8.1C2-02(32)

Address: 巴拿马 Panama Chiriqui-Boquete-Lamastus Family Estate
Tel:
Email: wlamastusb@gmail.com
Web:

The Lamastus Family has being producing coffee in Elida Estate for four generations since 1918. Elida Estate coffees are produced under a unique world-ecological condition: it is shade-grown, bird-friendly, the farm is located at a very high elevation, in a microclimate with very low temperatures, the coffee trees are surrounded by the Volcan Baru National Park -a virgin native cloudy rain forest.

COMPAÑÍA LEVAPAN DE PANAMÁ, S.A

8.1C2-02(35)

Address: 巴拿马 Panama Panama -Panama City-Ave 4 La Locería Edificio Levapan Panamá al lado de Max Jimenez a un lado de la Papelera Istmeña
Tel: 5072364805
Email: gabriel@levapan.net
Web:

Bread company.

Agencia Sky, S.A.

8.1C2-02(39)

Address: 巴拿马 Panama Panama Oeste-Capira-Via Interamericana, Capira "Parque Ecologico SKY Capira"
Tel: +507 229668
Email: tecnic@126.com
Web: www.aguasky.com

Natural Artesan Water.

Cerveceria Candestina S.A. / CERVECERIA CLANDESTINA S.A

8.1C2-02(40)

Address: 巴拿马 Panama Panama Oeste-Arraiján-Panamerica Corporate Center, Edificio 9123, local 1 y 2 Panamá Pacífico, Rep. de Panamá.
Tel: 507 308-7570
Email: siemprefrias@cerveceriaclandestina.com
Web:

Panamanian Artesan Beer.

El Guapo De Boquete - Grupo E Inversiones Madesa / EL GUAPO DE BOQUETE - GRUPO E INVERSIONES MA.DE SA

8.1C2-02(42)

Address: 巴拿马 Panama Chiriqui - Boquete - Volcancito - boquete
Tel: +507 730 9559
Email: elguapo.ma.de@gmail.com
Web:

Handmade Fruit liqueurs and marmalade.

Samyang Corporation

8.1C2-03

Address: 韩国 ROK(Republic of Korea) Gyeonggi-do-Seongnam-si-295 Pangyo-ro, Bundang-gu
Tel: +82221579516
Email: sujin.cheon@samyang.com
Web: www.samyangcorp.com

Samyang Corp. chemical, food stuff consumer foodstuff, bottle and ion exchange resin business units and executes global business activies through its overseas branches and offices. Our main product is 'EASY TOMORROW', It is a hangover relief product made in a tablet form by mixing various ingredients good for hangover relief.

CK INTERNATIONAL CORP.

8.1C2-04

Address: 韩国 ROK(Republic of Korea) Seoul-Room407,189, Hancheon-ro 66Gil, Seongbuk-Gu
Tel: +82-9197616
Email: silkroad21cn@naver.com
Web: www.jiurifood.com

CK I'ntl Corp. have brands like JIURI, WEIZU, LAZU, BIGZU, QIUYU and GUOJI, each brand's food is based on health. We have JIURI brand's seasoned laver series, which select and process good ingredients with delicious well-being foods, and there are Korean specialty WEIZU and LAZU brands of snacks, BINGZU brand's Milkysoda series, and other drinks and juices from JIURI and QIUYU brands.

Pulmuone Food Co., Ltd

8.1C3-01

Address: 韩国 ROK(Republic of Korea) Chungcheongbuk-do-Eumseong-gun-730-27, Samyang-ro, Daeso-myeon
Tel: 010-84560016
Email: tjpark@pulm uone.com
Web: www.pulmuone.kr

圃美多 (Pulmuone) —关爱人与自然的乐活企业，以关爱友邻、尊重生命的精神生产供应产品。圃美多 (Pulmuone) 在全球范围内以“为我和地球提供有益健康的食物和健康生活”这一品牌口号运营其健康食品事业和健康生活事业。
Pulmuone, as a LOHAS company that cares for people and nature, provide products made with love for neighbors and respect for life. Pulmuone is operating its wholesome food business [food] and life business [health] on a global scale under the brand slogan, 'Wholesome Foods and Healthy Life for Me and the Earth'.

亿滋国际 / MONDELEZ INTERNATIONAL AMEA PTE.LTD.

8.1C3-02

Address: 新加坡 Singapore 346 JALAN BOOM LAY SINGAPORE
Tel: 60807962
Email: gwu@mdlz.com
Web:

Mondelēz International, Inc. empowers people to snack right in approximately 150 countries around the world. With 2018 net revenues of approximately $26 billion, MDLZ is leading the future of snacking with iconic global and local brands such as Oreo, belVita and LU biscuits; Cadbury Dairy Milk, Milka and Toblerone chocolate; Sour Patch Kids candy and Trident gum.

Oravida NZ Ltd

8.1C3-03

Address: 新西兰 New Zealand Auckland City-L3,139 Quay Street
Tel: +86 21 6238 3377
Email: dorothy.cui@oravida.com
Web: www.oravidadairy.com.cn

兰维乐食品有限公司是一家朝气蓬勃的食品企业，始终致力于将新西兰优质的食材带到中国。也是将新鲜乳制品空运直送中国的开拓者。Oravida是两个词的结合: “Ora”是毛利语中的“健康, 美好”, “Vida”是西班牙语，它的含义是“生命”。将这两个词组合在一起，表达了兰维乐希望通过新鲜乳制品，将健康生活带给广大消费者的美好愿景。
Oravida is a young and innovative food company bringing the best of New Zealand' s premium food products to China. Oravida is a combination of two words - "ora" meaning "be well/healthy" in Māori, and "vida" meaning "life" in Spanish. Oravida owns dairy farms in New Zealand and the cows on our farms enjoy wide open spaces, lush green grass to eat and clear spring water to drink.

AMMU INC

8.1C3-04(02)

Address: 印度 India Tamilnadu-Coimbatore. Pin. 641041. -63, Kurinchi Min Nagar, 9th Street, Thondamuthur Road, Vadavalli.
Tel: 0091 9442625788
Email: ammuinc@gmail.com
Web: www.ammuinc.com

我们公司是AMMU公司，来自印度，出口芒果泥，芒果浓缩液，番木瓜泥，番石榴泥。我们有7个生产工厂通过ISO 22000，HACCP，FSSC认证。我们的主要产品阿方索芒果浓汤，100%天然。
Our company AMMU INC, from India, exporter of Mango puree, Mango concentrate, Papaya puree, Guava fruit puree. We have 7 production factories with ISO 22000, HACCP, FSSC certified. Our main product Alphonso Mango Puree. All our products are 100 % natural.

Lotus Overseas

8.1C3-04(03)

Address: 印度 India Gujarat-Deesa-385535-15, Bansilalji complex, Gandhi chowk
Tel: +912744221559
Email: info@lotusoverseas.net
Web: www.lotusoverseas.net

Lotus Overseas Company have wide range of products which are Agricultural Product, Spices (Whole & Grounded) and Botanicals with our promise of quality products that stay ahead of time. Our products provide you with a bountiful bumper crop of nutrition and flavor! We have good knowledge of market and quality. Our company always give good quality with good price. We never compromise with quality.

Pattabhi Agro Foods Pvt Ltd.

8.1C3-04(04)

Address: 印度 India Andhra Pradesh-Peddapuram-Valutimmapuram Road, ADB Rd,533437
Tel: 08842326606
Email: bvkris@yahoo.com
Web: www.pattabhiagro.com

Pattabhi Agro Foods Private Limited is one of the largest technologically advanced rice mills in India, located in the heart of Andhra Pradesh - India, the company has become one of India's leading rice exporter.
India is a leading rice exporter and Pattabhi Agro holds 10% of the nine million tons of market share.

Agricultural and Processed Food Products Export Development Authority

8.1C3-04(05)

Address: 印度 India Delhi-New Delhi-3rd Floor, NCUI Building 3, Siri Institutional Area, August Kranti Marg, (Opp. Asiad Village), New Delhi 110016
Tel: 011-26861502
Email: sudhanshu@apeda.gov.in
Web: www.apeda.gov.in

The Agricultural and Processed Food Products Export Development Authority (APEDA) was established by the Government of India under the Agricultural and Processed Food Products Export Development Authority Act passed by the Parliament in Dec, 1985. The Act (2 of 1986) came into effect from 13th Feb, 1986 by a notification issued in the Gazette of India: Extraordinary: Part-II [Sec. 3(ii):

SHRI HARI INDUSTRIES

8.1C3-04(08)

Address: 印度 India RAJASTHAN -BIKANER-F-103 BICHWAL INDUSTRIAL AREA
Tel: +91-151-2250587
Email: shriharimtc@yahoo.co.in
Web: www.krishnaindia.in

We are leading manufacturer of sesame seeds particular in hulled sesame of different grade and quality and we are also manufacturer of psyllium husk and powder of different grade we are trading in spices from india to all over world we are star export house.

SUNSHINE TEA

8.1C3-04(09)

Address: 印度 India Delhi-Delhi-#6, 14 School Lane, Barakhamba Avenue, Connaught Place, New Delhi - 110001
Tel: +91 11 2371568
Email: anurag@sunshinetea.in
Web: www.sunshinetea.in

In 2005, We introduced the world to the 'Tea Stick'. It has a unique and authentic design. It is an innovation patented in 2007. Customers in more than 10 countries enjoy Sunshine Tea products. And not just the popular favourites such as fruit and herbal infusions, aromatic tea and ice tea have been delighting the taste buds of tea enthusiasts around the world.

NATIONAL AGRICULTURAL COOPERATIVE MARKETING FEDERATION OF INDIA LTD. (NAFED)

8.1C3-04(11)

Address: 印度 India 110014-DELHI-NAFED HOUSE, SIDHARTHA ENCLAVE, RING ROAD, ASHRAM CHOWK
Tel: +91 11 26343366
Email: ITD@NAFED-INDIA.COM
Web: www.nafed-india.com

National Agricultural Cooperative Marketing Federation of India (NAFED) is an apex organization of marketing cooperatives for Agricultural produce in India. NAFED was established on 2-Oct-1958 with the mission to promote the domestic and International trade of Agricultural and Forest resources. NAFED has an expertise and infrastructure to undertake Import / Export of Agricultural commodities.

CHAIZUP BEVERAGES LLP

8.1C3-04(12)

Address: 印度 India 700017-KOLKATA-6, PICASSO BITHI, 5TH FLOOR, UNIT 4, RGENCY, KOLKATA
Tel: +913322801006
Email: LAXMIKANT@CHAIZUP.COM
Web: www.chaizup.com

Chaizup is a reputed Indian company mainly into Trading (International & Domestic). TEA is the major commodity which we handle. We have Tea blending & packing facilities available in Kolkata as well as in Coimbatore. •We export more than 9 million kgs. •We procure the teas from our internal sources, private sources and all major tea auction centers in India.

ARICHA TRADING CO LTD

8.1C3-04(13)

Address: 印度 India WEST BENGAL-KOLKATA-8 BBD BAG EAST
Tel: +91-33-22137617
Email: TRADE@ARICHAINDIA.COM
Web: www.arichaindia.com

ARICHA is a regular supplier of Organic Spices to food manufacturers in Japan, Europe. We at ARICHA provide pesticide-free spices. ARICHA has selected & focused on mineral rich soil & bio-diversity, thus enabling RICHER SOIL and sustainable environment.
Strong support from ARICHA enabled RICHER FARMERS. Quality products from ARICHA provide RICHER HEALTH This results in A RICHER Taste of India.

SHANGI FOOD PRODUCT

8.1C3-04(14)

Address: 印度 India MAHARASHTRA-MUMBAI-M-3, MEHRA INDUSTRIAL ESTATE, AK ROAD, SAKINAKA,
Tel: 022-28592949
Email: shangi_100@yahoo.co.in
Web: www.tradeindia.com/seller-11826927-satguru-marketing

WE ARE MANUFACTURERS OF HIGH QUALITY GOURMET FOODS SPECIALIZING IN MEXICAN, ITALIAN, THAI, JAPANESE & INDIAN SAUCES AND PASTES - FOR SUPPLY TO TOP END RESTAURANTS, HOTELS, FLIGHT KITCHENS, AND SUPERMARKETS.

JSB PROCESSED FOOD EXPORTS PRIVATE LIMITED

8.1C3-04(16)

Address: 印度 India DALLUPURA EAST DELHI-DURGA PARK-KH NO - 135 PLOT NO-31 H NO-61
Tel: 01204263513
Email: INFO@JSB.IN info@jsbexim.net
Web: www.jsb.in www.jsbexim.net

JSB Processed Food Exports offers a full range of Fresh Pig Meat, Frozen Pig Meat, Edible Offal, Processed & Tinned Pig Meat, Wild Boar, Processed Wild Boar .
Our product list includes: Product Category Belly, Picnic, Butts, Hock, Feet, Lacones, Head Meat, Cheek Meat, Loins Bone In, Loins Boneless, Tender Loin, Back Ribs, Side Ribs, Buckeye (Sirloins), Ham, Variety, Value Added.

STAR FRUIT COMPANY

8.1C3-04(19)

Address: 印度 India Karnataka-Vijayapur-14, Nehru Market, M.G.Road,
Tel: +918352250540
Email: starfruitcmp@gmail.com
Web: www.starfruitcompany.com

Founded in 2006, Star Fruit Co. is specialized in providing the perishable products (Fruits & Vegetables) in the best of their quality available in farms to the variety of consumers across the globe based in Vijayapur (Karnataka). An extensive headquarters for a high, end quality pack & packaging of the product. Excellent Marketing network & having regular orders from reputed clients.

Nagasaki Prefecture

8.1C4-01(02)

Address: 日本 Japan Nagasaki-Nagasaki-3-1 Onoue-machi
Tel: 095-895-2873
Email: okayama@pref.nagasaki.lg.jp
Web: www.pref.nagasaki.jp

This is Nagasaki Prefecture, a local government, Japan.

寿制菓株式会社 / Kotobuki Seika Co., Ltd

8.1C4-01(03)

Address: 日本 鸟取县-米子市-旗崎2028 Japan Tottori-Yonago City-2028 Hatagasaki
Tel: +81-859-22-7450
Email: y-sakamoto@kozuchi-net.jp
Web: www.okashinet.co.jp

本公司是一家以糕点设计、制造、销售为专门的糕点制造商，也是东京证券交易所上市的寿Spirits株式会社的子公司。随着日本国内日渐人口减少，我们正在致力于将中国作为亚洲最主要的市场。近年来我们一直通过日本贸易公司以及中国总代理商促进面向中国的优质糕点礼品的间接出口和销售扩张。
We are a general producer of sweets: a confectionary company, one of subsidiaries of Kotobuki Spirits Co., Ltd. listed with TSE1st. Declining Japan's population, we make entiring the China market an overriding concern, and focus on promoting indirect exporting and expanding the distribution of Premium Gift Sweets in China, in partnership with the Japanese trading company and the Chinese importer.

MARUTOSEIKA CO., LTD

8.1C4-01(04)

Address: 日本 Japan Hiroshima-Fukuyama-1532 Nakatsuhara Miyuki-Cho
Tel: 818097906622
Email: tei@marutoseika.com
Web: www.marutoseika.com

公司创业至今已有70年的历史，出口20多个国家和地区。在日本半生半熟蛋糕类属于尖端企业。常温下180天的保质期是我司的强项。每年出口150个20尺的集装箱。
Marutoseika Co.,Ltd has established in 1946. We have over 70 years to focus on the confectionery. Our strength is can keep the products in room temperature the shelf life is 180 days. We have experience to directly business with overseas customer.

国和产业株式会社 / KUNIWA CO., LTD.

8.1C4-01(05)

Address: 日本 冈山县-仓敷市-玉岛乙岛7132 Japan OKAYAMA-KURASHIKI-7132 TAMASHIMA-OTOSHIMA
Tel: +81-86-526-8373
Email: kuniwa@orange.ocn.ne.jp
Web: www.kuniwa.net

国和产业是1971年创业的一家日本食品公司。我们主要产品是柿饼。由日本传统的做法生产下来用柿饼的和菓子产品。我们从2016年开始出口日本零食事业。我们和我们中国子公司：那台国和食品有限公司已有好多日本产品。请来到我们展台看一看。
KUNIWA CO., LTD. is an innovative confection company in Okayama prefecture, Japan. Since 1971, we have been producing a variety of KAKI (Dried persimmon) products which have been enjoyed by a lot of customers. Since 2016, we started the export business of Japanese confection. We have a lot of attractive products. Please come to see!

SUN DAICO.INC

8.1C4-01(08)

Address: 日本 福冈县-福冈市-福冈市博多区丰1-9-15 Japan JAPAN-FUKUOKA-1-9-15, YUTAKA HAKATA-KU
Tel: 81-92-474-3330
Email: u30a@forestg.jp
Web: www.sundaico.co.jp

全资子公司，池龟酒造（株），位于日本福冈县筑后川河畔，至今已有140余年历史。秉承日本传统制酒工艺，杜氏精神，以及创新的酿造方法，为各界朋友所赞赏。本公司酒类产品除在日本深受厚爱以外，还出口至美国、加拿大、德国、新加坡、以及中国（大陆，香港、台湾地区）等国家。本酒造产品除在日本国内所获各种酒鉴评会金奖以外，还获得法国Kura Master日本酒品鉴金奖。还入选了2019年【G20福冈各国财务大臣・中央银行行长】特供酒。
Founded in 1887. This is a long-established sake storehouse located on the shores of the Chikugo River, Kyushu's largest river.The first Genzo was a master of Kurume Zen, a master of swordsmanship. Genzo is a person who is rich in enterprising spirit, devised a new brewing method, and contributed to sake making in Fukuoka Prefecture.

中道贸易株式会社 / China Road Trading Co., Ltd.

8.1C4-01(06)

Address: 日本 兵库县-神户市-中央区港岛中町3-1-2 Japan Hyogo-Kobe-1-2, 3-Chome, Minatojima-Nakamachi, Chuo-Ku
Tel: 078-304-1150
Email: crt_kobe@hotmail.com
Web:

本公司在日本神户多年，专门从事与中国进出口贸易，主要业务为草席制品，工业用橡胶用品，女士鞋类，食品等多范围商品。近年来，投力于日本制食品（糕点）的出口业务，与中国进口代理商协作，在日系百货店与高级超市等以礼品商品(日西点心礼盒)为中心进行销售。
We are a specialized trading company for China & deal a wide range of products such as grass products, industrial rubber products, women's footwear, and foods for many years in Kobe. In recent years, we focus on exporting Japanese confectioneries. We have already cooperated with the Chinese importer & sold mainly assorted gift sweets at Japanese department stores and high-end supermarkets in China.

丸三爱株式会社 / MARUSAN-AI CO., LTD.

8.1C4-01(09)

Address: 日本 爱知县-冈崎市-仁木町荒下1番地 Japan Aichi-ken-Okazaki-shi-1 Arahita,Nikki-cho
Tel: 021-6306-0396 / 021-6406-0396
Email: zhouhonggen@marusanai-china.com
Web: www.marusanai.co.jp marusanai.co.jp

我司是以大豆为主要原材料，以生产豆乳和味噌为中心的工厂。
We are a manufacturer of soymilk and miso(soybean paste) and other healthy foods.

明志株式会社 / Meishi Inc.

8.1C4-01(101)

Address: 日本 东京-荒川区-西日暮里3-10-31 日笙bldg.二楼 Japan Tokyo-Arakawa-ku-Nissho bldg.#2, Nishi-nippori 3-10-31
Tel: +81-3-6806-5953
Email: info@wellsoon.jp
Web: meishifromtokyo.com

我公司与株式会社渔连北光合作，将在北海道富饶的海洋中捕捞的扇贝，昆布，秋鲑鱼等水产品，借此机会介绍至国内市场。特别推荐鄂霍次克沿岸地区捕捞的扇贝，经太阳光自然干燥而成。从很久以前起就出口至香港地区，台湾地区等海外地区，作为中餐的上乘原料被广泛使用。同时还有将新鲜扇贝的贝柱快速冷冻而成的冷冻扇贝柱，供生吃，可用于刺身等各式菜肴。*株式会社渔连北光为日本最大的渔业协同组合-北海道渔连的全资子公司。
Our company cooperates with Gyoren Hokko Co., Ltd. to introduce aquatic products such as sells scallops, salmon, and other seafood products caught in the rich seas of Hokkaido, and introduce them to the Chinese market. It is especially recommended that the scallops caught in the coastal areas of Okhotsk are naturally dried by sunlight.

日本幸邸食品株式会社 / JAPAN KOTEI FOOD CO., LTD

8.1C4-01(07)

Address: 日本 大阪-大阪-淀川区木川西2丁目19番17号 Japan Osaka-Osaka-2-19-17, Kikawanishi, Yodogawa-ku,
Tel: 021-54711059
Email: he.ping@musee-d-coeur.com
Web: www.musee-d-coeur.com

Established in 2017, Japan Kotei Food Co. runs a top tier pastry brand "MUSEE D'COEUR", also named as "幸　邸", which specialised in gifting purpose and self treating purpose.

三立制果株式会社 / SANRITSU CONFECTIONERY CO., LTD.

8.1C4-01(10)

Address: 日本 静冈县-浜松市-中区中央1-16-11 Japan Shizuoka-Pref-Hamamatsu-city-1-16-11, Chuo Naka-ku
Tel: +81 06-6961-7324
Email: zhang@sanritsuseika.co.jp
Web: www.sanritsuseika.co.jp

创建于1921年，拥有95多年历史的公司。自来以生产各色饼干，“酥饼”等产品。公司总部和主要生产厂家位于日本的中部静冈县，近邻著名美丽的富士山。
Founded in 1921, the company has more than 97 years of history. To produce various kinds of biscuits, Such as "Genji Pie" and "Cookie"and other products. The company's headquarters and major manufacturers are located in Shizuoka Prefecture, central Japan, near the famous beautiful Mount Fuji.

丸善食品工業株式会社 / MARUZEN FOOD INDUSTRY CO., LTD

8.1C4-01(102)

Address: 日本 東京都-板橋区-成増1-30-13 Japan 1-30-13 Narimasu, Itabashi-ku, Tokyo Japan 175-0094
Tel: 03-5998-0202 / 03-5998-0406
Email: lee-kyou@maruzenfood.co.jp k-okuda@maruzenfood.co.jp
Web: htttp://www.maruzenfood.co.jp www.maruzenfood.co.jp/en

丸善食品工业株式会社专业从事天然调味料的生产半个世纪。产品主要服务于各大中餐，日料(拉面，咖喱，居酒屋等) 餐饮连锁店，五星际酒店和航空商务仓供餐，以及方便面，冷冻食品等专业厂家。
All foods are "life" We support industrial use and professional taste with skills that has been cultivated formany years. Maruzen Food Industry focus on natural materials. We pursue "Attractive tasteTaste power" Trustworthy taste and deliciousness. We air the power of the taste all over the world that makes people happy.

有限公司寰球 / C.L Network CO., LTD

8.1C4-01(103)

Address: 日本 Japan kanagawa-totukaku-hiruzuminamitotuka
Tel: 021-62076616
Email: daikyou0903@hotmail.co.jp
Web: www.meito-sangyo.co.jp

我们追求美味、美味和健康，为顾客提供安全、放心、高质量的商品和服务。自1945年（昭和45年）发售字母巧克力以来，它作为“一口巧克力的决定版”广受人们喜爱，一直保持着不变的美味，堪称绝品。
We pursue gusto, fun and health and offer high-quality goods and service by safety and relief for a customer. Since alphabet chocolate is sold (in 1945) in 1945, I'm loved by a lot of people as "definitive edition of bite chocolate" and deliver one piece which is the nonesuch I keep defending the gusto which doesn't change against which.

株式会社太阳绿藻 / Sun Chlorella Corporation

8.1C4-01(106)

Address: 日本 京都-京都-下京区乌丸通五条下大坂町369番地 Japan Kyoto-Kyoto-369 Osaka-cho, Karasuma-dori Gojo-sagaru, Shimogyo-ku
Tel: 86-21-54890222
Email: wada@sunchlorella.cn
Web: www.sunchlorella.com.cn

With its basic philosophy of "One's health is not something that is given by others, but something that one builds for oneself", Sun Chlorella Corporation has placed top priority on supporting everyone's health since its founding in 1969, mainly by providing chlorella products. Our mission is not limited to Japan, and we have directly-owned bases in the USA, Europe, and China.

Kamada Foods International Ltd.

8.1C4-01(109)

Address: 日本 Japan 2-1-59 Irifune-cho, Sakaide, Kagawa 762-8602, Japan
Tel: +81-877-46-0024
Email: aihara@kamada.co.jp
Web: www.kamada.co.jp

Kamada soy sauce was founded in 1789, making soy sauce based on the belief, "making soy sauce at the highest quality, gaining credibility with public benefit" for over 230 years. Dashi soy sauce started 50 years ago to cope with soy sauce diversification. Now 20 continued products more than the Japanese flavor to provide easy and contributes to the improvement of the Japanese culture.

SUGIYO CO., LTD.

8.1C4-01(104)

Address: 日本 Ishikawa-Nanao-10-4-1, Nishimikaimachi, Japan Ishikawa-Pref., -Nanao-City-10-4-1, Nishimikaimachi,
Tel: +81-767-57-0087
Email: y-ueda@sugiyo.co.jp
Web: www.sugiyo.co.jp

SUGIYO has already set up sales offices in major Japan cities like Tokyo, Osaka, Nagoya, Fukuoka and Sapporo. And now we are expanding our sales markets into overseas and regions. Through advanced research and development, we strive to offer a new style of food placing emphasis on winning our customer's smile. We continue to challenge ourselves to accomplish new things with our strong will.

TAKARA SHUZO INTERNATIONAL CO., LTD

8.1C4-01(107)

Address: 日本 Japan Shimogyo-ku-Kyoto-20 Naginataboko-cho, Shijo-dori KarasumaHigishi-iru, Shimogyo-ku, Kyoto 600-8688, Japan
Tel: 021-52589861
Email: zhuwenjuan@takarachina.com
Web: www.takarachina.com

TAKARA SHUZO CO., LTD is the core company of the TAKARA GROUP, which conducts a business dealing with alcoholic beverages, seasonings, and bio-techs, and its business covers alcoholic beverages, seasonings, and raw alcohol in Japanese domestic market.

TOKYO NOODLE CO., LTD.

8.1C4-01(11)

Address: 日本 Japan Tochigi-pref-Ashikaga-shi-1079-1, Fukui-cho
Tel: +81-284-70-1270
Email: info@tokyo-ramen.com
Web: www.tokyo-ramen.com

Founded in 1935 and started dry noodle production. It is a company that started producing instant Noodle in 1965. Currently, we are developing overseas distribution and have export record. All products are manufactured and exported in Japan. It is an ISO 22000 certified factory.

日工株式会社 / NIKKO Co., Ltd.

8.1C4-01(105)

Address: 日本 静冈县-静冈市-葵区平和1-1 Japan Shizuoka-Shizuoka-1-1,Heiwa,Aoi-ku
Tel: 01065132383
Email: ciie2019@nikkogrp.com
Web:

日工株式会社提供高品质日本制造产品。中国大陆以及亚洲地区的日本工厂总代理和特约经销商。主要产品：富士山天然饮用水、日本清酒、有机调味料、有机咖啡、酵母饮料、日本农水产品。
Nikko Corporation provides high quality Japanese manufactured products. General agent and special distributor of Japanese factories in mainland China and Asia. Main Products: Fuji Mountain Natural Drinking Water, Japanese Sake, Organic Seasoning, Organic Coffee, Yeast Beverage, Japanese Agricultural and Aquatic Products.

UMENOYADO BREWERY CO., LTD

8.1C4-01(108)

Address: 日本 Japan 27 Higashimuro Katsuragi-shi
Tel: 886-2-6639-8122
Email: wang@umenoyado.com
Web: www.umenoyado.com

本酒坊是在自古以来传承着诸多神话、传说及有着日本最初酿造日本酒之誉的－奈良－这块土地上，自明治26年（1893年）创建的。迄今為止，以“量小質高”為宗旨精心釀造著奈良地酒。以葛城山系的 伏流水为原料，加之南部制酒技术酿制的酒，其特点是口感清爽细腻。牌号「梅乃宿」的由来是酒坊庭园里具有约300年树龄的梅花的古树上飞来的黄莺，以其婉转优雅的鸣叫声而命名的。
Umenoyado Brewery has been operating in Japan's first permanent capital, Nara since 1893. With the motto "small quantity, high quality", we have been brewing "umakuchi" sake which can recall the history of Nara. Umenoyado will have more then 120 anniversary year. Yet, this is not so old brewery among others in Nara. Like a freshman, we are eager to challenge new thing. Inspired.

株式会社 七尾制果 / Nanao Confectionery Co,. Ltd.

8.1C4-01(110)

Address: 日本 福冈县-北九州市-小仓南区葛原1-9-7 Japan Fukuoka prefecture-Kitakyushucity-1-9-7 Kuzuhara Kokuraminami- ku
Tel: +81-93-472-8770
Email: aat09051@par.odn.ne.jp
Web: nanaoseika.co.jp

我们公司迎来了创业63周年。生产各种烘焙甜点，蛋糕，饼干，甜甜圈，果冻等产品。在口味爱好变化的时代中，我们不会忘记相让顾客吃到一如往常的美味的点心的初心。
This year is 63rd anniversary. We make many and varied sweets, cookies, doughnuts, jelly.And we are also fitting the change of and interesting change, want to develop more delicious products to more customers.

鹰正宗株式会社 / Takamasamune Co.,LTD

8.1C4-01(111)

Address: 日本 福冈县-久留米市-小头町 8-12 Japan hukuoka-kurume-Kogashiramachi8-12
Tel: 0081-942-36-8811
Email: r-meng@takamasamune.co.jp
Web: www.takamasamune.com

清酒，是我们出发的原点。鹰正宗诞生于200年前自然丰富的筑后之国——三潴郡大善寺村（现名：久留米市）。酿造出不仅仅用于节庆日，即使在平时也能轻松享用的美酒是我们的宗旨。一直以来，我们不断地探索，为造出理想的清酒一次次的尝试，最终诞生了鹰正宗清酒系列。我们的每个产品都拥有其自己的个性，请尽情享受美酒与芳香，一起感受造酒人的工匠精神。
We make Japanese Sake,Shochu,Liqueur.

株式会社日田天領水(Hita Tenryosui Co., Ltd.) / Hita Tenryosui Co., Ltd.

8.1C4-01(114)

Address: 日本 大分県(Oita-prefecture)-647(No.647)-日田市中ノ島町(Nakanoshima-town,Hita-city) Japan Oita-prefecture-No.647-Nakanoshima-town, Hita-city
Tel: +81973227777
Email: h-watanabe@h-tenryosui.com
Web: hitatenryosuico.,ltd.

Our company was established on 1999 with US$90million investment for factory. Our factory has ISO22000:2005 and HACCP's certification at Oita-prefecture in Kyushu of Japan. The product Hita Tenryosui called"Natural active hydrogen water" supported for the customer`s healty minds. ②It was selected as "The Wonder500TM" by The MITI in Japan. Monde Selection Highest Gold Award Winner 11 years.

甘利香辛食品株式会社 / AMARI SPICE FOODS CO., LTD.

8.1C4-01(13)

Address: 日本 京都-伏见-13-295,新町 Japan KYOTO-FUSHIMI-13-295, SHINMACHI
Tel: 0756212447
Email: minamino@amarisp.co.jp
Web:

我司在日本京都拥有86年的历史。从创建之后，开发了许多日式调味料（辣椒，胡椒等）以及日式的咖喱。我们公司的以【各户第一，品质第一】为主。所以也获得了FSSC22000认证，可以让每个各户提供安全安心的产品。另外，我们公司在日本是主要跑业务渠道。许多著名的工厂以及餐厅也使用我司的产品。
Amari Spice Foods Co., Ltd. has an 86-year history stretching back to its founding in 1932. we have manufactured and handled a wide range of spices including mentaiko chili pepper, curry powder, Sansho Pepper, and more.

宇拓司贸易株式会社 / UTS JAPAN CO.,LTD

8.1C4-01(112)

Address: 日本 福冈县-福冈市-中央区警固2-17-26-102 Japan Fukuoka Pref.-Fukuoka city-102,2-17-26,Kego,Chuo-ku
Tel: +86-92-732-0880
Email: info@uts-jp.com
Web: uts-jp.com

UTS JAPAN是以将「Made in Japan推向世界」为使命的美容商品制造批发商。我们的使命就是以日本、上海、香港地区为据点，通过国际贸易、将日本制造业与世界联系起来。在这次的中国国际进口博览会上,将展出本公司的自有品牌:美容饮料"玫樱饮"。这是与东京大学共同开发并具有专利的商品，是以玫瑰提取粉为主要成分，做成美容饮料，这也是为解决中国女性烦恼而开发的商品。请让我们用日本安心安全的技术为中国消费者的美丽做出贡献。
UTS JAPAN is a beauty products manufacturer wholesaler whose mission is "Made in Japan to the world". We will exhibit its own brand beauty drink "Plasenta Jewel", mainly containing "rose placenta" that new ingredients co-developed with the University of Tokyo. Contributing to the beauty of consumers with Japanese safe and secure technology.

MINAMI NIHON RAKUNO KYODO CO.,LTD.

8.1C4-01(115)

Address: 日本 Japan Miyazaki prefecture-Miyakonojo-City-32-3,Himegi-Cho
Tel: +81-986-23-3457
Email: m-maehara@dairy-milk.co.jp
Web: www.dairy-milk.co.jp

本公司位于鹿儿岛县和宫崎县的中间地带，地处宫崎县的西南端、雾岛连山的山脚下。使用南九州丰富自然环境下养殖的奶牛产出的鲜奶为原料，为客户提供安全、放心、优质的食品，以牛奶、乳制品为首，同时制造并销售多种甜点和饮料制品。此外,1991年，作为奶农体验型观光牧场的高千穗农场正式开业。
Our company is located at the foot of the Kirishima mountain range at the southwestern end of Miyazaki Prefecture. Using fresh raw milk squeezed from dairy cows grown in the rich natural environment of South Kyushu, the company manufactures and sells many desserts and beverage products, including milk and dairy products.

japan-china north-east products co., ltd

8.1C4-01(14)

Address: 日本 Japan tottori-tottori city-109-1 sanuki kawahara-cyo
Tel: +81-859-85-5101 / +81-858-85-5101
Email: jpn-chn1@gaea.ocn.ne.jp
Web: www.japan-china.jp

we have conducted export and import trade from japan to overseas.this time,we are developing the exclusive sales of "kitaoka honten"s fruit liqueurs for overseas as a general agency for export.the shop was established 150 years ago,located in yoshino that is famous its cherry blossom in nara prefecture.

爱仕递贸易有限公司 / EARTH DISCOVERY CO., LTD

8.1C4-01(113)

Address: 日本 福冈县-北九州市-6F 3丁目8番1号，浅野，小仓北区 Japan FUKUOKA-KITAKYUSHU,-AIM6F 3-8-1,ASANO KOKURAKITA-KU,
Tel: +81-090-9239-8410
Email: s_fujita@earthdiscovery.co.jp
Web: earthdiscovery.co.jp

福冈县北九州市的国际贸易公司。将日本文化承载于商品，希望能一同传达日本的优点。和厂家紧密合作，一起宣传好商品的魅力所在。提供在中国市场尚未流通的有稀少价值的商品，希望和中国企业一起推广。主要出口日本食品。发酵食品如酱油，无酒精的甘酒，健康食品，休闲食品等。这次出展未进入中国市场的冷冻日本和果子。静享四季变化和日本点心的细腻，匠人之精神渗入点滴细节之中。请一定来展位感受一下日本的和果子文化吧！
International Trade Company located in Kitakyushu City, Fukuoka, Japan.We mainly export Japanese food. Fermented foods such as soy sauce, health food, snack food, etc. Products with rare value which haven't been circulated in China.This time we exhibit Japanese traditional cake, Frozen WAGASHI which hasn't yet entered in Chinese market. Enjoy the delicacy of Japanese Culture in every detail.

Nippon Beer Co., Ltd.

8.1C4-01(12)

Address: 日本 Japan Tokyo-Meguro-ku-1-8-10 Kamimeguro,
Tel: +81-3-5489-8888
Email: marketing.pr@nipponbeer.jp
Web: www.nipponbeer.jp

As an independent beer importer in Japan running for 40 years, we have been focusing on importing hundreds of renown international beer over the years. As much as we enjoy "excavating" unique beers, we have a new found love towards creating our own craft beer and non-alcoholic beverages now. Our new mission is to create our very own groundbreaking, trendsetting, and enjoyable beverages.

OZEKI Corporation

8.1C4-01(15)

Address: 日本 Japan 4-9 Imazu Dezaike-Cho Nishinomiya-shi Hyogo 663-8227 Japan
Tel: +81-798-32-2123
Email: shinji.morino@ozeki.co.jp
Web:

OZEKI corporation is one of the leading sake manufacturers in Japan, located in the largest sake brewing area called "Nada Go-go" - Five villages of Nada of Hyogo Prefecture. Ozeki has already established for more than 300 years and from its beginning in 1711 founded by Osakaya Chobei, excellence has always been a top priority.

Shibuya Rex Co.,Ltd.

8.1C4-01(16)

Address: 日本 Japan Fukushima-Fukushima-1. Kitayanome Aza Tonouchi
Tel: +81-24-553-0548
Email: s.arakawa-rex@natsukashiya.jp
Web: www.shibuyarex.com

As a specialty confectionery food trading company for over 60 years, manufacturing partners. And we can help to realize customer's dream, such as consultation of OEM planning from customers in Japan and overseas.

KAGOSHIMA PRODUCTS ASSOCIATION

8.1C4-01(17)

Address: 日本 Japan Kagoshima -Meizan-cho, Kagoshima-city -9-1
Tel: 81-99-2239177
Email: k.nagata@k-p-a.jp
Web:

KAGOSHIMA PRODUCTS ASSOCIATION, established 1989, has more than 450 members of craft, food industry companies and organization. We support exporting the products made in Kagoshima, exhibiting at overseas food trade fairs, business negotiations by inviting overseas buyers, holding the "Kagoshima Fair" at overseas etc. In 2010, resident office in Shanghai was established to develop sales channel.

Higashimaru Co.,Ltd.

8.1C4-01(18)

Address: 日本 Japan Kagoshima-Hioki-city-20, Igakura, Ijuin-cho
Tel: +81-99-273-4653
Email: kyuutoku@k-higashimaru.co.jp
Web: www.k-higashimaru.co.jp

We are developing business in two fields. Sales of complex feed of aquaculture and food business that manufactures and sells instant noodles. We strive to provide safe products.

OGATAMA SHUZO CO.,LTD

8.1C4-01(19)

Address: 日本 Japan KAGOSHIMA-SATSUMASENDAI-CITY-2088 NAGATOSHI-CHO
Tel: +81-996-22-3675
Email: ihoji@satsuma-godai.co.jp
Web: www.ogatama.co.jp

Ogatama Shuzo is a long-established local distillery. It was taken over traditional shochu making to Yamamoto Shuzo known by "SATSUMA GODAI"in 1993. The traditional single-distilled shochu making which sticks to old-ideas is keeping on reviving as well-conformed products to the present time. Hand-made shochu "TEKKAN" as main brand, at Ogatama Shuzo Co., Ltd., is represented.

YAMAMOTO SHUZO CO., LTD

8.1C4-01(20)

Address: 日本 Japan Kagoshima-Satsumasendai-city-2725 Godai-cho
Tel: +81-996-25-2424
Email: ihoji@satsuma-godai.co.jp
Web: www.satsuma-godai.co.jp

"The heart for making Shochu" Yamamoto Shuzo strongly believes the spirit of shochu making is what guarantees the quality. We earnestly develop and improve the technique to carry out that belief.

YAMATA SUISAN SYOKUHIN CO., LTD

8.1C4-01(21)

Address: 日本 Japan KAGOSHIMA-AKUNE-CITY-11,HARUMI-CHO
Tel: 0996-72-3033
Email: te-kawa@yamata-s.com
Web:

We are manufacturing products using fresh seafood from JAPAN with our mission to "wholeheartedly provide safe, secure and delicious Japan-made fish to customers". We have acquired the HACCP certification authorized by the Japan Fisheries Association. With our established quality management system, we provide safe and secure products to all our customers.

滨田酿酒股份公司 / Hamadasyuzou.Co., Ltd

8.1C4-01(22)

Address: 日本 鹿儿岛县-市来串木野市-凑町4丁目1番地 Japan Kagoshima Prefecture-Ichikikushikino City-4-1 Minatomachi
Tel: 81-3-3271-2070
Email: y-nagatomo@hamadasyuzou.co.jp
Web: www.hamadasyuzou.co.jp/en

Established in 1868 in Kaghoshima. The distillery coninues to protect and cherish the genuine taste, art and soul of traditional shochu. Our vision is realizing "Japanese spirits shochu will be one of world's leading liquors".

Wakashiosyuzou Co., Ltd.

8.1C4-01(23)

Address: 日本 Japan Kagoshima-Shibushi-215 Anraku, Shibushi-cho
Tel: 0994721185
Email: uchida@wakashio.com
Web: wakashio.com

Wakashio Syuzo Company produce and sell Honkaku Shochu. They use both high technology and traditional skills that thay have learnt from years of experience. The company aim to continue producing high quality Honkaku Shochu that customers can be satisfied with.

萨摩酒造株式会社 / SATSUMA SHUZO CO., LTD

8.1C4-01(24)

Address: 日本 鹿儿岛县-枕崎市-立神本町26 Japan KAGOSHIMA-MAKURAZAKI-CITY-TATEGAMIHONMACHI26
Tel: 0993721231
Email: tsukinoki@satsuma.co.jp
Web: www.satsuma.co.jp

创业於1936年的萨摩酒造，一直细致的精心的面封酿造，其中，诞生於1955年的“萨摩白波”不仅是当地枕崎，鹿儿岛县内也受到大众的欢迎。
Satsuma Shuzo is one of the most famous "Shochu" makers in Japan.Master brewers skill, quality ingredients and good water are necessary to make good Shochu. Our company policy is "quality first".

Mikunihare Shuzo Co., Ltd.

8.1C4-01(25)

Address: 日本 Japan Toyama-Kurobe-296 Ikuji
Tel: +81-765-56-8028
Email: kikaku@mabotaki.co.jp
Web:

Mikuni-Hare is located in Kurobe-City, Toyama at the mouth of the Kurobe River. Surrounded by a beautiful sea in front and mountain peaks in the back, Meisui springs up at many places in this area.

E-EXPRESS COMPANY

8.1C4-01(28)

Address: 日本 Japan FUKUOKA-FUKUOKA SHI-2-1-31-4F FOENIX MINOSHIMA BLD MINOSHIMA HAKATA KU
Tel: +81-92-432-7718
Email: e-tomi@ii-express.com
Web:

We are a general trading company that handle a wide range of products to food products and liquor from daily necessities. Currently, it mainly exports to China, and in particular, with regard to alcohol and seasoning, our export performance of the former was 10,000 bottle, and the later was 150,000 bottles last year. Based on the desire that we would like them to know how traditional and high qual.

井村屋集团株式会社 / IMURAYA GROUP CO., LTD.

8.1C4-01(31)

Address: 日本 三重县-津市-7-1-1 高茶屋 Japan MIE-TSU-1-1-7 TAKACHAYA
Tel: +81-59-234-2658
Email: s_mimura@imuraya.co.jp
Web: www.imuraya-group.com/english

井村屋创立于1896年,起初是生产销售日式点心"羊羹"的店铺。1947年，井村屋成立股份有限公司，于1964年、1973年推出豆沙包、红豆冰棒等红豆为原料的产品。井村屋于2000年在中国成立了北京京日井村屋食品有限公司，并于2009年在美国成立井村屋USA股份有限公司之后，发展为国际集团公司。2017年成为东京证券交易所第一部门上市公司。目前，井村屋在中国生产销售包子和长崎蛋糕，及各种调味料。

In 1896, a confectionery shop "Imuraya" was opened, beginning with the manufacture and sale of Yokan.In 1964 and 1973, Imuraya launched its long-selling products such as Red bean bun and Azuki Bar (Ice cream). In 2000, we established JIF in China, and in 2009 IMU in U.S.A., developing into a global company. Now manufacturing and selling Chinese buns, Castella cake and various seasonings in China.

暁喜株式会社 / Aki Co., Ltd

8.1C4-01(26)

Address: 日本 中央区本町橋6-19-703-大阪市-大阪府 Japan Chioku HonmachiBashi 6-19-703-Osaka City-Osaka Fu
Tel: 81-66232-8604
Email: info@join-studio.com
Web: www.join-studio.com

1、使用将灭绝的日本原种原料、100%日本产的"日式养生花茶" 2、美味！时尚！健康又美容！方便实惠，倒入热水或浸入冷开水即可享用3、连续多次在"世界健康博览会"等的日本官方专柜和被選為日本公式経済訪問団被作为日本代表商品介绍。本系列产品已经在日本国内外的高级酒店和各式餐饮处，以及大百货公司等大获好评，还被选为美国好莱坞奥斯卡颁奖仪式的贵宾礼品。

The Akatuki tea is made of Combined traditional Japanese 16 herbs and resurrected extinct species from our farmers all over Japan. (from Hokkaido to Okinawa). 100% Natural Free of Additives Caffeine Free Authentic Japanese product The products are introduced as representative products in the official booth of Japan in the World Health Expo for many times in many countries.

WADAMAN CO., LTD.

8.1C4-01(29)

Address: 日本 Japan 9-5, Sugaharacho, Kita-ku, Osaka, japan
Tel: +81-6-6364-4387
Email: chen@wadaman.com
Web:

WADAMAN is a food company established in 1883. We specialize in processing sesame. Etsuji Wada is WADAMAN's president of the 4th generation. He has concentrated on establishing roasting technology for over 40 years and now he is highly rated for the best-roasting expert in Japan. By using great roasted sesame, our artisans concentrate on making paste which is smooth and rich taste.

海日新株式会社 / hynesen Inc.

8.1C4-01(32)

Address: 日本 大阪府大阪市-浪速区-难波中 3-9-1-205 Japan Osaka-shi Osaka-Naniwa-ku-3-9-1-205 Nambanaka
Tel: ＋81667109325
Email: suzue@hynesen.com
Web: hynesen.com/company

世界各地，都有着令人神往的饮食文化。无论IT技术怎样发展，人类终究离不开饮食！我们海日新公司以被誉为天下厨房的大阪为中心积极向世界各地传播日本的饮食文化！我们将利用人工智能，物联网等最先进的IT技术提供最符合当前信息时代需要的跨境电子商务平台！让我们和您一起，在世界的版图上描绘美好的明天！

There're fascinating dietary cultures all over the world. No matter how IT technology develops, human beings can't do without after all! With Osaka as the center of the kitchen of the world, hynesen actively disseminates Japanese food culture to all parts of the world. We will provide the most suitable e-commerce platform! Let's work with you to paint beautiful tomorrow on the map of the word!

BOURBON CORPORATION

8.1C4-01(27)

Address: 日本 新潟県-柏崎市-駅前1-3-1 Japan Niigata Pref.-Kashiwazaki City-1-3-1 Ekimae
Tel: 0257-235037
Email: ri-ran@cn.bourbon-co.com
Web: www.bourbon.co.jp

波路梦集团创建于1924年,是一家以生产饼干、糕点、巧克力、膨化食品、糖果、饮料、冰淇淋、功能性食品为主的综合性生产厂家。公司以追求"令消费者喜笑颜开"，"品味、关怀、永不分离"的两大目标为基准，秉承"质量第一"之理念，大力构筑质量保证体系，积极开展ISO9001，ISO22000，ISO14001以及HACCP认证的质保活动，竭诚为消费者提供安全、安心、健康的食品。

Bourbon Corporation is a food manufacturer founded in 1924 offering a wide variety of products such as biscuits, cakes, chocolates, candies, beverages etc. Bourbon has put its "Quality Assurance First" philosophy into action by proactively acquiring ISO9001, ISO22000, ISO14001 and HACCP certifications to make sure we provide safety, security of food and contribute to the health of consumers.

Izuriki LLC

8.1C4-01(30)

Address: 日本 Japan Tokyo-Chuoku-2-12-4 Kachidoki
Tel: 0449752580
Email: knakaoka@izuriki.com
Web: izuriki.com

Being third generation in this fish industry, we've been trying to supply customers what they demand instead of what we want to sell. As a wholesaler in the fish market, we are able to get and supply almost everything on the market from a whole fish to marine products. I offer an "One-stop service".

千田瑞穗株式会社 / Senda Mizuho Limited

8.1C4-01(33)

Address: 日本 神奈川县-横滨市-保土谷区峰岗町1-21 Japan Kanagawa-Yokohama-1-21,Mineoka-cho,Hodogaya-ku
Tel: +81-45-331-4586
Email: t-kageyama@senda-web.co.jp
Web: www.gohansuki.com

千田瑞穗株式会社自1919年成立以来，一直致力于大米加工和批发业务，已有近100年的历史，是专业生产大米的公司,我们以"专业的技术"为导向，已在大米行业取得独特，卓越的地位。

"Senda Mizuho Group have been dedicating rice milling and wholesale business proudly for nearly 100 years since 1919 as the "Professional of Rice" under the good family tradition. Our "Professional Use" oriented approaches achieve unique and distinguished position in the industry.

华瀛系统株式会社 / Sino-Japanese Engineering Corp.

8.1C4-01(34)

Address: 日本 东京都-港区-三田1-4-28 三田国际大厦18楼 Japan TOKYO-MINATO-KU-18F MITAKOKUSAI BUILDING 1-4-28 MITA
Tel: 021-32070891
Email: chenqinyu@hywaytec.com
Web: www.snjp.co.jp

立志于向全球消费者提供高品质日本商品。为客户提供安心、稳定，且独具文化、历史特色的商品。

Committed to providing High-quality Japanese products to global consumers. We give you stable, safety, alone with the unique culture and history commodities.

广岛鱼市场株式会社 / HIROSHIMA UOICHIBA CO., LTD.

8.1C4-01(37)

Address: 日本 广岛县-广岛市-西区草津港1丁目8-1 Japan HIROSHIMA-HIROSHIMA-CITY-8-1 KUSATSU KOU 1-CHOME
Tel: +81-82-279-2315
Email: s_hikosaka@hirouo.com
Web: www.hirouo.com

我们公司是在日本中西国地区核心城市广岛的水产公司。我们的优势在于利用西濑户内海的海鲜开发高品质产品。它改善了产品的品牌形象。我们公司将为中华人民共和国市场的发展做出贡献。

Our company is a fisheries company in Hiroshima, the core city of Chu-Shikoku region. Our strength is the development of high quality products utilizing the seafood from the Nishi Seto Inland Sea. It improves the brand image of the product. And our company will contribute to the development of the People's Republic of China market.

蝶矢梅酒株式会社 / CHOYA UMESHU CO., LTD.

8.1C4-01(40)

Address: 日本 Osaka-大阪府-大阪府羽曳野市驹ケ谷160-1 Japan Osaka-Habikinoshi-160-1Komagatani, Habikino-shi, Osaka
Tel: 02161416508
Email: shimizu.yuki@choyachina.com
Web: www.choyachina.com

蝶矢梅酒（上海）有限公司创立于1995年，是由蝶矢梅酒株式会社100%出资创建的中国法人。在日本的技术指导和经营管理下,采用中国国产优质青梅，配合日本传统梅酒酿造工艺，成功地开发出了新一代国产正宗梅酒。

CHOYA was founded by the Kondo family in 1914, and at first focused on viticulture. In 1959, the company made the historic decision to start production of Umeshu. Today, CHOYA is the biggest producer of Umeshu in the world. Our mission is to produce and promote the finest Umeshu, made with only natural ingredients. We want our products to make you smile.

SOLIS MARKETING INC.

8.1C4-01(35)

Address: 日本 東京都-千代田区-外神田2-6-4 金村ビル2F Japan tokyo-chiyoda-ku-sotokanda2-6-4 kanemura-building 2F
Tel: +81-3-3527-1140
Email: yuhang@solisline.com
Web: www.solisline.com

公司主营日本酒制品的出口。

Our company mainly deals in the export of japanese alcoholic drinks.

Beishu-center Hiramatsu Co., Ltd

8.1C4-01(38)

Address: 日本 Japan Okayama-Kurashiki-Miyamae 369-1
Tel: +81 86-425-3535
Email: komesake@crest.ocn.ne.jp
Web: jizakesohko.okayama.jp/wp/english

Ichiro s is not just a sake retailer/wholesaler but a developer of local Japanese sake in collaboration with local sake brewers. It also exports local brand sake and liqueurs. What's more, it even organizes brewery tours so that world's sake lovers can experience the Japanese sake culture and enrich their lifestyle.

SAN A 21 Co., Ltd. / SAN A 21.Co., Ltd.

8.1C4-01(41)

Address: 日本 Japan 2-13-34, Hakataekihigashi, Hakata-ku, Fukuoka-city, Japan
Tel: +81-92-474-0554
Email: trade@yamaehisano.com
Web: www.yamaehisano.com

"建立人和产品连接获得新销售和新顾客的未来"我公司是您们的"Japanese Food Concierge（具有日本美食知识的专职人员)"，我们是出口食品的批发公司,并开发对应全世界消费者不同需求的产品。我公司一直致力于对应追加全日本最新、最安全和最健康的食品。我公司有着丰富的营业经验、联系和知识，我们以超越顾客的期待作为目标。

"Connect person and product for the future" We are your "Japanese Food Concierge", always adapting to accommodate the latest culinary additions from all over Japan. We are an exporter and who also develop products to meet customer needs around the world. Our professional staff come from diverse backgrounds always aim to exceed customer expectations.

VEGITAL CO., LTD

8.1C4-01(36)

Address: 日本 Japan Gunma-Maebashi-885-3 Komagatamachi
Tel: +81-5010040594
Email: s.miyakawa@vegital.jp
Web: www.vegital.jp

VEGITAL is the company that only pregnant food manufactured in Japan, we plan and sell prenatal and postpartum foods with a focus on the original product "Maternity Soup". Products are surveyed by more than 3,000 mothers on the dietary habits during pregnancy, and are developed with the cooperation of the hospital, and a registered dietitian and a midwife.

株式会社Rion商事 / Rion Trading Co., Ltd

8.1C4-01(39)

Address: 日本 大阪-吹田市-丰津町11-34-201D Japan Osaka-suita city -201D, Dai 10 Maida Bldg, 11-34 Toyotsu Cho
Tel: +81661554628
Email: i-yang@rion-corp.com
Web: www.rion-corp.com

公司主要在日经营母婴保健类食品，我们的母婴品牌lili&Kiki已经通过正式贸易进口中国市场，目前在高端超市和护理店销售。我们也承接各类食品，母婴类食品，健康食品的OEM。目前已有多年出口业绩并保持销售增长。主要出口国家地区有，中国，新加坡，韩国和东南亚。

We have more than 6 years history in health food, mama& kids care foods in Japan.Our mana& baby brand "Lili&KiKi" has already entered chinese market and now is selling at high end personal care and premium supermarket. We also accept OEM for our customers and has good experience in exporting to China, singapore, Korea, south east Asia etc.

易意集团·日本株式会社 / Foodbook Communications Group Co., Ltd

8.1C4-01(42)

Address: 日本 兵庫県-赤穗市-加里屋磯1139-23 Japan Hyogo-Ako-1139-23 Kariyaiso
Tel: 021-33876293
Email: zhang@yiyish-group.com
Web: www.yiyish-group.com

我们可以与日本厂家直接对接，通过日本厂家直接出口至中国国内。

Since our company buys goods from factories directly, we can import and distribute for China market without any third parties involved.

（公益财团法人）广岛产业振兴机构 / Hiroshima Industrial Promotion Organization

8.1C4-01(43)

Address: 日本 广岛县-广岛市-中区千田町3-7-47 广岛县信息广场4层 Japan Hiroshima-ken-Hiroshima-shi-3-7-47, Sendamachi, Naka-ku
Tel: 021-62076687
Email: suzawa@chinawork.co.jp
Web: www.hiwave.or.jp

在「到到网」的日本旅游人气排行榜上，广岛拥有两处排位居上的世界遗产，即原子弹爆炸遗址和宫岛遗址。广岛是由濑户内海和中国山地的丰富自然资源所孕育的优质食材的宝库。下面介绍在广岛备受欢迎的“美味菜肴”。通过以下微信公众号，可便于得取广岛的相关信息！此网站提供具有吸引力的广岛商品信息，比如关于食品、日本酒、消费品等。
WeChat ID: guangdao_youpin Hiroshima has two world heritage sites, the Atomic Bomb Explosion Site and the Miyajima Site, on the top ranking of "To TripAdvisor" list of popular tourist destinations in Japan.Hiroshima is a treasure trove of quality ingredients nurtured by the rich nature of the Seto Inland Sea and the Chugoku Mountains. The following is an introduction for "delicious dishes", very popular in Hiroshima.

LIBERTE HONPO Co., Ltd

8.1C4-01(46)

Address: 日本 广岛县-吴市-川尻町森3丁目7-14 Japan Hiroshima-Kure-shi-3-7-14 Kawajiricho Mori
Tel: 021-62076687 / 021-62076640
Email: suzawa@chinawork.co.jp
Web: libertehonpo.co.jp/lemonica

广岛吴地区的特产“炸鱿鱼”已风靡全国为在全国推广广岛·吴的著名小吃“炸鱿鱼”，LIBERTE HONPO CO., LTD开发了柠檬小吃系列。不仅美味，包装设计也很时尚。
The special product "Squid fly" in KURE area has become popular all over the country. In order to promote Hiroshima KURE's famous snack "Squid fly", LIBERTE HONPO CO., LTD developed a series of lemon snacks. It is not only delicious, but also fashionable packaging design.

田中食品株式会社 / TANAKA FOODS CO.,LTD.

8.1C4-01(49)

Address: 日本 广岛县-广岛市-西区东观音町3-22 Japan Hiroshima-Hiroshima-shi-3-22 Higashikanommachi, Nishi-ku,
Tel: 0081-82-232-1348
Email: zheng@tanaka-foods.co.jp
Web: www.tanaka-foods.co.jp/index.html

作为拌饭香松的先驱者从1901年创业以来已经有110余年的历史。在1916年推出了称之为「旅行之友」的产品一直销售至今。公司本着「为孩子着想的父母之心」的精神为广大的消费者提供着安心、安全、味美、充满爱心与温馨的食品。田中食品总公司位于日本的广岛市,在日本的东广岛市和二十日市市拥有两个工厂。同时在全日本拥有五个营业所和十二个营业分店。
TANAKA FOODS developed "Ryoko No Tomo", and launched it on the market at the beginning of the Taisho era. Since the establishment of the company to the present day, TANAKA FOODS has been producing safe and delicious Furikake for your culinary enjoyment.

H Food Entertaiment Co., LTD / Hfood Entertainment CO., LTD

8.1C4-01(44)

Address: 日本 广岛县-广岛市-安佐南区安东1-10-29 Japan Hiroshima-Hiroshima-shi-1-10-29 Yasuhigashi, Asaminami-ku,
Tel: 021-62076687 / 021-62076640
Email: suzawa@chinawork.co.jp
Web: h-food-ent.co.jp
h-food-ent.co.jp

广岛向您提供「令人兴奋的美食体验！」。只有在日本才能创造出如此纤细的味道与口感。精心烤制而成。Made in Japan, Baked in Japan。为大家介绍追求美味和可靠安全的点心。
"Hiroshima offers you ""Excited gourmet experience"! Only in Japan such delicate taste and food sense can be created. Carefully baked. Made in Japan, Baked in Japan. Introducing sweets that pursue deliciousness and safety.

樱南食品 / Onan CO., LTD

8.1C4-01(47)

Address: 日本 广岛县-三原市-西野1丁目1-1 Japan Hiroshima-Mihara-shi-1-1-1 Nishino,
Tel: 021-62076687 / 021-62076640
Email: suzawa@chinawork.co.jp
Web: www.o-nan.co.jp

“为了增进笑容与健康……”广岛县三原市老字号饮料制造商。自1955年成立以来，致力于生产客户满意的产品。最近开始使用适合于本地区的原料进行商品开发。与通过大量生产制造而成的价值相比，更加重视所创造商品的安全与美味。
"To promote laughter and health..." Beverage maker established long ago in Mihara City, Hiroshima Prefecture. Since its establishment in 1955, it has been devoted to make the products satisfying customers. Recently, the raw materials suitable for the region have been used for commodity development. Compared with the value produced by mass production, more attention is paid to the safety and delic.

土井酒店 / Doisake Co.

8.1C4-01(50)

Address: 日本 广岛县-吴市-川尻町森2-13-42 Japan Hiroshima-Kure-shi-2-13-42 Kawajiricho Mori,
Tel: 021-62076687 / 021-62076640
Email: suzawa@chinawork.co.jp
Web: doi-sake.com

1984年酒贩店创业，1988年进入食品加工业。2004年开始药用植物种植，使用其提取物，开发无添加无糖商品。
A liquor store was founded in 1984 and the food processing industry began in 1988. Since 2004, medicinal plants have been cultivated, and sugar-free products have been developed using the extracts.

三福至 / SUNFOODS Inc.

8.1C4-01(45)

Address: 日本 广岛县-广岛市-出岛1-26-1 Japan Hiroshima-Hiroshima-shi-1-26-1 Dejima, Minami-ku,
Tel: 021-62076687 / 021-62076640
Email: suzawa@chinawork.co.jp
Web: www.sunfoods.net

本公司自1916年在广岛市创业以来，已有100多年的历史。作为液体调味料制造商，本公司与广岛市的饮食文化共同发展起来，主要商品为；食用广岛特产“什锦煎饼”时使用的“三轮札什锦煎饼调料汁”和“东元什锦煎饼调料汁”。目前，“三轮札什锦煎饼调料汁”与其他调料汁正在出口到美国、英国、加拿大、德国、中国、马来西亚、新加坡等21个国家。
Founded in Hiroshima City in 1916, Sunfoods Inc. marked its centennial anniversary in 2016. As a manufacturer of liquid seasonings for okonomiyaki (Japanese savory pancake), a specialty dish of Hiroshima, and for other popular Japanese dishes, the company has grown gradually as Hiroshima's food culture has evolved.

食协 / Shokkyo CO., LTD

8.1C4-01(48)

Address: 日本 广岛县-广岛市-南区松川町5-9 Japan Hiroshima-Hiroshima-shi-5-9 Matsukawacho, Minami-ku,
Tel: 021-62076687 / 021-62076640
Email: suzawa@chinawork.co.jp
Web: www.shokkyo.co.jp

食协株式会社的业务范围包括提供，米面、食品、燃料、商品开发、送水上门等，具有稳定提供品质优良、安全可靠商品的综合实力，针对由批发店到零售店、办公室、一般家庭等广泛需求的食品进行研发。
Shokkyo CO., LTD business scope includes providing rice noodles, food, fuel, commodity development, water delivery to doors, etc. It has the comprehensive strength to provide high-quality, safe and reliable commodities steadily. It is aimed at the research and development of food which is widely needed from wholesale stores to retail stores, offices and general families.

MAGOKORO Co., Ltd

8.1C4-01(51)

Address: 日本 广岛县-广岛市-安佐北区口田南1-4-11 Japan Hiroshima-Hiroshima-shi-1-4-11 Kuchitaminami, Asakita-ku,
Tel: 021-62076687 / 021-62076640
Email: suzawa@chinawork.co.jp
Web: www.jo-magokoro.co.jp

在当今多样复杂的社会中，我们要坚守的，不会改变的，那就是我们坚信的真心、信念与感恩。我们将会连续不断地对每一个原材料的生长环境及生产土地，不惜投以大量的人力及时间。这就是我们真心公司的经营理念。
Even in such a diverse and complicated society, real change can only be achieved when we step out of our safety zones. We believe it is important to hold faith and sincerity as high principles without forgetting gratitude. One by one, with our raw materials we will build our environment, grow our production and spare no time nor effort.

Kumamoto Prefecture Foreign Trade Association

8.1C4-01(52)

Address: 日本 Japan Kumamoto-ken-Kumamoto-city-3th Floor, Chamber of Commerce and Industry Yokokouyamati Chuo-ku
Tel: (021) 6218-6901
Email: qinji@kumamoto-shanghai.cn
Web: kumamoto-shanghai.cn

The Kumamoto Pref. Foreign Trade Association is a non-profit organization that to establish for the purpose to revitalizing trade exchanges in Kumamoto. In order to promote the exchanges and cooperation in economic and trade fields between China and Japan, the organization established the Shanghai Representative Office in October 2011 with the approval of the Shanghai Business Committee to engage.

滨田酱油株式会社 / Hamada Shoyu Co., Ltd.

8.1C4-01(55)

Address: 日本 熊本县-熊本市-西区小岛6-9-1 Japan Kumamoto-Kumamoto city-6-9-1 Oshima Nishi-ku
Tel: 096-329-7111
Email: JaneLuHJ@heritagefoodsgroup.com
Web: www.hamada1818.com

滨田酱油株式会社位于九州熊本县成立于1818年，是一家有200年悠久历史的酱油酿造企业。滨田酱油所有产品均在熊本本地生产，使用日本传统酱油技术，满足了众多高端餐饮客户的调味品定制需求。为紧跟消费者的脚步，除了酱油产品以外，滨田酱油不断丰富产品种类，其打造的纯正日式料理配方和产品，以创新的方式满足人们对传统饮食的向往和追求。
Established since 1818, Hamada Shoyu Co., Ltd has been a long-standing manufacturer of soy sauces in the Kumamoto prefecture of Kyushu. Its products are locally made in Kumamoto, using premium Japanese Soy Sauce technology, and it has crafted a niche in fulfilling requirements for made-to-order seasonings.

一般社団法人長崎県貿易協会 / Institute Nagasaki Prefecture Association

8.1C4-01(58)

Address: 日本 長崎県-長崎市-大黒町3-1 Japan Nagasaki - Nagasaki city - Daikuromachi 3-1
Tel: +81-(0)95-821-4818
Email: fujiikeiko@gaea.ocn.ne.jp
Web:

长崎县贸易协会上海代表处于1991年7月设立，为促进长崎县与中国友好关系省市在政治经济文化旅游等方面开展交流，积极提供相关信息和业务支持。协助两地企业开展业务，协调企业与中国政府及企业之间的关系。对中国介绍长崎，宣传长崎县的魅力，并寄希望于更多的中国企业来长崎投资，吸引更多的中国公民来长崎旅游。为两地友好交流发挥桥梁作用。
The Nagasaki Prefectural Trade Association Shanghai Representative Office opened in July 1991 as the first overseas office in the prefecture at the Shanghai International Trade Center (20th floor). In the business development with China, we will support your business by making full use of the route with the Chinese government and economic related organizations.

ITSUKIFOODS CO., LTD.

8.1C4-01(53)

Address: 日本 Japan Kumamoto-Pref-Kumamoto-City-945 Sakano Jonan-Machi Minami-Ku
Tel: 81-964-28-7000
Email: ogata.h@itsukifoods.jp
Web: www.itsukifoods.jp/lang/chn

We have been conducting our business steadily as a general manufacturer of noodles for more than 130 years since its establishment and adopting new techniques and creative ingenuity while keeping our traditional spirit to focus on the quality.

Fundodai Goyo Inc.

8.1C4-01(56)

Address: 日本 Japan Kumamoto-shi-Kita-ku-972 Kusunomachi
Tel: +81-364529569
Email: mintetsu.chin@fdgoyo.jp
Web:

江户时代大久保家族在日本熊本县创立了自己的酒蔵。1869年（明治2年）第11代大久保彦四郎创立了大字酱油。传承了150年酿造技术的酱油、味增及调味料深受消费者们的爱戴。近年来利用自社的专利技术研发出的无酒精酱油，透明酱油，平成酱油等高端专利产品拓展海外市场。
Fundodai has been an established soy-sauce company in Kumamoto prefecture since 1869. Since that time we have made every effort to maintain our legacy for flavor and quality. Thanks to the support ofour customers, our company has been in business r 150 years.

株式会社長崎県貿易公社 / Nagasaki Prefecture Trading Corporation

8.1C4-01(59)

Address: 日本 長崎県-長崎市-大黒町3-1 Japan Nagasaki - Nagasaki city - Daikuromachi 3-1
Tel: +81-(0)95-823-0708
Email: boeki@nptcorp.jp
Web: nptcorp.jp

We are established in 1963 as trading company through cooperative investment by Nagasaki Prefecture and prevate companies. We are exporting to and also importing form mainly Asia countries.

高橋酒造株式会社 / TAKAHASHI SHUZO Co. ltd.

8.1C4-01(54)

Address: 日本 熊本県-人吉市-合之原町498番地 Japan Kumamoto - Uyoshi -498 Kazuhara Town
Tel: +86-13818805362
Email: furukawa@minamisangyo.com
Web: www.hakutake.co.jp

高桥酒造建立于1900年（明治33年）100多年的时间里，在熊本县最南端的人吉·球磨地区专做大米烧酒。代表性品牌「白岳」，是球磨米烧酒的代表品牌。在长久以来的历史中一直作为业界的领头品牌被不断制成商品销售。
Takahashi Shuzo is Rise Shochu Maker. Common and different features between Shochu and Sake. Features in common: Same material; Rice and water. Different features: Manufacturing process.

YAMAGUCHI INTERNATIONAL TRADE&CULTURAL CENTER

8.1C4-01(57)

Address: 日本 Japan Yamaguchi-Shimonoseki City-3-3-1,Buzenda-cho
Tel: +81-83-231-5778
Email: keisuke.matsuda@kaikyomesse.jp
Web: www.kaikyomesse.jp

The Yamaguchi International Trade and Cultural Center (formerly established as the Yamaguchi Trade Center in 1962) was founded in 1995. The purpose of the center is to promote international exchange and boost further industry and trade in Yamaguchi Prefecture.

Yamaguchi Prefectural Government

8.1C4-01(60)

Address: 日本 Japan Yamaguchi Prefecture-Yamaguchi-city-1-1 Takimachi
Tel: +81 -83-933-3140
Email: a16900@pref.yamaguchi.lg.jp
Web: www.pref.yamaguchi.lg.jp/cms/a16900/index

Yamaguchi is surrounded by the sea on three sides and is called the "western capital" of Japan.
The climate is relatively mild and comfortable. Visitors will be drawn to the beautiful scenery throughout the four seasons and can enjoy delicious food to their heart's content.

武田制果株式会社 / TAKEDASEIKA CO., LTD.

8.1C4-01(61)

Address: 日本 北海道-札幌市-北区新琴似12-6-8-2 Japan Hokkaido prf-Sapporo-city-6-8-2, 12-jo, Shinkotoni, Kitaku,
Tel: +8111-7614669
Email: a-takeda@takedaseika.jp
Web: www.takedaseika.jp

我公司创始于1964年，是位于日本北海道札幌市拥有55年历史的小麦粉煎饼的生产厂家。主要的销售渠道为北海道的超市和便利店为中心，行销覆盖日本全国，尤其是近几年在海外，特别是在亚洲的销量也是在逐渐增涨。我们基本保持了从创业开始延续下来的传统制作方法，由于尽可能的使用北海道产原料，使我公司的产品在日本国内市场获得了大家的信任，拥有着北海道的小麦粉煎饼市场的首位份额。
We were established in 1964, manufacturer of wheat cracker. Main marketing routes are "Supermarket" and "Convenience store", "Baby and Kids category shop". We expand our sales activity in large area of Japan, also overseas especially East Asia in late years. Our products are made by traditional manufacturing method and materials from Hokkaido. Largest market share on wheat cracker in Hokkaido.

妆美堂株式会社 / SHOBIDO CO., LTD

8.1C4-01(62)

Address: 日本 大阪府-大阪市-大阪市中央区東高麗橋1番10 号ユニ高麗橋 204 Japan OSAKA Prefecture-Osaka City-204,1-10,Higashi Koraibashi, Chuoo-ku
Tel: +81669491888 / +81 669491888
Email: hirobeshobido@gmail.com
Web: shobido.wixsite.com/mysite

SHOBIDO株式会社业务以出口为主，面向全世界，针对国外客户的需要，提供不同的日本产品。目前客户分布于中国大陆、香港地区、澳门地区、台湾地区、东南亚等地区。我们作为日本生产企业的“出口部门”，帮助日本企业扩展海外市场；同时也作为日本海外客户在日本的“采购部门”，为客户保证产品质量，减少风险，节省成本。主要经营日用品、化妆品、婴幼儿食品用品、各种食品、烘焙材料、饮料、酒类等进出口、销售为主。
We are mainly exports many kinds of Japanese products to the foreign customers in the world. Our customers are China, Southeast Asia, etc. We as a "Export department" of Japanese manufacturing companies to help them to expand their overseas markets. And we also as a "purchasing department" for overseas customer.

爱宜食 / Oisix ra daichi Inc.

8.1C4-01(63)

Address: 日本 东京都-品川区-大崎1-11-2 Gate City Osaki East 5F Japan Tokyo-Shinagawa-ku,-Gate City Osaki East 5F 1-11-2 Osaki
Tel: +81-50-5305-0532
Email: takahashi_tetsu@oisixradaichi.co.jp
Web: www.oisixradaichi.co.jp

爱宜食是日本最大的自然派食品宅配企业，年销售额达42亿人民币，以【耕作的人可以给自己孩子吃】为理念，给日本全国约30万各年龄层的客户供应经过一套独特严格的基准的蔬菜水果，畜产品，水产品，加工食品等.除宅配业外，还有店铺销售事业，咨询业，海外事业等业务。香港从2009年开始，上海从2017年开始线上宅配业务，不仅针对居住在现地的日本人，还对中国客人也提供和日本相同基准的商品。
Oisix is the largest company in Japan, which supplys natural food by home delivery, and its annual sales reach 4.2 billion RMB. Basing on the concept that "Farmers can give the nutural food to their own children", Oisix supplys about 300,000 customers of all ages in Japan through a set of unique and strict standards on vergetables, fruits, domesticated animal products, aquatic products, processed foods.

OCT, Inc.

8.1C4-01(64)

Address: 日本 Japan Hyogo-Kobe-KIBC south 253, Minatojima Minamimachi, Chuou-ku
Tel: 81-78-306-0408
Email: octinc@myad.jp
Web: www.octinc.jp

OCT, Inc. has been contributing to the society in the fields of "Hydogen energy", "Envirnment", "Beauty" & "Health" through its works of Hydrogen.

Kewpie Corporation

8.1C4-01(65)

Address: 日本 Japan Tokyo-Shibuya-Ku-1-4-13,Shibuya
Tel: +81334863059
Email: satoshi_wakatsuki@kewpie.co.jp
Web: www.kewpie.com

We were the first in Japan to produce and sell mayonnaise and dressings. While refining our cooking knowledge and technologies, we have produced and sold products ahead of their time, such as meat sauces for prepared foods, baby foods and nursing care foods. Having expanded operations both domestically and abroad, we sell food products for home and food service market.

株式会社P.D.GLOBAL / P.D.GLOBAL CO., LTD.

8.1C4-01(66)

Address: 日本 福冈-福冈市-中央区大名2丁目8-18 7F Japan FUKUOKA-FUKUOKA CITY-TENJIN PARK BLDG. #7F 2-8-18 DAIMYO CHUO-KU
Tel: +81-927351103
Email: renhui@primitive-drive.co.jp
Web: www.pdglobal.co.jp

Trade and merchandising business Tourism · exchange · information dissemination business Research & Planning Business

WAKAYAMA INDUSTRY PROMOTION FOUN DATION / WAKAYAMA INDUSTRY PROMOTION FOUNDATION

8.1C4-01(68)

Address: 日本 Japan Wakayama-Wakayama-Forte Wajima Bldg.6F, 2-1 Hon-machi Wakayama 640-8033
Tel: 81 73 433 2837
Email: kokusai@yarukiouendan.jp
Web: www.yarukiouendan.jp

We perform general support depending on a stage of the business development of all small and medium enterprises (SMEs) in Wakayama and help their overseas business.

Ito-Noen Co., Ltd.

8.1C4-01(69)

Address: 日本 Japan WAKAYAMA PREFECTURE-ARIDA CITY-498-2, takigahara, Miyahara-cho
Tel: +81-737-88-7053
Email: info@ito-noen.com
Web: www.ito-noen.com

Ito-Noen Co., Ltd has the headquarters in Arida city, Wakayama where has the biggest production of Mikan (mandarin orange) in Japan, and is the food maker promoting the sixth industry including farming/processing / sales of the citruses. We have various straight orange juice, orange skin, marmalade and other products of MIKAN.

中田食品株式会社 / NAKATA FOODS CO., LTD.

8.1C4-01(70)

Address: 日本 和歌山県田辺市下三栖1475 Japan 1475,Shimomisu, Tanabe-shi, Wakayama
Tel: 18520140306
Email: kimijima@nakata-trading.com
Web: www.nakatafoods.co.jp

「梅子」(日本的杏) 自古以来，对日本人的健康和长寿发挥着重要的作用。「纪州梅」是在南纪州温暖气候和丰富矿物质的土壤里孕育，完全成熟的梅子果实，南纪州位于和歌山的西南面，是久负盛名的「南高梅」的最大产区。
中田食品是在此区域内最大的梅子（及关联产品）商品制造公司。我司于2018年迎来创立120周年，日本天皇皇后陛下莅临我司工厂，庆祝周年。同年，我司还荣获农林水产大臣奖。
NAKATA FOODS is the largest manufacturing firm of Ume product in the major production are of "Nanko-Ume". The firm manufactures traditional health products made of Ume in Japan.
The firm celebrated the 100th anniversary in 1997 and honorably welcomed the Emperor and Empress of Japan at the factory. In the same year, we also received Minister of Agriculture, Forestry and Fisheries prize.

FT engineering co., ltd.

8.1C4-01(71)

Address: 日本 和歌山-和歌山市-雑賀崎2007-1 Japan WAKAYAMA-WAKAYAMA-SHI-SAIKAZAKI2007-1
Tel: +81-734193000
Email: fte02@wakayama-forklift.com
Web: www.rakuten.co.jp/bussanhin

There are many delicious foods in Wakayama Prefecture. We are a company handling the special products of Wakayama Prefecture. If you are interested in our products, please do not hesitate to contact us.

中野BC株式会社 / NAKANO BC CO., LTD.

8.1C4-01(74)

Address: 日本 和歌山县-海南市-藤白758-45 Japan Wakayama Pref-Kainan City-758-45 Fujishiro
Tel: +81-073-482-1234
Email: liw@nakano-group.co.jp
Web: www.nakano-group.co.jp

中野BC在1932年以酱油生产起家。在那之后致力于酒类产品，开始了烧酒，清酒，梅酒，梅果汁等的生产，还有以梅为主的健康食品研发。本司是拥有日式庭园的酒厂。本司所生产的多种酒类，于近年屡获日本国内外的许多奖项与好评。
Nakano BC had started soy sauce production in 1932. After that, we committed to the production of sake, plum wine, shochu, plum juice, etc. And we have research and development of health foods based on plum. The company is a winery with a Japanese garden. The various alcohol produced by the company have won many awards and praises in Japan and abroad in recent years.

Iwate Prefectural Government

8.1C4-01(77)

Address: 日本 Japan Iwate Ken-Morioka City-Uchimaru10-1
Tel: +81-19-629-5534
Email: AE0003@pref.iwate.jp
Web: www.pref.iwate.jp

Local Government in Japan.

ARKAKI TSUSHO COPORATION

8.1C4-01(81)

Address: 日本 Japan OKINAWA-NAHA CITY-2-11-13 KUME
Tel: 81-98-861-3506
Email: japan@arakaki-tsusho.co.jp
Web: www.arakaki-tsusho.co.jp

We are trading company in Okinawa Japan. We are established from 1980, during 37 years we export Japanese excellent items from Okinawa to Asia. Now we are sailing to Korea, U.S,A, N.Z, Australia. Especially we promote Okinawa Mozuku seaweed which are produced Izena island. And we are selling also other Okinawa local specialty food, for example Sea gapes.

TSUNO FOOD INDUSTRIAL CO., LTD

8.1C4-01(72)

Address: 日本 Japan 94 SHINDEN, KATSURAGI-CHO, ITO-GUN, WAKAYAMA
Tel: 0736-22-0061
Email: zhoujingxiu123@yahoo.co.jp zhou.jingxiu@tsuno.co.jp
Web: www.tsuno.co.jp

After becoming the top seller in Japan, our company has sold the rice oil in special events in Vietnam and other Southeast Asian countries as feasibility study to develop distribution channels for general consumers in foreign countries. It marked good sales because of the high expectation in quality of Japanese foods. We want to continuously expand the sales channels in foreign countries.

株式会社 TOKAN / TOKAN CO., LTD.

8.1C4-01(75)

Address: 日本 愛知県-名古屋市-熱田区川並町4番8号 Japan AICHI-NAGOYA-4-8,KAWANAMI-CHO,ATSUTA-KU
Tel: +81-52-682-5432
Email: tmizuno@tokan-g.co.jp
Web: www.tokan-g.co.jp

TOKAN公司是以名古屋为中心开展事业的食品批发公司。在调味料、饮料、方便面等加工食品的基础上,加上饼干、冷冻食品、冷藏食品、酒类等,拥有日本国内的2000多家食品企业的商品,从“提供美味食材”“构筑有效食品流通体系”“温度供应安心、安全的商品”等角度出发为提高人们的饮食生活做出贡献。
TOKAN CO.,LTD. is a food wholesaler which expands the business mainly in Nagoya and deal with approximately 2,000 food companies. The merchandise handled are processed foods, the confectionery, frozen foood, chilled food and alcoholic beverages etc. We cotribute to make people's diet more prosperous under "Supply good foods","Build an efficent food distribution","Stable secure foods supply".

Iwatekensan.Co., Ltd.

8.1C4-01(78)

Address: 日本 Japan Iwate-Shiwa-gun-1-8-9 Distribution Centre South Yahaba-cho
Tel: +81-19-638-8161
Email: abe@iwatekensan.co.jp
Web: www.iwatekensan.co.jp

he range of products we deal with covers over Iwate Prefecture, and we have a strong relationship with manufacturers in Iwate as well as Iwate Prefecture (administration) as a public-private enterprise called "the third sector".

汤浅酱油有限会社 / YUASA SOY SAUCE Limited

8.1C4-01(73)

Address: 日本 和歌山县-有田郡-汤浅町汤浅 1464 Japan WAKAYAMA-ARIDA-GUN-1464, YUASA, YUASA-CHO
Tel: +81-737-63-2267
Email: miyamoto@yuasasyouyu.co.jp miyamotot@yuasasyouyu.co.jp
Web: www.yuasasyouyu.co.jp

纪州是和歌山的旧名。自古以来，纪州汤浅作为熊野街道的驿站村镇而繁荣兴盛，和歌山县汤浅町是日本酱油的发祥地，1881年创业的《汤浅酱油丸新本家有限公司》是汤浅酱油的老铺子，已经有了一百三十多年的历史。获得了好多次MondeSelection特别金奖。
Yuasa is the birth place of Japanese Shoyu Japanese soy sauce has spread from Yuasa, Wakayama to all over Japan. we make high quality Shoyu with a traditional way in giant wooden barrels to use good quality materials without additives. Our fermentation period is long as 1 to 2 years in natural condition to bring up richness and deep umami.

株式会社 大东通商 / DAITOU TRADING CO., LTD.

8.1C4-01(76)

Address: 日本 东京都-荒川区-东日暮里1-5-7 三之轮大夏7F Japan Tokyo-Higashinippori,Arakawa-ku-7F,Minowa Bldg.,1-5-7
Tel: +81-33875-2391
Email: daitou3@gol.com
Web: www.daitou-trading.com

株式会社大东通商成立于2003年，主要从事业务用冷冻，水煮食品，海鲜类的进出口批发业务。从2009年开始进入网络销售，新增加了婴儿背带类产品并建立自己的品牌napnap，今后会加速向出口中国水产，药妆，糖果酒类，健康食品，介护类等领域的产品。
Established in 2003, Daitou Trading Co., Ltd. is mainly engaged in the business of import and export of frozen, boiled food and seafood. Since 2009, it has entered the network sales, newly added baby carrier products and established its own brand napnap. In the future, it will accelerate the export of Chinese products such as aquatic products, cosmeceuticals, candy, wine, health food and media.

小林桂株式会社 / K.KOBAYASHI & CO., LTD.

8.1C4-01(80)

Address: 日本 兵库-神户-中央区东町123 Japan Hyogo-Kobe-123 Higashimachi, Chuo-ku
Tel: 078328431
Email: tomonori-osumi@k-kobayashi.com
Web: www.k-kobayashi.com/en/index.html

我们小林桂株式会社是1886年创立，是一家已经有一百多年历史的进出口食品贸易公司。我们在CIIE2019博览会展出我们集团属下公司的八幡川酒造株式会社的清酒。八幡川酒造株式会社是1824年创立，作为广岛县的酒产业一直重视传统技术同时不断研发新产品以适应市场的需要。
We, K. Kobayashi & Co., Ltd. have a history of 136 years since the stablishment, and are leading importer of Spices & Herbs and other food stuffs in Japan. At CIIE2019, we will exhibit Japanese Sake of "Yahatakawa shuzo Co., Ltd." which is our group company. "Yahatakawa shuzo Co., Ltd." is a sake brewing company in Hiroshima founded in 1824.

AOMORI PREFECTURAL GOVERNMENT

8.1C4-01(82)

Address: 日本 Japan Aomori-Prefecture-Aomori-city-1-1-1,Nagashima
Tel: +81-17-734-9730
Email: tooru_fujimoto@pref.aomori.lg.jp
Web: www.pref.aomori.lg.jp

"AOMORI PREFECTURAL GOVERNMENT" is local government of Aomori prefecture which is located at the north end of Honshu, the main island of Japan.

AOMORI TRADING CO., LTD

8.1C4-01(83)

Address: 日本 Japan Aomori-prefecture-Hirosaki-city-62-3, Sanpinai-Hukudayachi
Tel: +81-172-88-8115
Email: info@aomoritrading.com
Web: www.aomoritrading.com

A trading company established to export safe and secure high quality Aomori apples that are very popular in Asian countries.
We also export apple juice and other processed foods made with Aomori apples and sake made in Aomori.

SEIKEN CO., LTD

8.1C4-01(84)

Address: 日本 Japan Aomori-prefecture-Hirosaki-city-213, Hakusasndo, Godai
Tel: +81-172-82-4637
Email: t-kasai@ringo-seiken.co.jp
Web: www.ringo-seiken.co.jp

We founded in 1974, cultivate Aomori apples and sale of fresh Aomori apples, also manufacture and sale of apple juice. We manufacture at HACCP compatible processing plant, and have certificated G-GAP since 2015.

Apple and Snack CO., LTD

8.1C4-01(85)

Address: 日本 Japan Aomori-prefecture-Minamitsugaru-Gun-50-10, Kamifunahashi, Kawabe, Inakadate-Village
Tel: +81-172-26-5360
Email: t.inaba@applesnack.com
Web: www.applesnack.com

We established in June 1994 and, processe and sell fried chips of apples, vegetables and fruits.

ROKKA SHUZO CO., LTD

8.1C4-01(86)

Address: 日本 Japan Aomori-prefecture-Hirosaki-city-217, Mukaitonose-Toyota
Tel: +81-172-35-4141
Email: t.oose@joppari.com
Web: www.joppari.com

Hirosaki City, Aomori Prefecture is a castle town that is bright in all four seasons, and we are located in there. We Established in 1719 and merged in March 1972 between three breweries in Hirosaki. We has been making Japanese-sake while protecting traditions.

NANBU SOKEN CO., LTD

8.1C4-01(87)

Address: 日本 Japan Aomori-prefecture-Hachinohe-city-1-9-6,Nagane
Tel: +81-178-32-0258
Email: info@nanbusouken.com
Web: www.nanbusouken.com/index.html

We established in May 2012, sells mulberry tea obtained from mulberry leaves obtained from mulberry fields that do not use agricultural chemicals and chemical fertilizers at the first mulberry tea factory in Japan. Therefore, we are certified by the sixth industrialization of Japan. Mulberry tea has long been used as a Chinese medicine in China, but our company aims to spread widely in China as a.

Takara CO., LTD

8.1C4-01(88)

Address: 日本 Japan Aomori-prefecture-Takko-city-15-3, Moichi, Sanaida
Tel: +81-179-20-8550
Email: kachiyo1@p1.hi-net.ne.jp
Web:

We established June 2002.
We purchase and sale of garlic and processing garlic. (Black garlic, peeled garlic, grated, dried chips, etc.).

HACHINOHE SEIKA CO.,LTD / HACHINOHE CHUO SEIKA CO., LTD

8.1C4-01(89)

Address: 日本 Japan Aomori-prefecture-Hachinohe-city-7-4, kansai, kawaragi
Tel: +81-178-28-8585
Email: kokusaikeizai@pref.aomori.lg.jp
densan@hachinohe-seika.co.jp
Web: www.hachinohe-seika.co.jp

We are a fruits and vegetables wholesale company founded in 1977, and supply fresh and safe seasonal fruits and vegetables grown by producers to all consumers in a stable manner. In addition to the above, we also manufacture and sell Aomori apple juice.

WADAKAN CO., LTD

8.1C4-01(90)

Address: 日本 Japan Aomori-prefecture-Towada-city-1163, Takashimizu, Osaka,
Tel: +81-17-726-7222
Email: j.suzuki@wadakan.net
Web: www.wadakan.net

We are founded in 1900, and manufactures and sells soy sauce, miso, soup, sauce, and fermented seasoning etc. We Acquired certification for quality management system "ISO 9001" in 2001 Sep.

KANESHO CO., LTD.

8.1C4-01(91)

Address: 日本 Japan Aomori-prefecture-Hirosaki-city-15-23, Kuranushicho
Tel: +81-172-57-2121
Email: info@ringosu.com
Web: www.ringosu.com

We were founded in 1912,and we Manufacture and sell vinegar, soy sauce, soup and dressing. Apple vinegar is the only product in Japan manufactured by "Grating method" and "Aging method in barrel"which is our own manufacturing technology. This manufacturing technology can Apple vinegar make mild and deep taste.

板桥贸易株式会社 / Itabashi Trading Co., Ltd

8.1C4-01(92)

Address: 日本 东京都-中央区-銀座2-11-4 富善ビル3階 Japan TOKYO-CHUO-KU-3F TOMIZEN BLDG ,2-11-4 GINZA
Tel: 021-62531100
Email: zhyl@itabashitrading.com
Web: www.itabashi-trading.com

进口销售的代理业务●食品，医疗外科器械，节能·环境关联器械等【中国总代理】株式会社メニコン(Menicon)，株式会社モノリス，其他。
Import sales agency business ● Food, medical surgical equipment, energy saving, environmental related equipment, etc. Chinese general agent Menicon Co., Ltd., モノリス, others.

株式会社神明 / SHINMEI Co., LTD.

8.1C4-01(93)

Address: 日本 东京都-日本国东京都中央区日本桥小网町16-15 Japan Tokyo-16-15, Koami-Cho, Nihonbashi, Chuo-ku, Tokyo, 103-0016 Japan
Tel: 15110001045
Email: liqiang@shinmei.cn
Web: www.akafuji.co.jp

株式会社神明成立于1950年（日本昭和25年），成立之初主营大米、小麦及相关米面制品。随着公司的发展壮大，营业范围已扩大到砂糖、食用油、生鲜食品等各大领域。目前，在日本拥有自己的大米和米饭加工工厂，在中国香港及上海等地也设有分公司。公司的理念是通过大米保护好日本的水田和文化，创造出美味与幸福，为大家的美好饮食生活做贡献。为了提供安全安心安定的产品，公司仍不懈努力，茁壮发展中。
Established in1950, main business is rice, wheat, sugar, edible oil and fresh food. It has its own rice and rice processing factory in Japan.And also have branches in Hong Kong and Shanghai.The company's philosophy is to protect the Japanese paddy fields and culture through rice, create deliciousness and happiness, and contribute to the good eating and drinking life of everyone.

有限会社 K&P企画 / YUGENKAISHA K&PKIKAKU

8.1C4-01(94)

Address: 日本 神奈川县-川崎市-川崎区浅田3-12-6-506 Japan KANAGAWAKENN-KAWASAKISHI-KAWASAKIKU ASADA3-12-6-506
Tel: 158-0071-1146
Email: kandpkikaku@yahoo.co.jp
Web:

本公司主营批发，销售，真丝服装，日本清酒，烧酒，梅酒，调味品，食品等等。有实体店。中，日两方都有独立的进出口渠道。本公司的产品都为厂家直销，OEM对应。欢迎垂询。
The company's main wholesale, sales, silk clothing, Japanese sake, Shochu, plum wine, condiments, food,etc.China and Japan both have independent import and export channels. The company's products are direct sales to manufacturers, OEM corresponding.If there is anything we can help you with, please do not hesitate to contact us.

NATIONAL FEDERATION OF AGRICULTURAL COOPERATIVE ASSOCIATIONS(JA ZEN-NOH)

8.1C4-01(96)

Address: 日本 东京都-千代田区大手町1-3-1 JA Building Japan Tokyo-1-3-1 otemachi, chiyoda District, JA Building
Tel: +81362718083
Email: sakai-hiroaki-z@zennoh.or.jp
Web: www.zennoh.or.jp

成立于1947年,是全国等级的一个联合会。主要业务是销售会员的农产品并提供给农户农业生产资材。事业目的是「帮助会员从事农业生产。改善生活水平提高社会地位。提供农业生产资材和生活用品，销售农畜产品。」。
The ZEN-NOH Group is responsible for the marketing and supply business of the JA Group, including the sale of agricultural products and the supply of materials for use in agricultural production. It works with primary-level JAs, who are members of the ZEN-NOH Group, and prefectural federations to create economies of scale to ensure the competitiveness of marketing and supply activities.

KITOKU SHINRYO

8.1C4-01(97)

Address: 日本 Japan Tokyo-Chiyoda-ku-2-8 Knada-Ogawamachi
Tel: 81-3-3233-5156
Email: k-omura@kitoku-shinryo.co.jp
Web: www.kitoku-shinryo.co.jp

With over a hundred years in rice business, the Kitoku Shinryo Group has been endeavoring to respond to the voice of the market place in order to achieve a good relationship with stakeholders, customers, suppliers, shareholders and local communities.

jetro

8.1C4-01(98)

Address: 日本 东京-东京-东京都港区赤坂1-12-32 Japan Akasaka 1-12-32, Port District, Tokyo
Tel: 021-62700489
Email: pcs08@jetro.go.jp
Web:

jetro.

JSC Gamma Vkusa

8.1C4-02(02)

Address: 白俄罗斯 Belarus Minsk Region-Kleck-Kirova Street, 2
Tel: +375179362217
Email: lucko@gammavkusa.by
Web: www.gammavkusa.by

Production of baby food, juices and nectars in TetraPack packaging, canned food for general purposes.

JSC "Gorodeya Sugar Refinery"

8.1C4-02(03)

Address: 白俄罗斯 Belarus 222611, Minsk region, Nesvizh district, Gorodeya, 2, Zavodskaya str
Tel: +375177062459
Email: marketing@gsr.by
Web:

Food production (sugar, fruit products, fruit and vegetable preservation).

JV JSC Kommunarka

8.1C4-02(04)

Address: 白俄罗斯 Belarus Minsk-Aranskaya 18
Tel: +375173281077
Email: marketing@kommunarka.by
Web: kommunarka.by

Confectionery factory.

KRASNY MOZYRYANIN, JSC

8.1C4-02(05)

Address: 白俄罗斯 Belarus Gomel region-Narovlya-Fabrichnaya street, 2
Tel: +375235543325
Email: priemnaya@korovka.by
Web: www.korovka.by/en

Milky sweets; sweets, glazed with chocolate and confectionery icing (fruit-jellied, cream, beaten up and with combined parts); marshmallow kinds of products (sprinkled with sugar powder, peanuts, coconut, glazed with chocolate or confectionery icing); fruit-jelly (sprinkled with sugar, coconut, glazed with confectionery or chocolate icing); toffee (wrapped and tirage toffee).

OJSC "Krasny pischevik"

8.1C4-02(06)

Address: 白俄罗斯 Belarus 213805, Bakharov str., 145, Bobruisk, Republic of Belarus
Tel: +375225482731
Email: himakov_export@zefir.by
Web: www.zefir.by

OJSC "Krasny pischevik" modern confectionery enterprise of the Republic of Belarus, with its tradition and rich history. The enterprise produces: zephyr, halva, dragee, marmalade, toffee, chewing marmalade, sweets.

Open Joint Stock Company "Krinitsa"

8.1C4-02(07)

Address: 白俄罗斯 Belarus Minsk region-Minsk-52 Radialnaya Str.
Tel: +375 17 299 -23 -75
Email: e.lapteva@krinitsa.by
Web: www.krinitsa.by/en

OJSC Krinitsa is the largest brewery in beer industry in Belarus. Since 1975 we produce beer, kvass, non-alcoholic drinks and food concentrates. We possess the single bottling machine for cans in the country and therefore provide services of bottling in cans for macro breweries in Belarus. Annually the capacities of OJSC Krinitsa allow us to produce up to 240 million liters of brew.

Malorita Preserved and Dried Vegetables Plant JSC

8.1C4-02(08)

Address: 白俄罗斯 Belarus Brest region- City Malorita-Zavodskaya, 9
Tel: +375165120999
Email: maloritakosk@yandex.by
Web: www.toptyshka.by

JSC "Malorita cannery and vegetable drying plant" uses all the strengths and resources of the Belarusian land to produce baby food and juices for children, which preserve all the sunlight energy, vitamins and nutritious micro-elements, fruit and vegetable baby food of excellent quality.

JSC "Mashpischeprod"

8.1C4-02(09)

Address: 白俄罗斯 Belarus Minsk region, Pukhovichi district-Maryina Gorka-15 Chapaeva
Tel: +375171347685
Email: export@oaompp.by
Web:

Company JSC "Mashpischeprod" is the only in Belarus manufacturer of potato flakes and the first manufacturer of potato chips plates, as well as a manufacturer of food malt for baking.

MINSK KRISTALL GROUP Holding / MINSK KRISTALL - MANAGING COMPANY OF HOLDING MINSK KRISTALL GROUP, OJSC

8.1C4-02(10)

Address: 白俄罗斯 Belarus Minsk-Minsk-15, Oktyabrskaya St., Minsk, 220030
Tel: +375172178463
Email: tarasiuk@kristal.by
Web:

VODKAS, BITTER, BALSAM, NASTOIKA, DISTILLATES.

MINSK SPARKLING WINE FACTORY

8.1C4-02(11)

Address: 白俄罗斯 Belarus Minsk region-Minsk-Radialnaya str, 50
Tel: +375172992730
Email: v.kucharavaya@wines.by
Web: www.wines.by

Production of high-quality sparkling and natural grape wines from selected grape varieties, as well as low-alcoholic wine cocktails!!! Export to different countries of the world.

«莫济里盐» 开放式股份公司 / Mozyrsalt Open Joint Stock Company

8.1C4-02(12)

Address: 白俄罗斯 Belarus Gomel region-Mozyr-247760 Mozyr, Republic of Belarus
Tel: +375 236 214822
Email: ved@mozyrsalt.com
Web: www.mozyrsalt.by

1982年白俄罗斯工厂-“莫济里盐”开放式股份公司第一次生产了超级的食盐。现在 我们的工厂是现代的企业,工作时间是整日整夜的，“莫济里盐”的工作人员共计一千多人。商品目录 数出90多物项。产品是用特级盐制造的，氯化钠含量超过99.7%。Belarusian producer of salt extra grade of JSC "Mozyrsalt" the first production was released in 1982. Today the plant is a modern enterprise, working around the clock, employing more than 1,000 qualified specialists and workers. The products of JSC "Mozyrsalt" are made from high quality salt extra with a content of sodium chloride in excess of 99.7%.

JSC Slutsk Sugar Plant

8.1C4-02(14)

Address: 白俄罗斯 Belarus Belarus-Slutsk-6 Golovashenko Street
Tel: +3751795-4-69-91
Email: sales@sugar.by
Web:

JSC Slutsk Sugar Plant keeps one of the most stable positions among competitors in the domestic market of the Republic of Belarus. Our products have competitive prices, and the manufacturing is economically efficient. JSC Slutsk Sugar Plant aims to produce 30% or more of the sugar in Belarus. We achieve it by widening the market and by enlarging our presence in it.

JSC Spartak

8.1C4-02(15)

Address: 白俄罗斯 Belarus Gomel-Gomel-Sovetskaya Str 63
Tel: +375232304495
Email: scherbakov@spartak.by
Web:

Let us introduce confectionery factory "SPARTAK", one the biggest manufacturers of confectionary goods in the Republic of Belarus. The factory exists for more than 95 years, it is well-known abroad and has been appreciated by millions of consumers of all ages and is continuously coming up to their expectations.

Municipal Unitary Production Enterprise "Confectionery factory "Vitba"

8.1C4-02(16)

Address: 白俄罗斯 Belarus Vitebsk-210038 Vitebsk 3 Korotkevich Str.
Tel: +375212671287
Email: vitba_ovd@mail.ru
Web: www.vitba.by

Confectionery factory "Vitba" is the leader on the breakfast cereals market and one of the largest producers of flour confectionery products in the Republic of Belarus. We produce a wide range of products for different occasions and invent new forms and tastes to please our loyal consumers. We use the best European equipment and guarantee the highest quality of our products.

JSC AGROKOMBINAT DZERZHINSKIY

8.1C4-02(17)

Address: 白俄罗斯 Belarus Minsk region-Fanipol-222750
Tel: 8 01716 217 92
Email: agrovedby@gmail.com
Web:

JSC Agrokombinat "Dzerzhinskiy is the largest enterprise in the Dzerzhinsk district - 18,000 hectares of agricultural land. Our main activities iclude the industrial production, processing and realization of poultry meat products. We would be glad to provide our customers with the poultry meat of high quality!

JSC "Zdravushka-milk"

8.1C4-02(19)

Address: 白俄罗斯 Belarus Borisov -St. 222514, Kovalevsky, 2A
Tel: +375 177 79 29 43
Email: sales@zdravushka.by
Web: www.zdravushka.by

JSC "Zdravushka-milk" is one of the oldest and most famous manufacturers of dairy products in the Republic of Belarus. Here produce dairy products for every taste, for all groups of consumers.
Since 2004 PREDPRIYATIE products manufactured under the trademark "Zdravushka". The portfolio includes more than 145 products. Its high quality is evidenced by the ever expanding geography of sales.

Joint Stock Company Milkavita

8.1C4-02(21)

Address: 白俄罗斯 Belarus Gomel region-Gomel-1, Brat'ev Lizyukovyh Street, 246029
Tel: +375293338503
Email: sale@gomelmilk.by
Web: www.gomelmilk.by

JSC «Milkavita» is one of the largest milk processing and dairy production center the Republic of Belarus. Our products are represented by three main brands: «Milkavita» «Moya Slavita». dairy products are certified in accordance with the requirements of national and international standards: STB ISO 9001, STB 1470, STB ISO 22000, FSSC 22000, OHSAS 18001.

JSC " Mogilev meat processing plant"

8.1C4-02(22)

Address: 白俄罗斯 Belarus Republic of Belarus, Mogilev, Dimitrova str., 11
Tel: +375445885088
Email: mkreklama2016@mail.ru
Web:

OJSC "Mogilev Meat-processing plant" is one of the largest enterprises of the Republic of Belarus, which was founded in 1905. During this time, the plant has gone through a long and complicated path of transformation into a stable and modern enterprise. Our enterprise is a reliable, long-term business partner, who has maintained high quality of products.

JSC «Slutsk Cheese Factory»

8.1C4-02(23)

Address: 白俄罗斯 Belarus Minsk Region-Slutsk-14 Tutarinov St.
Tel: +375179555502
Email: slsk.marketing@mail.ru
Web: www.complimilk.com

Slutsk Cheese Factory, JSC is one of the largest producers of natural milk products in the Republic of Belarus. The factory processes up to two thousand tons of milk per day.
JSC «Slutsk Cheese Factory» is one of the leading producers of cheese, butter, ice cream and powder milk products in the Republic of Belarus. It offers to ensure your region by high-quality dairy products.

The Belarussian State Concern of Food Industry "BELGOSPISCHEPROM"

8.1C4-02(24)

Address: 白俄罗斯 Belarus Minsk-Aranskaya str. 6
Tel: +375172156082
Email: klimakova@bgp.by
Web: bgp.by

Belgospischeprom is the Belarusian state food industry concern incorporating 46 food producers. Beverage & Liquor, Sweet & Snacks, Health Products, Condiment.

Grodno Tobacco Factory" Neman

8.1C4-02(25)

Address: 白俄罗斯 Belarus Grodno-Grodno-st. Ordzhonikidze 18
Tel: +375 152 79-15-00
Email: info@tabak.by
Web: www.tabak.by

One of the oldest enterprises in the country, which throughout its century and a half history has never changed the original specialization, carrying through the history to the present day its rich traditions and high name!

LIDSKIYE PISHCHEVYE KONTSENTRATY, JSC

8.1C4-02(27)

Address: 白俄罗斯 Belarus Grodnenskaja-Lida-Tavlaya str.,11
Tel: +375154522431
Email: wed@mail.ru
Web: lidkon.by

JSC "Lidapishchekontsentraty" manufactures complex food additives for meat processing industry, which are intended for use in the production of boiled, half smoke, boiled and smoked sausages, chopped ham.

识别系统中心 / IR&D «ID Centre»

8.1C4-02(30)

Address: 白俄罗斯 Belarus Minsk -Academicheskaja str., 15/2, 220072
Tel: +375 17 294 90 80
Email: china@ids.by
Web: expo.ids.by

识别和可追溯性技术，可追溯性和食品安全，标记和周转合法性，银行电子护照的货物。
Food products.

State Association “Vitebsk concern “Meat and Dairy Products”

8.1C4-02(32)

Address: 白俄罗斯 Belarus Vitebsk-Vitebsk-General Beloborodov str., 2
Tel: +375291314550
Email: ved@vitmmp.by
Web: www.vitmmp.by

The State Association "Vitebsk concern" "Meat and Dairy Products" is one of the largest associations in the Republic of Belarus of meat and dairy, flour and cereals, horticulture, bakery and confectionery products, animal feed, premixes, canned fish.

MUE Minskhlebprom / CUE Minskhlebprom

8.1C4-02(33)

Address: 白俄罗斯 Belarus Minsk-17 Vitebskaya street
Tel: +375172038064
Email: export@minskhleb.by
Web:

Minskhlebprom is the largest enterprise in the Republic of Belarus of the baking industry. Our structure includes 6 bakeries. We supply the following products:bread and bakery products, rusks and ring-shaped crackers, cookeis and spice-cakes, waffles and waffle cakes, confectionery. Our company is interested in supplying our products to the Chinese market.

JSC "Verkhnedvinsk butter-cheese plant"

8.1C4-02(34)

Address: 白俄罗斯 Belarus Vitebsk-Verkhnedvinsk district-Republic of Belarus
Tel: +375215153210
Email: vdvinsk-mcs@tut.by
Web: yancheese.by

OJSC «Verkhnedvinsk butter-cheese plant» is one of the leading cheese producers in the Republic of Belarus. The company specializes in hard cheese, butter, whey powder, and demineralized whey powder.

OJSC «Vitebskhlebprom»

8.1C4-02(36)

Address: 白俄罗斯 Belarus Vitebsk-5, Gorbachevskogo Str.
Tel: +375212665221 / +37533 693 22 01
Email: mvhp@mail.ru
Web: vhp.by

OJSC "Vitebskhlebprom" – is a modern bakery enterprise which produces a wide range of bakery, rusk, and confectionery production, whole grain crisp- bread. Our goal is to produce the necessary, useful and high-quality products that meet consumer's demands.

MINSK DAIRY PLANT NO.1, JSC

8.1C4-02(37)

Address: 白俄罗斯 Belarus Minsk-185, Soltysa str.
Tel: +375172464376
Email: silvanovich.ma@mail.ru
Web: www.belmilk.by

For many years «Minsk dairy plant number 1» produces dairy products from natural cow's milk and remains the leader of the dairy industry of the Republic of Belarus.

OJSC «Rogachev Tinned Dairy Industrial Complex»

8.1C4-02(39)

Address: 白俄罗斯 Belarus Gomel region-Rogachev-Republic of Belarus, 247671, Gomel region, Rogachev, Kirova str.31
Tel: +375233927185
Email: marketing@rmkk.by
Web: rmkk.by

JSC "Rogachev Milk Canning Plant" is the largest producer of dairy canned food in the territory of the CIS and this is its main activity. In a wide range of products there are also: solid, semi-solid and processed cheeses; dry dairy products; whole milk products; baby food.

“图罗夫乳制品联合企业”股份公司是 / Turov Dairy Industrial Complex OJSC

8.1C4-02(40)

Address: 白俄罗斯 Gomel region-Turov-白俄罗斯共和国戈梅利州日特卡维茨基区图罗夫市列宁斯卡大街154号 Belarus Gomel region-Turov-154, Leninskaya street
Tel: +375173087186
Email: nc@turovmilk.by
Web: www.turovmilk.cn www.turovmilk.by

“图罗夫乳制品联合企业”股份公司是一家现代化高科技公司，生产半硬半软的意大利奶酪。采用意大利技术生产半硬和软奶酪的现代高科技企业于2013年开始运营。企业的产品涵盖80个不同的种类。奶酪82%出口。
The Open Joint Stock Company "Turov Dairy Industrial Complex" – is an up-to-date highly technological enterprise for production of semi-hard and soft cheeses according to Italian technologies. Production of traditional Italian Cheeses: mozzarella soft and mozzarella semi-hard, mascarpone, cream cheese, ricotta, provola fresca and provola affumicata, provoletta, scamorza, grill cheese.

UE GLUBOKOE DAIRY-CANNING FACTORY

8.1C4-02(45)

Address: 白俄罗斯 Belarus Vitebsk region-Glubokoe-211821
Tel: 8 02156 55-131
Email: alesya@glmkk.by
Web:

Glubokoe dairy-canning factory is one of the largest manufacturer of dairy products both in the Republic of Belarus and in the countries of the CIS. Today, Glubokoe dairy-canning factory manufactures about 80 kinds of natural dairy products satisfying the tastes of the most demanding consumers. High quality, modern equipment from leading manufacturers, well-developed logistic system, clear positi.

INTERSTARCH UKRAINE LLC

8.1C4-03(02)

Address: 乌克兰 Ukraine KYIV-29A ELEKTRYKIV STR., 04176
Tel: +380 44 3517855
Email: sobolevska@upi.com.ua
Web: www.interstarch.com.ua

As a manufacturer and supplier, Interstarch Ukraine offers a wide range of products, obtained by processing corn and wheat: native and modified starches, glucose, maltose and glucose-fructose syrups, gluten-free ingredients, corn oil, wheat gluten, etc. Interstarch products are regularly tested by production and independent laboratories to ensure stable quality and meet food safety requirements.

MOROZPRODUCT

8.1C4-02(42)

Address: 白俄罗斯 Belarus Republic Of Belarus- Minsk- str. Heroes of the 120th division, 3A
Tel: +375173000099
Email: slsk.marketing@mail.ru
Web: www.moroz.by

dairy products, ice cream.

Unitary production enterprise "Polotsk dairy plant"

8.1C4-02(47)

Address: 白俄罗斯 Belarus Belarus-Polotsk-211400, Vitebsk region, Polotsk, Frunze str., building 35
Tel: +375214481120
Email: polotskmilk@mail.ru
Web: www.polotskmilk.by

Our company is a reliable business partner, has been working for more than 70 years in the market of dairy products; it is one of the leading Belarusian companies on the export of dairy products. The basic directions of activity of the enterprise is production and sale of milk powder and butter. About 55% of production is intended for export.

KERNEL

8.1C4-03(03)

Address: 乌克兰 Ukraine Kyiv-3, T. Shevchenka Lane
Tel: +38(044)4618801
Email: i.rudenko@kernel.ua
Web: www.kernel.ua

Kernel – the world's leading and the largest in Ukraine producer and exporter of sunflower oil, and major supplier of agricultural products from the Black Sea region to world markets. Kernel exports its products into more than 80 countries of the world. Since November 2007, the shares of the company are traded on the Warsaw Stock Exchange (WSE).

Promin-12,LLC

8.1C4-03(06)

Address: 乌克兰 Ukraine kyiv-kyiv-Shevchenko Street
Tel: +380935668798
Email: qizhi@wukaasset.com
Web:

Ukrainian famous agricultural producer, the annual farm products are sold to China and around the world.

KVINFOOD, LLC

8.1C4-02(44)

Address: 白俄罗斯 Belarus Republic of Belarus -Grodno-16 Miasnickaja str.
Tel: +375(152)44-30-29
Email: export3@grodfood.by
Web: grodfood.by/en

Kvinfood produces canned meat in four categories: Canned meat Grodfood Mash with meat Grodfood Pate Grodfood Appetizer Grodfood.

FULON, IC

8.1C4-03(01)

Address: 乌克兰 Ukraine Kyiv-33 Velyka Zhytomyrska str.,
Tel: +38 044 279 17 50
Email: ceo@ucibc.net
Web:

Food trading company, Importer & Exporter.

Oushen Food LLC

8.1C4-03(04)

Address: 乌克兰 Ukraine Kyiv-st. Saksaganskogo, 119
Tel: +86 25 83605992
Email: 1204844959@qq.com
Web: www.oushenfood.com.ua

Oushen Food Ltd. is a company that produces high quality, environmentally friendly and safe European-level products. The production facilities of the enterprises were located in the ecologically clean region of Ukraine - Poltava region in the village. Dykanka and Zinky. The main activities of the enterprise are the production and sale of pre-packaged products of sun leather, sunflower cake, husk.

PASTA FACTORY KYIV, TRADE HOUSE, LLC

8.1C4-03(07)

Address: 乌克兰 Ukraine Kyiv-142, Kyrylivska Str.
Tel: +38 (050) 388-74-73 / +38 (095) 272-00-26
Email: export@kmf.ua
Web: www.kmf.ua

Our company's mission is to satisfy the most demanding tastes of our customers. The plant operates on modern equipment. Pasta Factory Kyiv thoroughly selectsits suppliers and uses only highest-grade wheat flour and spring water in its production, without anydyes, GMOs, or food additives All pasta products manufactured by our factory meet Ukrainian and European the certificate requirements.

Ukrainian Food Export Board, Association

8.1C4-03(07)

Address: 乌克兰 Ukraine Cherkasy-Uman-3, Ivana Honty Str.
Tel: +38 (067) 441 06 02
Email: bsh@ukrainian-food.org
Web: ukrainian-food.org

Ukrainian Food Export Board is a non-profit association of food producers. We help our members to enter new markets and gain a foothold in traditional ones, give them analytical information and provide advice on opportunities and conditions for trading activities abroad.

JV "VITMARK-UKRAINE" LLC

8.1C4-03(08)

Address: 乌克兰 Ukraine Odessa-22,Visokiy lane,
Tel: +380482 34 40 45
Email: e.danilyuk@vitmark.com
Web: www.vitmark.com

JV "Vitmark Ukraine" LLC is a major player in the Ukrainian soft drinks industry and one of the leaders in Quality Fruit Juices, Drinks and Baby Food markets. Company has been operating in Ukraine for 20 years, and was set up on the basis of the largest national baby food factory with history of over 90 years. Propose the private label projects for our customers.

Sofia Company

8.1C4-03(09)

Address: 乌克兰 Ukraine Kyiv-Room 718, Antonovicha str 172
Tel: +380731001988
Email: 75562458@qq.com
Web:

Ukrainian trade company that involved in export agro and food products export to China.

"AVK CONFECTIONERY" LLC

8.1C4-03(10)

Address: 乌克兰 Ukraine Kyiv-82-a, Mezhigirska Str., bld. B
Tel: +38 044 206 85 90
Email: anton.bidziura@avk.com.ua
Web: www.avk.ua/int/en

AVK Company is one of the leaders of the national confectionery market. We are among the three largest confectionery companies in Ukraine by the volume of production. The history of AVK is more than quarter of a century of a dedicated teamwork to achieve the highest result - impeccable quality of products.

Production and commercial firm "Perlyna Polissia", LLC

8.1C4-03(10)

Address: 乌克兰 Ukraine Zhytomyr -Pershyj Lyvarnyj 28/31
Tel: +380412420898
Email: perlynazt@ukr.net
Web: perlyna-polissya.com

«Perlyna Polissia» a company that produces environmentally friendly and rich in biologically active substances products. All products are very useful for the body, as it consists of natural substances and for the same reason, it has no negative effects!

«GRADOIL REFINERY» LLC

8.1C4-05

Address: 乌克兰 Ukraine Kiev-Kiev-Leipzig 15a
Tel: 390507045360
Email: xu@gradoil.com.ua
Web: www.gradoil.com.ua

«GRADOIL REFINERY» LLC（乌克兰格兰多利亚）集团在乌克兰是葵花油出口10强企业。集团拥有自己的压榨毛油厂，精炼油厂，罐装流水线，产品100%全部出口，产品销售覆盖美国，法国，波兰，西班牙，以色列，迪拜，马耳他，安哥拉，巴勒斯坦，新加坡，中国等30多个国家。明星品牌VAZA质量上乘，品质始终如一，值得您信赖。

«GRADOIL REFINERY» LLC Group is one of the top 10 exporters of sunflower oil in Ukraine. The group has its own crushing oil factory, refined oil plant, canned assembly line, 100% of all products are exported, and the products are sold in the United States, France, Poland, Spain, Israel, Dubai, Malta, Angola, Palestine, Singapore, China, etc. Countries. The star brand VAZA.

Prince P.M. Trubetskyi Winery

8.1C4-06

Address: 乌克兰 Ukraine Kherson region-3, Svyrydova str, Vesele village, Bereslav district
Tel: +380442545324
Email: shkarnikov.a@vina-trubetskogo.com.ua
Web: www.vina-trubetskogo.com.ua

Prince P.M. Trubetskyi Winery uses exclusively own grapes to produce wine. Trubetskyi's vineyards are scattered across 200 ha of the Dnieper hills in Kherson region. The main varieties of vineyards: Cabernet Sauvignon, Merlot, Pinot Noir, Chardonnay, Riesling, Sauvignon Blanc, Aligote. All rootings are imported from Italy and France.

DIVOLY FOODS LLC

8.1C4-07

Address: 乌克兰 Ukraine Kyiv Oblast-Gostomel-#6 Buchanske highway
Tel: +862156411171 / +380443319363
Email: mt@divolyfoods.com
sales@divolyfoods.com
Web: www.divolyfoods.com

Production and trading enterprise in the segment of agricultural products, which includes supply of crude sunflower oil, bottled sunflower oil, etc. Entered Chinese market since 2015 year under TM "Divoly Foods", "Divoly". We offer bottled sunflower oil under it's own brands, Private labels, flexitank (crude oil, refined oil).

柬埔寨粮食集团 / CAM-GRAIN GROUP CO. LTD

8.1C4-08

Address: 柬埔寨 Cambodia Khan Russey Keo-Sangkat Kilometer 6-NO.G35,Borey Villa Toul Sangke
Tel: 86+15989368295
Email: 329583337@qq.com
Web:

柬埔寨粮食集团有限公司主要以是一家集生产，加工，出口柬埔寨优质米种产品为主的柬埔寨大米企业。深圳市中农粮食有限公司作为柬埔寨粮食中国经销商，精萃国内稀有品种，严控大米品质，相关“柬埔寨香米”及“柬埔寨茉莉香米”系列更是得到同行及顾客们的诸多赞许！

Cambodian Food Group Co., Ltd. is mainly a Cambodian rice enterprise which produces, processes and exports Cambodian high-quality rice products.

Pacific Sunrise International Corp

8.1C4-09

Address: 美国 United States of America WA-Mercer Island-2448 76th Ave. SE, Suite 222
Tel: 12062750388
Email: jay-na@att.net
Web:

We are an import-export company registered in the State of Washington. We were founded in 1997 and have been specializing in seafood, Washington wine, and health supplements. We are headquartered in Mercer Island, Seattle, Washington State, USA.

Groupe Bra D 'entreposage Frigorifique

8.1C5-01(02)

Address: 突尼斯 Tunisia Bizerte-Bizerte-Croisement Aousja EL Alïa
Tel: 0021672403111
Email: g.bra@planet.tn
Web:

Factory of processing and conditioning of dates.

Interprofessional Group of Fishing Products - GIPP

8.1C5-01(03)

Address: 突尼斯 Tunisia TUNIS-TUNIS-37, Niger Street
Tel: 0021671905876
Email: soniazouarigipg@gmail.com
Web: www.gipp.tn

GIPP is a public economic establishment endowed with public liability. Our main mission are to: - Ensure the link between different phases of production - Facilitate consultation and dialogue between professionals and administration - Contribute on market's equilibrium - Participate to the export promotion of Fishing Products - Set up data bases and elaborate studies about the fishing sector.

HORIZON INTERNATIONAL TRADING COMPANY - H.I.T COM

8.1C5-01(04)

Address: 突尼斯 Tunisia TUNIS-LAOUINA-CITE LA MEDINE, RUE DES EGLANTIERS N° 9
Tel: 0021621724118
Email: hitcomtunisia@gmail.com
Web:

H.I.T COM is an international trading company specialized in agri-food products (olive oil - organic vinegear - dates - redpomegranates - traditional cakes,...

HORCHANI DATTES

8.1C5-01(05)

Address: 突尼斯 Tunisia TUNIS-11 BIS RUE LABID
Tel: 0021671238283
Email: samir.horchani@horchani-dattes.com
Web: www.horchani-dattes.com

The company's successful history comes from a commitment to satisfy customer' needs with a willingness to change and adapt. Today, our Company is leader in processing and exporting high-quality fresh and dried dates. It is certified ISO 9001, ISO22000 , IFS, BRC, GLOBALGAP, and KOSHER.Our organic certifications for 'Deglet Nour' and 'Allig': "ECOCERT", "BIO SUISSE" and "NOP" (for US market).

INTERNATIONAL TRADING HOUSE - ITH

8.1C5-01(06)

Address: 突尼斯 Tunisia SOUSSE-AVENUE YASSER ARAFT IMMEUBLE MAHDI Bur N° 404
Tel: 0021673369399
Email: contact@ith-co.com
Web: www.ith-co.com

We are a company specialized in international trade for food products. Currently we carry our own labels for various food products Olive oil / Olives / Dates / Canned Tuna. A part of our activities iS implanting food-processing plants in different parts of the world. As well as creating private labels for various products.

KENZA FRUITS

8.1C5-01(07)

Address: 突尼斯 Tunisia SIDI BOUZID-OULED AHMED REGUEB
Tel: 0021623605000
Email: contact@kenza-fruits.com
Web: www.kenzafruits.com/en

Kenza Fruits aims to play a leading role in supplying first-rate products, providing first-class service and developing the most efficient and sustainable fresh produce solutions, in close cooperation with its customers and suppliers. Where Quality & Tradition meet excellence and taste, we say Kneiza the Tunisian brand of extra virgin and organic olive oil.

PACKTEC - TUNISIAN OLIVE OIL

8.1C5-01(08)

Address: 突尼斯 Tunisia TUNIS-CITE EL KHADHRA-RUE FERDJANI BELHADJ AMMAR
Tel: 0021671772755
Email: dg@packtec.tn
Web: www.tunisia-oliveoil.com

Packtec ensures the management of the program of promotion of olive oil whose aim is to improve, strengthen the image of Tunisia as an olive oil producing country, and to encourage Tunisian olive oil companies to export packaged olive oil Its main activities are: - Helping companies to access and develop in foreign markets - Reinforcing Tunisia's image as a major olive oil producing country.

SLAMA HUILES

8.1C5-01(09)

Address: 突尼斯 Tunisia TUNIS-MANOUBA-14 Rue de Tissage, ZI Ksar Said
Tel: 0021671546620
Email: dhouha.chtourou@carthageoliveoil.com.tn
Web: www.oleiva.com.tn

SLAMA HUILES was incorporated in 2005 but has its origin from SLAMA FRERES in 1972. • It's a story of a family that managed to transform the passion for the healthy Mediterranean tradition and the expertise in the Olive Groves, through harvesting, pressing and bottling into a prestigious olive oil brand name. Our main certifications are: FSSC 22000; Halal; Kosher and FDA Registration.

Société Agro Export Sahel "SAGES"

8.1C5-01(10)

Address: 突尼斯 Tunisia Nabeul-Grombelia-Zone industrielle route de Béni Khalled BP.239 -
Tel: 0021672214775
Email: sages@planet.tn
Web: www.sages-tunisie.com

We export fruit and vegetables,mainly multiple varieties of Tunisian dates (Deglet Nour, Allig, Khouat Allig and Kenta).Our company is equipped with modern and hygienic material. It has a team with expertise in the packaging of dates in accordance with international standards. Our company is certified 'ISO22000' and 'Halal'.

STCA AL JAZIRA

8.1C5-01(11)

Address: 突尼斯 Tunisia TUNIS-MORNAG-INDUSTRIAL ZONE MORNAG
Tel: 0021679350170
Email: aljazira.oil@gnet.tn
Web: www.oiiveoiitunisia.com

We are producers of high-quality olive oil and 100% natural vinegar. We export to Dubai, Egypt, Malaysia, KSA, Brazil, Oman, China either as "AL JAZIRA" or as a PRIVATE LABEL We export both in bulk and packaged olive oil. We supply high-quality organic extra virgin olive oil (Certified by ECOCERT, BIO JAS) and infused organic extra virgin olive oil inin six flavors.

TUNISIA EXPORT - CEPEX

8.1C5-01(12)

Address: 突尼斯 Tunisia TUNIS-CENTE URBAIN NORD-MAISON DE L'EXPORTATEUR
Tel: 0021671130320
Email: rapidcontact@tunisiaexport.tn
Web: www.tunisiaexport.tn

Tunisia Export - CEPEX is a governmental export promotion agency. Our main missions are: - to promote tunisian products and services to international markets - to inform, advice and guide tunisian exporters about business opportunities - to support exporting companies to international markets through the organisation of promotional events, partnership meetings and market prospecting.

AUSINO PACIFIC PTY LTD

8.1C5-02

Address: 澳大利亚 Australia QLD-CCT Calamvale-75 Alfred
Tel: 18642537553
Email: sylvia@unibloom.com.cn
Web: www.unibloom.com.cn

Ausino Pacific is a trading company to provide streamlined sourcing of the highest quality beef and lamb globally. The sourcing aim for one of the largest Chinese red meat company, SSC Group combined the purchasing departments of seven businesses into one specialist business based in Brisbane, Australia.

Hsu's Ginseng Enterprises, Inc.

8.1C5-03

Address: 美国 Wisconsin-Wausau-237895 County Road W United States of America WI-Wausau-237895 County Road W
Tel: 7156752325
Email: arthur@hsuginseng.com
Web: www.hsuginseng.com hsu'sginsengenterprises,inc.

成立於1974年，位於威斯康辛州沃沙市的许氏参业集团，不仅是美加首家华人种植花旗参农，其辖下拥有超过一千英亩处女地，为全美数家专业专职有规模种植花旗参之花旗参农场,创业来以自产自销、农场直营的「产销一条龙」的方式，自种植、筛选、分级到製造全过程，种植腹地及GMP规模均立於产业的领导地位，分公司遍佈美、亚板块，坚持著「货源纯正、价廉物美、顾客至上、服务到家」的经营原则。
Hsu's Ginseng owns and operates one of the largest American Ginseng farms in Marathon County, Wisconsin USA. Hsu's has been growing quality American Ginseng for over 40 years. The corporation was founded in 1974 as a mail order business and has since become an international enterprises.

Anderson Northwest LLC

8.1C5-04

Address: 美国 United States of America WA-Valleyford-PO Box 391
Tel: 1-208-413-9250
Email: mike@andersonnorthwest.com
Web: www.andersonnorthwest.com

Anderson Northwest is a family owned and operated company, founded in 2003. We specialize in originating bulk pulses (dry peas and lentils) and specialty crops directly from the farm for trade and export internationally. We also have our own healthy snack brand, 13 Foods, with nuts, pulses, and dried fruit. 13 Foods is distributed in USA retail market and now being introduced to the China market.

Usorce LLC

8.1C5-05

Address: 美国 United States of America WA-Redmond-17371 NE 67TH CT STE A7
Tel: 4255222668
Email: service@usorce.com
Web: usorcellc

USorce's mission is to utilize natural herbs and supplements and the promise of modern science to deliver wellness and healing to our customers. Our aim is to let you overcome your pain and maintain good health without the side effects of pharmaceuticals. Combining our supplements and herbs with a healthy lifestyle is a great way to build the healthiest version of you.

Brivais vilnis

8.1C5-06

Address: 拉脱维亚 Latvia Salacgriva-Ostas 1
Tel: +37164000210
Email: janis.savics@brivaisvilnis.lv
Web: www.brivaisvilnis.lv

JSC Brivais vilnis is one of the largest canned fish producers in the Baltic states with 70 years of experience. We can guarantee the best quality and taste for different type of consumers. Company produces more than 100 different type of products from Sprats, Baltic Herring, Atlantic Herring, Mackerel, Sardines and Salmon. Our products are ready to use and have 2-3 years of shelf life.

Banga Ltd

8.1C5-07

Address: 拉脱维亚 Latvia Roja-Akas Street 74B,
Tel: +37122001498
Email: ansis@balticfishgroup.com
Web: www.banga-seafood.com

Canned seafood producers from Latvia.

MILZU!

8.1C5-08

Address: 拉脱维亚 Latvia KULDIGA-RUMBA-MIKELI, Rumba parish, Kuldiga region
Tel: +37122336868
Email: evita.strausa@milzu.lv
Web: www.milzulv

MILZU! offers healthy alternative for breakfast cereal and snacks from rye. Products provide high nutrition and contains only natural ingredients. MILZU! concept are made accordingly to trends and needs of consumers for valuable and tasty products with less sugar.

Apricot&Company

8.1C6-02

Address: 塔吉克斯坦 Tajikistan dushanbe-dushanbe-100 str. Somoni Tajikistan Asht
Tel: +992918880555
Email: apricot-export@mail.ru
Web:

Apricot & Company registered in Tajikistan, mainly engaged in the trade of agricultural products such arpicot, dried fruits.

SWLL Korvoni Asr

8.1C6-05

Address: 塔吉克斯坦 Tajikistan Gissar-Gissar-Gissar
Tel: +992937163888
Email: wangyajie4517@gmail.com
Web:

Swll Korvoni Asr registered in Tajikistan in 2010 and mainly engaged in the trade of agricultural products as honey and cherries.

塔吉克斯坦中亚公司 / LLC "Osiyoi Miyona"

8.1C6-07

Address: 塔吉克斯坦 杜尚别-杜尚别-塔吉克斯坦杜尚别普罗迪大街18号 Tajikistan Dushanbe-Dushanbe-18 Produbе Prodi Street, Tajikistan
Tel: +992 937765568
Email: 115164032@qq.com
Web:

塔吉克斯坦中亚公司致力于塔吉克斯坦农产品领域（车厘子、柠檬、干果）等的种植、收购、加工、进出口贸易等。
Tajikistan Central Asia Company is committed to the cultivation, acquisition, processing, import and export trade of Tajikistan's agricultural products (cherries, lemons, dried fruits), etc.

LLC "MERIH"

8.1C6-08

Address: 塔吉克斯坦 Tajikistan Republic Tajikistan,Hisor district,Khonako village
Tel: 927832661
Email: 632010027@qq.com
Web:

The purpose of the company, let the motherland of goods to the world.

JSI Holdings B.V.

8.1C6-09

Address: 荷兰 Netherlands Zuid-Holland-The Hague-De Werf 11
Tel: +31(0)708209195
Email: mandy.chen@jsiholdings.com
Web:

Since its inception in the Netherlands, JSI Holdings B.V. has invested in the construction and operation of GIA Trade and Exhibition Center (GIA), which provides Sino-Europe enterprises a two-way cooperation platform for international trade and business. JSI's main business are International conference and exhibition services, One-stop business centre and Cross-border E-commerce Service Platform.

"Parizhskaya Kommuna XXI" LLP

8.1C6-10

Address: 哈萨克斯坦 Kazakhstan Aktobe Region-Aktobe-Sankibay batyr str. 139
Tel: +77132742222
Email: gaykua@gmail.com
Web:

The company was established in 2006. "Parizhskaya Kommuna XXI" annually produces 9000 tons of pork meat of the best quality as well as over 50 types of meat products like sausages, canned pork and other delicacies.

HOLMES PRODUCTION LIMITED

8.1C6-11

Address: 尼日利亚 Nigeria LAGOS-OKOTA-12 EMMANUEL STREET, OFF OKOTA ROAD
Tel: 08060078771
Email: chikly1960@gmail.com
Web:

WE ARE A LEADING AGRICULTURE PRODUCTS MANUFACTURING AND PROCESSING COMPANY BASED IN LAGOS NIGERIA.

JOSH METRO INTEGRATED RESOURCES LTD

8.1C6-12

Address: 尼日利亚 Nigeria OYO-IBADAN-OLUYOLE INDUSTRIAL ESTATE
Tel: 07062190939
Email: diamondplus2010@yahoo.com
Web: www.joshmetroltd.com

We are a fast rising construction, agriculture and general business oriented organization with our primary focus on Agricultural Engineering planning, designing and development projects alongside our products and services which is our major contributions to the development sector of the economy.

tannourine roastery

8.1C6-13

Address: 黎巴嫩 Lebanon batroun-tannourine-tannourine -Lebanon
Tel: +96171847172
Email: charbel-gebrael@hotmail.com
Web:

our company is specialized in roasting and packaging of nuts.

Beauty & Healthy SARL - Khan Al Saboun

8.1C6-16

Address: 黎巴嫩 Lebanon -- Select --- tripoli-dahr, 3ein
Tel: 00961 6416648
Email: sales.khanalsaboun@gmail.com
Web: www.khanalsaboun.net

Here at Khan Al Saboun we produce more than 600 kind of edible products such as herbal soaps, shower gel, body lotion,skin care creams all are based of virgin olive oil edible herbs & essential oils.

Orchards of Laila

8.1C6-17

Address: 黎巴嫩 Lebanon El Chouf-Baassir-Hassan Bek Al Kaakour Main Road
Tel: 00967923322 / 009617923322
Email: ikaakour@lebgenco.com
Web: www.lebgenco.com

Our company deals with organic products including olive oil, olives, honey, carob molasses, and olive oil based cosmetics such as soap, shampoo, body wash... under the luxury organic brand "Orchards of Laila" and our mainstream brand "Elissar".

sonaco sarl

8.1C6-18(01)

Address: 黎巴嫩 Lebanon Lebanon-Amchit-gherfine mainroad-Amchit
Tel: 9619623777
Email: sonaco@alrabih.com.lb
Web: alrabih.com.lb

Sonaco s.a.r.l was established in 1975 in Gherfine -Lebanon. We have a large category of food and beverages products diffused around the world as: Tahini, halawa, dips, canned beans & peas & vegetables, cereals, dried beans, oil, olives, pickles, pastes and sauces, ketchup, molasses, Substitutes, desserts, jams, blossom & rose water, syrups and Mediterranean food specialties.

Agence Nationale pour la Promotion des Investissements (ANAPI)

8.1C6-20

Address: 刚果（金）Congo(Kinshasa) Kinshasa-Kinshasa-Croisement de l'Avenue du Premier Mall et du Blvd du 30 Juin n° 33 C
Tel: 0998180687
Email: anthonynkinzo@gmail.com
Web: www.investindrc.com

Public institution in charge of investment promotion, under the supervision of the Minister of Planning. The single point of contact for guidance on laws, policies, incentives, investment climate and trends, investment opportunities including privatization, costs of setting up a business, process for finding land and sector specific information.

Chambre de commerce et d'Industrie

8.1C6-23

Address: 尼日尔 Niger Niamey-Niamey-BP.209
Tel: 0227 20732210
Email: ccaianiger@yahoo.fr
Web:

Niger chamber of Commerce and Industry has a national wide cover. It works towards the enterprises development and the economic growth.. As the main support structure to the private sector, it plays role between the public authorities and the private sector. Its actions are oriented towards six major lines : -The representation of the interests of the business world ; -The sensitization and info.

Silk Road Commerce and Consulting "SRCC"

8.1C7-02

Address: 黎巴嫩 Lebanon Beirut-Beirut-Badaro Area
Tel: 009611391393
Email: zaher@silkroadcc.com
Web:

Silk Road Commerce and Consulting "SRCC" is a Lebanese company established on 2011 with a Registration number 2023547, with offices in Beirut, Dubai and China. Our maim activities are to facilitate the entry of the Lebanese business to Chinese market and vise versa.

Alfa Interfood SAL

8.1C7-03

Address: 黎巴嫩 Lebanon BEIRUT-MOUAWAD STREET NAHLE BLDG 5TH FLOOR
Tel: +9611549550
Email: nadia.h@zjharb.com
Web: www.alfainterfood.com

Alfa Interfood S.A.L. is a Middle Eastern Company / Factory located in the heart of the Lebanese Bekaa Valley. This brand company has been founded in 1992 with newly established equipments & manufacturing over 300 SKU's under the brands: Chtoura Garden, Ctoura Foods, Maxi Foods & Chtoura Land.

Khan El Kaser - Olivco

8.1C7-04

Address: 黎巴嫩 Lebanon Mount Lebanon-Baakline-Baakline - building 480
Tel: 00961 5306035
Email: makram@olivcosarl.com
Web: www.kko.com.co

The story started in 1961 when the family took the step to establish an olive oil factory, where the new generation took it to a new level establishing a soap & cosmetics factory, a line of products to fit into the market and exceed the expectations in how a product would add value to your day, we are present to share the beauty of our village in your city, your satisfaction is our start line.

Château Ksara

8.1C7-05

Address: 黎巴嫩 Lebanon Beirut-Charles Malek Avenue
Tel: 009611488054
Email: emaamari@ksara.com.lb
Web: www.chateauksara.com

Château Ksara, the country's oldest winery, began life in 1857 when Jesuit Fathers inherited the estate and began farming a 27-hectare plot of land to produce Lebanon's first non-sweet red wine. In doing so, they laid the foundations of Lebanon's modern wine industry. Today, Château Ksara produces 3 million bottles per year and export 50% of its production to 42 countries.

Rafic Marrouche Restaurants Co.

8.1C7-07

Address: 黎巴嫩 Lebanon Beirut-Beirut-Phoenicia Pharmacy Complex, Ground Floor, Minet El Hosn (Facing Phoenicia Hotel)
Tel: +9613387420
Email: info@marroucherestaurants.com
Web: www.marroucherestaurants.com

The MARROUCHE "secret" middle-eastern recipes have been around since the 1920s and are famous all-over the Middle East for being of exquisite taste, flavor, and aroma. Our MIXES are HALAL certified, free from RESERVATIVES, COLORINGS, MSG, made of premium quality crushed ingredients, condiments & spices.

African Caribbean Food Industry (ACFI FOOD)

8.1C7-14(04)

Address: 苏里南 Wanica-Indira Ghandiweg 793 c Suriname Wanica-Indira Ghandi road 793c
Tel: 5978566547
Email: Acfifood@hotmail.com
Web: 380674602554239225.weebly.com

seafood company.

SURINAME CANDIED FRUITS N.V

8.1C7-14(11)

Address: 苏里南 Saramacca -Selly Donkweg 8 Suriname Saramacca -Selly Donk road 8
Tel: 597326526
Email: crsouverein@gmail.com
Web: www.surinamecandiedfruits.com

Bio pineapple and manufacturer of candied fruits Manufacturer of Bio pineapple, candied fruits, syrups, acai berries.

soRena's Winery NV

8.1C7-14(13)

Address: 苏里南 Suriname Paramaribo-Djerostreet 2
Tel: 597559030
Email: info@sorenasgroup.com
Web:

The winery produces tropical wines from fruits, vegetables, spices and roots.

Rising Sun Winery NV

8.1C7-14(14)

Address: 苏里南 Paramaribo-Noahweg 12 Suriname Paramaribo-Noah road 12
Tel: 5978688695/
Email: Risingsunwinery@gmail.com
Web:

wine maker. Wines from tropical and exotic fruits.

Carifruits NV

8.1C7-14(16)

Address: 苏里南 Suriname Wanica-Leiding 9a Br 34
Tel: 597338293
Email: a.troenodrono@carifruits.com
Web:

Manufacturer of juices.

Tropical Trade and Industries

8.1C7-14(19)

Address: 苏里南 Paramaribo-Aboenawrokostraat 55 Suriname Paramaribo-Aboenawrokostreet 55
Tel: 5978503878 / 597458666
Email: rahied.doekhie@tropicalgroupnv.com
Web: www.tropicalgroupnv.com

Manufacturer of syrups, essences and pharmaceutical products.

van Gom Industries

8.1C7-14(20)

Address: 苏里南 Wanica-Kronenburgweg 163 Suriname Wanica-Kronenburg road 163
Tel: 597499940
Email: info@sishado.com
Web: www.sishado.com

Manufacturer of sauces and marinades.

Moestan's tea herbs

8.1C7-14(22)

Address: 苏里南 Suriname Wanica-Welgedacht A
Tel: 5977468670
Email: santaris.ss@hotmail.com
Web:

Manufacturer of herbal tea.

NV Interfood

8.1C7-14(23)

Address: 苏里南 Taut Lui Fautweg 112 Suriname Taut Lui Faut road 112
Tel: 597366400 / 5970366400
Email: info@nvinterfood.com
Web: www.nvinterfood.com

Manufacturer of ketchup, pickled fruits and vegetables, vinegar, marmalade.

Clevia Park

8.1C7-14(24)

Address: 苏里南 Suriname Paramaribo-Corner of Kasudjie road / Papajafowroestreet
Tel: 597556550
Email: kristinadewi.legiman@mdc.sr
Web: cleviaparksuriname

natural products and health of mind, body and spirit.

TACOBA FORESTRY CONSULTANT NV

8.1C7-14(25)

Address: 苏里南 Suriname Paramaribo-Metaalstreet 16
Tel: 597401485
Email: 1738418936@qq.com
Web:

Manufacturer of wood and wood products like furniture etc. consulting firm in different areas.

NV Amea Cashew Industries

8.1C7-14(26)

Address: 苏里南 Suriname Brokopondo-Afobakka road Phedra
Tel: 5978964295
Email: info@ameapineapple.com
Web:

cultivation and processing of pineapple. Agriculture.

Fernandes bottling company NV

8.1C7-14(27)

Address: 苏里南 Suriname Paramaribo-Indira Gandhi road 12
Tel: 597482121
Email: fbc.consumentenservice@fernandes.sr
Web: fernandesbottling.com

Manufacturer of soft drinks and other beverages.

Willemsburg NV

8.1C7-14(28)

Address: 苏里南 Paramaribo-Emmastraat 1 Suriname Paramaribo-Emmastreet 1
Tel: 597402305
Email: info@willemsberg.com
Web: www.wippypindakaas.com

Manufacturer of peanut butter.

Bosroko Group / Finger Food

8.1C7-14(29)

Address: 苏里南 Suriname Paramaribo-Washingtonstreet 43
Tel: 5978507313
Email: jason@bosroko.com
Web:

Agribusiness Bosroko Group Agribusiness.

Grassalco NV

8.1C7-14(30)

Address: 苏里南 Suriname Paramaribo-Sir Winston Churchill road 3
Tel: 597482727
Email: contact@grassalco.com
Web: grassalco.com

Manufacturer of crushed stone. InVitroPlants production of in vitro (tissue culture) propagated plant material.

NV VSH Foods

8.1C7-14(31)

Address: 苏里南 Suriname Wanica-Indira Gandhiweg 157
Tel: 597482600 ext.428
Email: kwongafoe@vshunited.com
Web: www.vshfoods.com

Manufacturer of butter and margarine.

Bera Fisheries NV

8.1C7-14(32)

Address: 苏里南 Suriname Paramaribo-Stivi road 28
Tel: 597481594
Email: info@berafish.com
Web:

Manufacturer of seafood.

Sweetie Coffee NV

8.1C7-14(33)

Address: 苏里南 Paramaribo-Portugalstraat 6 Suriname Paramaribo-Portugalstreet 6
Tel: 5978802834
Email: info@sweetiecoffee.com
Web:

artisanal coffee roaster.

Future Beverages NV

8.1C7-14(34)

Address: 苏里南 Para-Wi sa Wini Suriname Para-Wi sa Wini roadway
Tel: 597451000
Email: dimi@dtssur.com
Web: basic-one-drinks.com/company.html

Manufacturer of bottled spring water.

Rijstpak NV

8.1C7-14(35)

Address: 苏里南 Suriname Paramaribo-Lala Rookh road 34
Tel: 597491266
Email: rijstpak@sr.net
Web: rijstpak.com

Manufacturer of rice and rice products.

GARIBSONS (PVT) LTD

8.1C7-15

Address: 巴基斯坦 C-69/71, 12th Commercial St.,Phase II Ext., DHA, Karachi-75500 Pakistan C-69/71, 12th Commercial St.,Phase II Ext., DHA, Karachi-75500, Pakistan.
Tel: 18616515335 / 008618616515335
Email: 2862325612@qq.com
Web:

嘉瑞森有限公司是一家成立于1976年的家族企业。该公司具有ISO9001：2000 / HACCP&BRC认证，其IFS（国际食品标准）认证正在申请过程中。截至2018年，嘉瑞森公司传承三代，在执行管理、监督以及业务发展运营中取得卓越成就。

Garibsons (Pvt.) Ltd., is a family-owned business established in 1976. The company is an ISO 9001:2000/ HACCP & BRC certified company and its IFS (International Foods Standards) certification is in progress. As of 2018, Garibsons takes pride in having three generations of the family be part of the executive management, supervising and growing operations for its business.

Marhaba Laboratories (Pvt.) Ltd.

8.1C7-16

Address: 巴基斯坦 Pakistan Punjab-Lahore-142-Quaid-e-Azam Industrial Estate,
Tel: 0092-42-111 152 152
Email: export@marhaba.com.pk
Web: www.marhaba.com.pk

Marhaba is one of the largest phytoceutical companies engaged in research, development, production and marketing of Health Food Products, Herbal Cosmetics, Herbal Remedies and many other OTC products.
Marhaba has a perfect GMP, Quality Assurance and Quality Management System to meet the customer satisfaction, National & International standards.

DEGENIJA D.O.O.

8.1C7-17

Address: 克罗地亚 Croatia Krasno -Krasno 19A
Tel: +385997544007
Email: zdenkaa0604@gmail.com
Web: alcohol-degenija.com

We are family company Degenija d.o.o. from the Republic of Croatia. We are producing strong alcoholic spirits (herbal liqueurs) such: Travarica, Pelinkovac, Amaro, Kruškovac, Orahovac, Cherry Brandy, Medica, and Vila Velebita.

M.N.T Company Limited (Spring Corner Farm) / M.N.T Company Limited (Spring Corner Farm) and Myanmar Honey Food Factory

8.1C7-21

Address: 缅甸 Myanmar Yangon-Yangon-11, Kabar Aye Pagoda Road
Tel: 951507048 / 951507048
Email: Sandra@newklink.com
Web: www.facebook.com/springcornermyanmar

we choose to become farmers in Myanmar because we want to challenge our future to live more happy, healthy and earthy. Now a day we cannot differentiate quality of life from normal humble life compare with materialistic life. On the aged of 40th I realized that quantity of life mean eat none process foods, naturally grown vegetables and all healthy mean life healthy will be better than others.

Ministère du Commerce et de l'Industrie (Ministry of Trade and Industry)

8.1C7-25

Address: 中非 Central African Republic OMBELLA-MPOKO-Bangui-Building Administratif, Avenue Barthélemy Boganda
Tel: +236 72629960
Email: oliviermahoko6@gmail.com
Web:

The Ministry of Industry and Commerce is the competent authority of the Central African Republic for foreign trade. Its main functions are to supervise both domestic trade and foreign trade, SME (middle and small-sized enterprise) registration, to review merchant qualifications and issue merchant certificates, and to guide business interaction and IPR (intellectual property protection).

CHAMBER OF COMMERCE AND INDUSTRY OF BURKINA FASO

8.1C7-33

Address: 布基纳法索 Burkina Faso OUAGADOUGOU-1, Avenue de Lyon
Tel: +22625306114 / +226 25 30 61 14
Email: pegnani.ouarma@cci.bf
Web: www.info@cci.bf www.cci.bf

The Chamber of Commerce and Industry is the largest representative organization of companies in Burkina Faso. It provides consultancy, capacity building and business promotion services to Burkina Faso companies. It facilitates the linking of business between Burkina Faso companies and foreign companies through the organization of business trips and the hosting of business delegations.

Ramciel Multi-Purpose Cooperative Society

8.1C7-34

Address: 南苏丹 South Sudan Juba- Plot No. 379 South K, 1st Class, Thongping
Tel: +211927324323
Email: soco4323@gmail.com
Web:

Ramcial is a South Sudan Company which is mainly exporting agriculture products such as gum abrbic, maize, sorghum, sesame, honey, etc.

Ecobee African Natural Products LTD

8.1C7-35

Address: 赞比亚 Zambia Lusaka-371A of subdivision 2, Ngwerere Rd, Lusaka, Zambia
Tel: +27836260061
Email: mandy@eternityfs.co.za
Web: www.ecobeeafrica.com

Ecobee African Natual Products LTD was born out of a growing consern for Africa's natural vegitation, wildlife and the world wide decline in Bee colony numbers. We aim to Provide the world with 100% natural, healthy honey, while creating awairness and funding for Nature conservation initiatives.

Comve Unipesoal LDA / Chamber of Commerce and Industry of Timor-Leste

8.1C7-36

Address: 东帝汶 Dili-Comoro-Ave Luro mata Timor Leste-Dili-Rua 30de agosto-no.06 acait
Tel: +67077250187 / +67077336000
Email: brigida_crr@yahoo.com kathleen_f_goncalves@Hotmail.com
Web: www.cci.org

公司成立于2011，经营农产品 、手工艺品以及养鸡场。公司参加过多次印尼举办的展览会。

Founded in 2006, the company organizes various industries to conduct business activities and government docking to protect industry rights and interests.

TOGO / TOGOLESE CENTER OF EXHIBITION AND FAIR OF LOME

8.1C8-04

Address: 多哥 MARITIME-LOME -ATTIEGOU, BP 10056 Togo MARITIME-LOME -CETEF-LOME 'TOGO 2000 POBOX 10056
Tel: 0022890041553 / 0022890121394
Email: niquak@yahoo.fr
Web: www.cetef.tg

Promotion of Economic Activities' operators in Togo.

DIONGOMA SUARL

8.1C8-05

Address: 塞内加尔 Senegal THIES-MBOUR-THIES
Tel: 00221339577700
Email: mariamasylla43@hotmail.com
Web: www.diongoma.com

Diongoma is a company created in 2007 by Mariama Sylla. Her taste for fashion, decoration and love of her country lead her to African festivals and markets where she sells mostly jewelery and fashion accessories. Little by little, the desire comes to him to make known and market Senegalese traditional well-being products, and she begins to sell shea butter and hibiscus flower, which is called bis.

Liberian Business Association (LIBA)

8.1C8-06

Address: 利比里亚 Montserrado County-Paynesville-A.B. Tolbert Road, Paynesville, Liberia Liberia Montserrado County-Paynesville-A.B. Tolbert Road
Tel: +231886811029
Email: libaliberia@yahoo.com
Web: www.liba.org

The Liberian Business Association (LIBA) was established in 1993 by an Act of the National Legislature of Liberia and incorporated in 2002 with legal authority to advocate for all Liberian-Owned registered businesses with the public sector and develop appropriate programs and activities to grow the domestic private sector.

UGANDA EXPORT PROMOTION BOARD

8.1C8-08

Address: 乌干达 Uganda Kampala-2nd Floor, UEDCL Towers, Nakasero Road
Tel: +256414230250
Email: info@ugandaexports.go.ug
Web: www.ugandaexports.go.ug

Uganda Export Promotion Board (UEPB) is a public Trade Promotion Organization, established by in 1996 by Government to coordinate the development and promotion of Uganda's exports. UEPB is an agency of the Ministry of Trade, Industry and Cooperatives. UEPB comes to CIIE on behalf of the export community in Uganda.

LA GUINEENNE DES TERROIRS / MINISTRY IN CHARGE OF INVESTMENTS AND PUBLIC-PRIVATE PARTERNERSHIPS

8.1C8-09

Address: 几内亚 Guinea CONAKRY-CONAKRY-CONAKRY
Tel: 622489934
Email: souleymanesysavane@gmail.com
Web:

"La Guinéenne des Terroirs", the first concept of social solidarity economy in Guinea, is an added value of the community grants program, under funding from the New Field Foundation. Created in 2012, it is the trigger for the sustainable development of the rural economy and the convergence framework of the products of rural women's groups for agriculture, food sovereignty and social development.

Ethiopian Coffee Exporters Association

8.1C8-11

Address: 埃塞俄比亚 Ethiopia Addis Ababa-Addis Ababa-Ethio-China Friendship Street, Medina Tower 6th floor
Tel: +251114664667
Email: eceaoffice@gmail.com
Web: www.eceaoffice.com

Is a member of international coffee association (SCA, SCAJ, SCAE And AFCA) Coordinate coffee exporters aimed at securing the utmost benefit by increasing both the quality and quantity of coffee export.

Ethiopian Pulses, Oilseeds and Spices Processors Exporters Association

8.1C8-12

Address: 埃塞俄比亚 Ethiopia Addis Ababa-Addis Ababa-Yeka Subcity, Hayahulet Mazorya
Tel: 00251116623545
Email: epospea@gmail.com
Web: www.epospeaeth.org

Ethiopian Pulses, Oilseeds and Spices Processors-Exporters Association (EPOSPEA), is a sectoral Association established as per proclamation No.321/2003 to promote and safeguard the interests of its members.

GASHORA FARM LTD

8.1C8-14(01)

Address: 卢旺达 Rwanda KIGALI-P.O BOX 881
Tel: +250788793329
Email: twahirwadiego@gmail.com
Web:

Gashora farm Ltd is a company that produces and chilli and chilli products in Rwanda. It has contracts with 1000+ farmers who farm chilli for the company to export.Grade 1 chilli is exported to international market while Gashora adds value on grade 2 chilli and produces chilli products such as chilli oil, sauce in paprika and pineapple flavour, paste & powder.

Rwanda Mountain Tea Ltd

8.1C8-14(02)

Address: 卢旺达 Rwanda Kigali-Kigali-Avenue des poids lourds Petrocom Building
Tel: 0788313901
Email: bnyirahuku@rwandamountaintea.com
Web: www.rwandamountaintea.com

Gambia Investment Export Promotion Agency

8.1C8-19

Address: 冈比亚 Gambia Serrekunda-Banjul-Giepa House Kairaba Avenue
Tel: +220 3522445
Email: hmbjallow@giepa.gm
Web:

GIEPA is the national agency responsible for promoting and facilitating Investment, Business and Export Development and Support to MSMEs and regulation of designated export processing zones in The Gambia.

Garden Fresh Ltd

8.1C8-14(03)

Address: 卢旺达 Rwanda Kigali -Kigali
Tel: +250788303641
Email: aimable.gakirage@gardenfreshrwanda.com
Web: www.gardenfreshrwanda.com

GARDEN FRESH Ltd is a Rwandan company whose mission is to provide high quality vegetables and fruits for export in both EU Asian markets while improving income to smallholder's farmers working with the company. Additionally, Garden Fresh provides technical know-how to local professional out growers who produce selected vegetables for exports on a contractual terms.

West Hills Coffee Roasters

8.1C8-14(05)

Address: 卢旺达 Rwanda Kigali-kigali
Tel: +250788305174
Email: simeon@westhillscoffee.com
Web: www.westhillscoffee.com

Established in 2006, West Hills Coffee was created by Eng. Simeon Ngendahayo who entered into the world of coffee from inspiration by the long years of experience in Coffee Sector in Rwanda. Especially with PEARL project and SPREAD project which operated in Rwanda since 2001. They took their first initiative from their observations of routine operations of Rwanda small holders in coffee growing.

IFOAM / 正谷 / IFOAM / OABC

8.2A0-01(01)

Address: 德国 Germany Bonn-Charles-de-Gaulle Str. 5
Tel: 0086-17611578621
Email: yaoyunzhe@oabc.cc
Web: www.oabc.cc

IFOAM - Organics International is the organic agent of change for true sustainability in agriculture, value chains and consumption, working on behalf of its membership, the global organic movement in over 120 countries. Beijing Organic and Beyond Corp. is its global partner. It is the leading organic food brand in China with 1.1 million customers and good cooperation with superior global farms.

Sino-German Ecopark Handels- und Beratungs GmbH

8.2A0-01(03)

Address: 德国 Germany München-Max-Joseph-Strasse 5
Tel: 86（0）53286723567
Email: wangchenghao@sgugroup.com
Web:

Sino-German Ecopark Handels- und Beratungs GmbH engagiert sich in der wirtschaftlichen Zusammenarbeit, im Aufbau einer kulturellen Austauschsplattform, sowie in bilateralen Handels-und Beratungstaetigkeiten.

code-trading GmbH

8.2A0-01(04)

Address: 德国 Berlin-Berlin-Keithstr. 2-4 Germany Berlin-Berlin-Keithstr. 2-4, 10787
Tel: 0049-30220117820
Email: info@code-trading.de
Web: code-berlin.com/projects/waldulmer

code-trading GmbH, based in Berlin, has been supporting companies in trade exchange between China and Germany since 2012. We have been devoting ourselves in providing Chinese customers with the German products with excellent quality and high cost performance. Together with the German Waldulmer Wine Association from the South Bavaria, we bring various crafted high-end Pinot Noir to China.

Honour West Europe GmbH

8.2A0-01(05)

Address: 德国 Germany Deutschland-Frankfurt am Main-Olof-Palme-Strasse, 13
Tel: +491738529665
Email: andreas.g@honour-west-europe.de
Web: honourwesteuropegmbh

本公司从事欧洲大宗商品进出口贸易,主营农产品,食品,酒水等。
Our company is engaged in import and export of bulk commodities in Europe, mainly in the fields of agricultural products, food, alcohol drinks and so on.

WWT GmbH

8.2A0-01(06)

Address: 德国 Germany Nordrhein-Westfalen-Koeln-Antoniter Strasse 17
Tel: +49 221 28065538
Email: sam@schenkgroup.com
Web:

WWT is a company specializing in global food trade, based in Cologne, Germany. The main business areas are import and export trade of cosmetics, fresh produce and deep processing. Our fresh products include frozen pork, frozen chicken, frozen beef and mutton, frozen seafood, and high-grade fresh beef.

DUKA ENGINEERING & TRADING P.L.C

8.2A1-01(01)

Address: 埃塞俄比亚 Ethiopia Addis Abeba Ethiopis-ADDIS ABEBA. ETHIOPIA
Tel: (00)251118883284
Email: redfoxethio@gmail.com
Web: www.duka.com.et

s: - Export trade in agricultural raw materials, livestock, food, beverages and tobacco and tobacco products. The export item include specifically export of cereals, export of oil seeds, export of pulses and export of pepper & spices. The company aimed to export coffee starting from the coming period; Export Trade License No: - MT/AA/14/666/498568/2007 date issued 11/12/2007 E.C; Tin No. 002704621

Madsthane Lao Handicraft

8.2A1-01(02)

Address: 老挝 Laos Vientiane Capital-Chanthabouri-No.90, Unit.6 Phontong chommani
Tel: +85621561802
Email: may.xudalad@gmail.com madsthanne@gmail.com
Web:

Madsthanne is a fair trade company. Producing Lao Products from Tea for over 400 years. The products are made by ethnic people in their villages and the process and production are taken good care of.

GIRONES S.A

8.2A1-01(04)

Address: 哥伦比亚 Colombia SANTANDER-FORIDABLANCA-CR 9 28 E 93 LA CUMBRE
Tel: +57-037-6581348
Email: diana.b@girones.com.co
Web:

transformation and sale of cocoa based products, cacao beans- cocoa liquor- chocolate bar- cacao nibs- fondue coverture.

Mai Savanhlao

8.2A1-01(05)

Address: 老挝 Laos Vitiane-Hadxayfrong -Ban Salakham
Tel: +856 21 812 256
Email: tui.luangkhot@gmail.com
Web: www.sachainchilaos.com

Mai Savanh Lao is Fair Trade certified company in Laos producing high quality food products made from Sacha Inchi seeds, We do the processing with high quality machinery and guarantee best quality of products, service and delivery. We source our raw material from our own plantations and from our network of contract farmers.

Trueways Enterprises Ltd

8.2A1-01(06)

Address: 肯尼亚 Kenya Kenya-Nairobi-5607
Tel: +254733223916
Email: info@trueways.co.ke
Web: www.trueways.co.ke

Trueways is a Kenyan agribusiness enterprise in the honey and beeswax sector. We process acacia honey and manufacture natural beeswax products such as skin care, candles and crayons.

NYUMBANI COFFEE ENTERPRISE

8.2A1-01(07)

Address: 肯尼亚 Kenya NAIROBI-NAIROBI
Tel: +254711130973
Email: NYUMBANCOFFEE@GMAIL.COM
Web:

"As a company, we are dedicated to the art of roasting and blending of different green supreme Arabica coffee beans, to come up with a unique flavor and a compelling aroma. WELL a refined and elegant favorable sensation with long and deep balanced and satisfactory aftertaste, we guarantee the best quality coffee drink in our specialty".

Home Comforts Ltd

8.2A1-01(08)

Address: 肯尼亚 Kiambu-Kiambu-Limuru Road Kenya Kiambu-Kiambu-Limuru Redhill Road
Tel: +254722778015
Email: brian@homecomforts.co.ke
Web: www.homecomforts.co.ke

Home Comforts Tea is a Kenyan Tea Exporter of Black Leaf Tea, Purple Tea, White Tea and natural herbal products Hibiscus, Chamomile, Moringa Powder, Lemongrass. We seek collaboration with China tea traders in direct distribution or through China online B2B or B2C E-commerce platforms.

Sinopia Import and Export PLC

8.2A1-01(09)

Address: 埃塞俄比亚 Ethiopia Addis Ababa-Addis Ababa-Abyssina Plaza, 7th floor, Suite # 702
Tel: 00251911211910
Email: info@sinopiaimpex.com
Web: www.sinopiaimpex.com

Sinopia is a supply chain management company currently focusing on trade between China and Africa. With an aggregated three solid decades of experience, we are ideally suited to fulfill all of your trading needs between China and Africa. We hold a keen interest in the Ethiopian market and are committed to boosting Ethiopian export capacity by providing excellent marketing and related services.

Dejen G/meskel Import & Export

8.2A1-01(10)

Address: 埃塞俄比亚 Ethiopia Addis Ababa-Addis Ababa-pecan building gurd shola
Tel: +2511116457308
Email: dejubusiness2016@gmail.com
Web:

Dejen G/Meskel Import & Export is a company dedicated to delivering quality PICTURE PRODUCER(S) WITH TOUCH PICTURE OF PRODUCT 2 PICTURE PRODUCT 1 WITH TOUCH KEY PRODUCTS Oilseeds, Pulses and Spices) OFFERED: Ethiopian Agro-Commodities to its various international overseas customers. Our main exports to china is Sesame and Soybeans. We export Oilseeds, Pulses and Spices .

Best Life Product co., Ltd

8.2A1-01(11)

Address: 柬埔寨 Cambodia Phnom Penh-#26, St. 281, Sangkat Beoung Kok1, Khan Toul Kork
Tel: +85561888668
Email: infor@bestlifeproduct.com
Web: www.bestlifeproduct.com

Best Life Product (BLP) one of the leading company in Bird Nest Product processing. BLP has been registered in 2011, up to now BLP's capacity of production 100 to 150kg per month. We export our products to Taiwan region, China mainland and Japan. Other than Bird Nest Products we also have Cashew nut, dried mango and another Cambodian medicine herb products.

Agroexportaciones Del Sur S.R.L.

8.2A1-01(12)

Address: 玻利维亚 Bolivia Santa Cruz-Santa Cruz de la Sierra-Parque Industrial, Mz. 31, Lado Este UPSA
Tel: +591-3114112
Email: m_loredo@agroexport.com.bo
Web: www.agroexport.com.bo

AgroExport has a balanced, sustainable and diversified farm production growth, processing plant and global marketing of conventional and organic food products of the highest quality at a fair price with an excellent service to our customers.

New Golden Gate (1991) Co., Ltd

8.2A1-01(14)

Address: 缅甸 Myanmar Yangon-Yangon-No.57-59, 4th Street, Lanmadaw Township, Yangon, Myanmar
Tel: 09952292213
Email: newgoldengate1991@gmail.com
Web:

New Golden Gate (1991) Co., Ltd is a a company specializing in processing of beans/pulses and exporting to worldwide market.The products we handle are Green Mung Bean, Green Mung Bean Huskless Split, Black Matpe, Black Eyed Bean, Black Eyed Bean Split, Red Kidney Bean, Chickpeas, Bamboo Bean, Butter Bean, Butter Bean Split, Sultani, Brown Bean, Sesame Seeds, Onion, Tamarind, and Jaggery Powder. No.

缅甸金永食品有限公司 / SHWE AUNG FOOD CO., LTD.

8.2A1-01(15)

Address: 缅甸 仰光-莱达雅-第四工业区32号 Myanmar Yangon-Hlaingtharyar-No.32, Industrial Zone 4,
Tel: 13903009975 / +959968877000
Email: shweaungfood@gmail.com
Web: www.shweaungfood.com

Established in 2016, Shwe Aung Food Company Limited is Myanmar's top-class food manufacturing company focusing on value-added agricultural products including "vacuum fried fruit and vegetable chips", "vacuum fried seafood", "soft dried fruit", etc. with the brand names of "Golden Farm" and "Shwe Thar Yar".

Beekeeping and Research center

8.2A1-01(16)

Address: 尼泊尔 Nepal Province No. 3-Lalitpur-Manbhawan
Tel: +977-1-5547278
Email: smahalaxmi@hotmail.com
Web: www.beekeepingshop.weebly.com

Beekeeping and Research Center viz The Beekeeping Shop, is a pioneer company in Nepal involved in beekeeping and marketing of bee products for more than two decades. It promotes unifloral varieties of Nepali natural honey such as Mustard, Chiuri, Buckwheat, Rudilo and Litchi which has a distinctive flavor and attribute.

DaisyMeats / DaisyMeats Ltd.

8.2A1-01(18)

Address: 赞比亚 Zambia Lusaka-Kafue-P. O Box 350113, Chilanga
Tel: +260977492727
Email: daisymeats@dsdinvestmentsltd.com
Web: www.facebook.com/daisymeats2019m

DaisyMeats, operating since 2012 in Zambia promotes semi organic PIG and POULTRY production & aggregation, processing and distribution of African meat products locally and for Exports. We are building trust by absolute commitment to food safety & hygiene , and timely customer servicing anchored on an innovative distribution model.

Dytech Limited

8.2A1-01(19)

Address: 赞比亚 Zambia Lusaka-Plot 10992 Lusaka,Zambia 10101
Tel: 260955720022
Email: alanchanda@gmail.com
Web:

Dytech Limited is an innovative social impact firm dealing in honey.

InConexus SAS

8.2A1-01(20)

Address: 哥伦比亚 Colombia Cundinamarca-Bogota-Calle 85A 27-25
Tel: +57 1 756 1022
Email: market.int@in-conexus.com
Web: www.inconexus.com

InConexus SAS is a privately owned Colombian green coffee exporter with more than 18 years experience in the development of specialty coffee. Over the years, InConexus has become the leader of sustainably sourced specialty coffee in Colombia, supplying Importers, Roasters and Individuals globally. We strive to create shared value throughout the coffee supply chain!

GAMBIA HORTICULTURAL ENTERPRISE

8.2A1-01(21)

Address: 冈比亚 Serrekunda-16 MAMADI MANJANG HIGHWAY, OLD JESHWANG, GAMBIA Gambia Serrekunda-16 MAMADI MANJANG HIGHWAY
Tel: 2209905088
Email: gamhortmc@gmail.com
Web: www.gamhort.gm

GHE is a multi-purpose Agribusiness company engaged in the entire horticulture value chain from farm inputs distribution, farming, agro-processing, marketing to services. GHE products include fresh fruits, vegetables, groundnuts, cashew nuts, beverages, mango pulp, mango jam, dried mango flakes, hot pepper sauce, cereal superfoods, fortified blended foods, herbal teas, etc.

Moringa Wonder Plus (T) Ltd

8.2A1-01(22)

Address: 赞比亚 Zambia Lusaka-Lusaka-21 Mwalenshi Road
Tel: +260967994481
Email: moringawonderplus@gmail.com
Web: www.moringawonderplus.com

Moringa Wonder Plus (Z) Limited is a registered company under the laws of Zambia. The company is headquartered in Lusaka and managed by highly trained stuff with the passion and full understanding of health & nutrition.

Miombo Honey Processing Ltd

8.2A1-01(23)

Address: 赞比亚 Zambia COPPERBELT PROVINCE-LUANSHYA-Plot 11B Independence Avenue
Tel: 260950935507
Email: miombohoneypro@gmail.com
Web:

Miombo Honey Processing Ltd is a company that buys comb honey from rural beekeepers, processes it into liquid honey and packs it in various sizes under the brand: Miombo Honey -pure, natural for Nutritional and Medicinal Value. Miombo Beeswax is also processed from the remains.

KAKANGA FOOD SUPPLIERS LIMITED

8.2A1-01(24)

Address: 赞比亚 Zambia LUSAKA-LUSAKA-100/680 IBEX HILL KABULONGA ROAD
Tel: +260211264269
Email: kakangafoodsuppliers@gmail.com
Web:

company structure; limited company; C Registration Number 139716: Date Established 6/12/2007: Products Coffee, Honey, Groundnuts and Moringa Powder: our strength is that we have been engaged in so many activities by Zambian Development Agency, our market force in Zambia is we supply Government' Institutions, we also create initiatives which sees us go beyond borders.

PERSIENNES GRP

8.2A1-01(25)

Address: 塞内加尔 Senegal DAKAR-BP 15349 DAKAR-FANN
Tel: 221-77-406-0331
Email: souleymanelo@gmail.com
Web:

PERSIENNES GRP ASPIRES TO SHARE WITH THE REST OF THE WORLD THE NATURAL WONDERS AND SNACKS GROWING UNDER THE AFRICAN SUN AND SOIL. OUR TEAM PRIDES ITSELF ON SOURCING THE BEST OF RAW MATERIALS RANGING FROM PEANUTS, SHEA NUT, SALT, COCONUT TO TIGERNUT THAT WE TRANSFORM INTO THESE WONDERFUL DELIGHTS.

Baobab des Saveurs

8.2A1-01(27)

Address: 塞内加尔 Senegal THIES-Zone industrielle
Tel: +221339517054
Email: commeat@baobab-des-saveurs.com
Web: www.baobab-des-saveurs.com

The story of Baobab des Saveurs embodies the values of the emerging agriprocessing sector in Senegal. It is a young, dynamic company closely linked to the producers and in harmony with the environment of Senegal. The company manufactures organic products from Baobab tree.

Agro Serviços, L.da

8.2A1-01(28)

Address: 莫桑比克 Mozambique Maputo-Av. Vladimir Lenine Nr 174, 1.o Piso
Tel: 258-828484949
Email: gutsamba@gutsamba-mz.com
Web:

Agro Serviços, Lda. aims at offering high quality food and beverages produced mainly from wild fruits indigenous to Mozambique, under its "gutsamba" rade mark. This makes the "gutsamba" brand probably exclusive worldwide. Appart from this comparative advantage, our offer consists of whole foods and beverages, with no chemical preservatives or artificial colorants.

Honey Value Chain Providers (HOVACPRO) Ltd

8.2A1-01(29)

Address: 卢旺达 Rwanda KigaliTown-KigaliTown
Tel: 250 788 592 109
Email: musocharles.2013@gmail.com
Web:

HOVACPRO Ltd is a Rwandan company limited by share with three shareholders, officially registered under Rwanda Development Board (RDB) with a registration number 106336943. The Company has its head office in Rwanda, Kigali city, in Kicukiro District. The aim of HOVACPRO Ltd is that beekeeping can be an income source for the rular urban people. The company is now operating in the whole honey val.

SWEET AND DRIED ENTERPRISES LIMITED

8.2A1-01(30)

Address: 肯尼亚 Kenya Tharaka-Nithi-Nairobi-P.O BOX 102-60400 CHUKA
Tel: 254723562445
Email: sweetndried@gmail.com
Web:

Sweet and Dried Enterprises Ltd is a woman led company established in 2009 based in Tharaka-Nithi County in Kenya. We specialize in processing of dried fruits, dried vegetables and indigenous flour. Our products are ethically sourced from smallholder farmers and directly processed at our facility. We use both solar and electric solar drying technology for processing. Some of our products include.

Stawi Foods and Fruits Limited

8.2A1-01(31)

Address: 肯尼亚 Kenya NAIROBI-P.O. BOX 64565-00620 NAIROBI
Tel: 254720466910
Email: eric5kenneth@gmail.com
Web:

Stawi Foods and Fruits Limited is a Kenyan-based social agro-processing enterprise that specializes in the milling of cereals and dry fruits to produce nutritious pre-cooked and fortified flours for overall household consumption and specifically children. The company is currently looking to increase its production and distribution capacity, an expansion process that requires a capital injection fo.

WARKA TRADING HOUSE PLC

8.2A1-01(33)

Address: 埃塞俄比亚 Ethiopia Oromia Regional State-GELAN -Sidamo Awash Kebele
Tel: 00251-114-450107
Email: derejetaffese872@gmail.com
Web:

ESTABLISHED IN THE YEAR 1997 BY FAMILY MEMEBERS, MR YITBAREK ZEGEYE & MRS YORDANOS BERHANE AND INVOLVED IN EXPORT OF OIL SEEDS, PULSES, CEREALS, SPICES, NATURAL GUM, ETC., UNDER ESTABLISHMENT OF MANUFACTURING OF FOOD & AGRICULTURAL PRODUCTS. NOW HAVING MORE THAN 400 EMPLOYEES AND WITH REGISTERED CAPITAL OF MORE THAN 3,000,000 US DOLLAR.

OLIRA AGRO INDUSTRY PLC

8.2A1-01(34)

Address: 埃塞俄比亚 Ethiopia Addis Ababa-Addis Ababa
Tel: 251966215009
Email: eliasgeneti@gmail.com
Web: www.oliraagroindustry.com

Olira Agro Industry PLC was established in 2008 licensed by the Ethiopian ministry of trade with a principal registration no MT/AA/2/0010354/2004, Our company is specialized in peeling and roasting an aromatic type of sesame seed called Humera type by managing a complete value chain (production to roasting). It contains more than 50% oil and Creamy in color with very pleasant aroma when roasting.

Guts AGRO Industry PLC

8.2A1-01(35)

Address: 埃塞俄比亚 Ethiopia Bole sub city ADDIS Ababa
Tel: +251 911212629
Email: engidu@gutsagro.com
Web:

Guts AGRO Industry PLC is a good processing company that was established in 2005 with a starting capital of 500,000 USD which is grown to a 3milllion USD. The company started its operations by producing a baby food to consumers and emergency market that now diversified with additional products of Iodized salt and animal feed. The company employs an inclusive business model that involves farmers fo.

Amor Perfecto / VIVE CAFE S.A.

8.2A1-01(36)

Address: 哥伦比亚 Colombia D.C.-Bogotá -Calle 76Bis No 20C 70
Tel: +57 1 2485796
Email: lfvelez@amorperfectocafe.net
Web: www.amorperfectocafe.net

The most awarded Coffee Roaster in Colombia, with knowledge to train our customers on how to make good coffee.

PULPAFRUIT SAS

8.2A1-01(37)

Address: 哥伦比亚 Colombia CUNDINAMARCA-BOGOTA-CALLE 18 SUR 28 42
Tel: +57 3138895382
Email: WILSON.RODRIGUEZ@PULPAFRUIT.COM
Web: www.pulpafruit.com

Established in 1992, PULPAFRUIT is committed to the development, production and marketing of innovative fruit products. We offer 100 % natural high-quality processed foods for the national and international markets.

AUX DELICES HONEY LTD.

8.2A1-01(38)

Address: 卢旺达 Rwanda KIGALI-NYARUGENGE-RUGENGE
Tel: 788494010
Email: auxdeliceshoney@gmail.com
Web:

"AUX DELICES HONEY" is a Limited company, located in Kigali Rwanda, established since September 2015. We produce, process, pack and sell honey that we take straight from beehives. Our products are certified and we are licensed by the Rwanda standards board. We work with beekeepers and empower them with skills to meet the standard required to access the international market.

Sein Than Agro Industry Co., Ltd

8.2A1-01(40)

Address: 缅甸 Myanmar Yangon-Yangon-No. 17/18, 4th Floor, Bahosi Housing, Lanmadaw Township
Tel: 95-1-225072
Email: kozabu@gmail.com
Web: www.shwethazinmyanmar.com

We provide quality agricultural products of sesame seeds for oil & food grades, hulled sesame seeds with high quality aroma for confectionery and bakery markets, beans for sprouting & food grades, ginger & turmeric for food ingredients and supplements for medicine to all over the world especially China, Japan, Europe.

MYANMAR GOLDEN PRODUCE CO., LTD.

8.2A1-01(41)

Address: 缅甸 Myanmar YANGON-YANGON-NO. 18A, INSEIN ROAD, HLAING TOWNSHIP
Tel: +959402667557
Email: SIMON@MYNMARGP.COM
Web: www.myanmargp.com

Myanmar Golden Produce (MGP) is Myanmar's leading exporter of fresh and processed fruits and vegetables. The primary goal of the company is to provide consumers worldwide with the freshest and highest quality products from Myanmar - The Golden Land. MGP products are made from 100% fresh produce, what you taste is 100% fragrant of the fruits, not sugar like most of the products in the market.

Golden Taste Co., Ltd

8.2A1-01(42)

Address: 缅甸 Myanmar Corner of 61st and 14th street, Mandalay, Myanmar
Tel: 9524021421
Email: goldentaste8@gmail.com
Web:

Golden Taste Co., Ltd has been produced pure sesame oil, pure peanut oil and chick pea split since 1970. Company also has HACCP certified by sopporting ITC, International Trade Centre on early this year. Our company also has been exported some of the crops to Muse and Chin Shwe Haw, China Myanmar border trade Zone.

Fresh & Green

8.2A1-01(43)

Address: 缅甸 Myanmar Yangon-Yangon-Landuse Division Compound, Corner of Bayintnaung Rd & Saywa Setyone St, Insein
Tel: +9595192799
Email: anthony.aung@smartwaymyanmar.com
Web:

Fresh & Green manufactures seafood and agricultural products. Though our farms, factories and cold storages are based in Myanmar, we also aim to export our products to other countries. We use innovative machinery and technologies (e.g solar dryer dome systems) to maintain freshness. Our team is strongly dedicated to supplying nutritious foods at the best prices.

CAFE QUINDIO

8.2A1-01(45)

Address: 哥伦比亚 Colombia Quindio-ARMENIA-CR 19 33 N 41
Tel: +577495970
Email: andres.moreno@cafequindio.com.co
Web: www.cafequindio.com.co

Café Quindío S.A.S. is a coffee company with 23 years of experience and a pioneer in the development of products of the famous grain in Quindío, Colombia. In this department cherries are harvested enriched and classified with special techniques that have made Café Quindío a prestigious brand in the palates of coffee connoisseurs.

Ah May Htwar Trading Co., Ltd

8.2A1-01(46)

Address: 缅甸 Myanmar Magway Province-Magway City-"No.18, Taung Twin Street, Aung Say Da Nar-B Ward, Magway Division, Myanmar"
Tel: 95107965
Email: info@ahmayhtwar.com.mm
Web:

Ah May Htwar (AMH) Trading Company Limited is a leading edible oil production and distributing company providing superior quality cold pressed peanut oil, sesame oil and oil cakes to business and individuals. AMH has the largest distribution network among all branded edible peanut oil players in Myanmar, with about 20 stock points, more than 2,500 distributors and 1.5% Retail Penetration which sp.

Sunshine Nut Company

8.2A1-01(47)

Address: 莫桑比克 Mozambique Maputo-Matola-Beleluane Industrial Park, Lot 13, Mozambique, Africa
Tel: 258 820625764
Email: don@sunshinenuts.com
Web:

At Sunshine Nut Co., our cashews are grown, roasted and packaged at the source in Mozambique. We are redefining the way cashews taste, not only in our product freshness but with our five flavors. "We Make the World's Best, To Make the World Better".

Finana - Banana flour process factory

8.2A1-01(48)

Address: 莫桑比克 Mozambique Maputo-Manhiça- EN n1, Bairro Eduardo Mondlane
Tel: 258842353913
Email: filomatimbe@gmail.com
Web:

"Finana, is banana flour processing company that also produces banana as row material and processes banana peel for animal feed. Established in 2015, is based in Manhiça district - Mozambique. Banana flour is a product with high nutritional value, 100% natural, easy to use and multiuse product.

DT Veitingar Ehf

8.2A1-02

Address: 冰岛 Iceland Reykjavikurvegur 68
Tel: 00354-8620598
Email: heklaiceland@163.com
Web:

we are travel agent with outstanding reputation and more than 15 years of experience in group travelling, restaurant & retail of Sea Cucumber.

产商物流株式会社 / SANSHO LOGISTICS CO., LTD

8.2A1-03

Address: 日本 东京都千代田区神田和泉町 1-4-7 早尾楼 4楼邮编101-0024，日本 Japan 1-4-7-4F, Kanda izumi-cho, chiyoda-ku, tokyo, 101-0024,japan
Tel: 03-5809-1028
Email: 170538823@qq.com
Web:

产商物流成立于平成23年7月。员工14人。主要从事海运买卖、集装箱接待业务和贸易顾问业务。公司的年销售额达到了8亿元。
Sansho logistics co., Ltd was founded in July of 23 years. There are 14 employees. Mainly engaged in shipping business, container reception business and trade consulting business. The company's annual sales reach 800 million yuan.

Qual Pak

8.2A1-07

Address: 波兰 Poland Sobieskiego 41,05-510 Konstancin Jeziorna, Poland
Tel: 020 23837769
Email: cathyliuxia@deco-sunshine.com
Web:

European specialist in sweets that has been designing successful candy concepts for many years! Our strength lies in our passion for sweets and gifts, our flexible organisation and experience. These attributes help us develop amazing and distinctive candy concepts of outstanding quality. Sweet Bouquet is the brand of Candy Factroy from UK.

Way Sauce Sdn Bhd

8.2A1-08

Address: 马来西亚 Malaysia Selangor-Shah Alam-23 Jalan Kartunis U1/47
Tel: +60 3 5567 9999
Email: vts@waysauce.com
Web: www.waysauce.com

We are a manufacturer of Asian sauces. We specialise in cooking sauces and condiments for Malaysian and Singaporean cuisines. Our products are all-natural - we do not use any artificial preservatives or additives in our products. We are committed to the highest levels of food safety - we have obtained BRC and IFS certification. We are also Halal certified.

GOLD CHOICE FOOD INDUSTRIES SDN BHD

8.2A1-10

Address: 马来西亚 Malaysia Penang-Simpang Ampat -No.931, Jalan Perindustrian Bukit Minyak 2, Taman Perindustrian Bukit Minyak, 14100 Simpang Ampat, Penang, Malaysia.
Tel: 6045070988
Email: feelgood@goldchoice.com
Web: www.goldchoice.com

Gold Choice was established in 1994, and also one of the leading Instant Beverage Products Manufacturer in Malaysia. Through the latest in technology and formulas unique to Gold Choice, we have become a quality food and beverage company with savvy observation of consumer trends and market demands. Gold Choice has a wide variety of instant beverages. The famous product is White Coffee.

SC "Confectionery Corporation "ROSHEN"

8.2A1-12

Address: 乌克兰 Ukraine build.1, Nauky avenue 1, 03039 Kyiv, Ukraine
Tel: 021-32210069
Email: roshen.cn@outlook.com feliz5@126.com
Web:

Roshen. Sharing the Sweet Magic. Roshen is a leading European confectionery producer, showcasing the most innovating and advanced way of producing sweets in the world, focusing on the quality, satisfying a large variety of taste preferences and emotional needs of consumers around the globe.

香港亚米国际贸易有限公司 / Hongkong Youngme International Trading Limited

8.2A1-13

Address: 香港地区 HongKong China ROOM B, 10/F., TOWER A, BILLION CENTER, 1 WANG KWONG ROAD, KOWLOON BAY, KOWLOON, HONG KONG.
Tel: 021-51760999-66761
Email: gongming@laiyifen.com
Web: www.lyfen.com

亚米Youngme是来伊份旗下进口零食品牌。每年亚米Youngme与来自五大洲，美、澳、俄、韩、法、英等20余个国家地区的一线生产商强强合作，9大品类、近百款商品，为消费者带来原汁原味的全球美味。2018年首届进博会是“亚米Youngme”第一次品牌大型亮相，并通过这一平台举办了“亚米Youngme”的首次亮相品牌发布会。这是来伊份全球平台化战略迈出的重要一步，也是加速全球平台化部署的重大议程。
HONGKONG YOUNGME INTERNATIONAL TRADING LIMITED is founded in 2015. Youngme, the imported snack food brand under it, works with prime manufacturers from more than 20 countries and regions to bring products of 9 categories to its consumers. In 2018, the first CIIE witnessed the grand debut of "Youngme". Its productes have launched in more than 2000 stores of the most famous snack chains in China.

Hafnarnes VER hf.

8.2A2-01(02)

Address: 冰岛 Iceland Olfus-Thorlakshofn-Oseyrarbraut 16b
Tel: +354-483-3548
Email: hsver@simnet.is
Web: www.hafnarnesver.is

Hafnarnes VER hf. is fishing and producing wild caught Sea Cucumbers caught in the pure North Atlantic and produced with clean pure water.

Eimverk 酿酒公司 / Eimverk Distillery

8.2A2-01(03)

Address: 冰岛 Iceland Iceland-Gardabaer-Lyngás 13
Tel: +3547718484
Email: sigrun@eimverk.com
Web: www.flokiwhisky.is

Eimverk酿酒厂以冰岛当地种植的食材酿造高品质的冰岛蒸馏酒。主要酒类有Flóki威士忌，Vor Gin及冰岛白酒。
Eimverk distillery produces high quality Icelandic Spirits from Icelandic locally grown ingredience. Eimverk produces Flóki whiskey, Vor Gin and Icelandic Baijiu.

BRIM

8.2A2-01(05)

Address: 冰岛 Reykjavik-101-Nordurgari 1 Iceland Reykjavik-101-Nordurgardi 1
Tel: +3546943388
Email: valdis@brim.is
Web: www.brim.is

Brim hf. is one of Iceland's largest seafood companies. The company has a long history and extensive experience and expertise in the utilization of natural resources and fish production, which is reflected in all its activities.

Life Iceland EHF

8.2A2-01(06)

Address: 冰岛 Iceland Reykjavik-225 Alftanes-Gesthusavor 4
Tel: 00354 8218918
Email: rositayufanzhang@gmail.com
Web: inprocessing

LIFE ICELAND EHF brand "Life Iceland" means the evergreen tree of life. Since its establishment, the company has inspirational to bring the best zero-pollution and pure marine products of Iceland's North Atlantic to China. The company's seafood has already entered the Chinese market. The company has participated in the signing of bilateral trade zero tariffs on behalf of Iceland in Beijing.

Gullborg

8.2A2-01(07)

Address: 冰岛 Iceland 110 Reykjavik-Bildshofda 18
Tel: 003546961773
Email: magnus@gullborg.com
Web: www.goods2get.com

Gullborg是一家與中國進出口業務超過37年的公司。從中國進口各種產品，現在以「為何王」品牌向中國出口優質歐洲食品。Gullborg是冰島的許多其他歐洲生產商的經銷商，如漢高 - 施華蔻化妆品和護髮品。
Artdeco Cosmetics和Bott industrial Germany Gullborg is a company that has been in import & export business with China for over 37 years. Importing various products from China and now exporting high quality European food products into China under the brand Why King. Gullborg acts as distributor in Iceland for many other European producers, such as Henkel - Schwarzkopf cosmetics and haircare, Artdeco Cosmetics and Bott industrial Germany.

CHARLOTTE'S WEB, INC.

8.2A2-02

Address: 美国 United States of America CO-Boulder-2425 55th Street, Suite 200
Tel: +1.720.744.0183
Email: jackie.kuspa@charlottesweb.com
Web: www.charlottesweb.com

Charlotte's Web, the pioneer and leading Hemp extract company, the most trusted Hemp extract products in the world. Charlotte's Web Hemp is grown in Colorado; produced and packaged in an FDA registered facility, with 3rd party verified GMP.

Vancouver Freeze Dry Ltd.

8.2A2-05

Address: 加拿大 Canada BRITISH COLUMBIA-Langley-unit 101, 5498 267th St
Tel: +1 6475466886 / +1 6046250855
Email: Minningchen@Vancouverfreezedry.com
Web: vfdfood.com

温哥华冻干营养工程科技有限公司(VFD)是一家集现代化生物工程技术、冷冻干燥技术研发创新，拥有生产、加工、设计、包装、营销于一体的综合化企业。公司现已以Sundrench为主要品牌，以创新研发、生产出多种冻干混合蔬果系列健康零食以及功能性食品、纯天然的食品添加/膳食补充剂等一系列特色产品等等。公司所有产品都严格采用北美西海岸优质的果蔬为原料，当地冷链运输以及生产，保证每一口的天然营养和美味。
Vancouver Freeze Dry Co., Ltd. (VFD) is an integrated enterprise integrating modern bioengineering technology and freeze-drying technology research and development, with production, processing, design, packaging and marketing. All products are strictly based on the high quality fruits and vegetables on the west coast of North America, ensure the natural nutrition and delicious taste of each mouth.

OJSC "Confectionery factory "Slodych"

8.2A2-03

Address: 白俄罗斯 Belarus Minsk-Minsk-Radialnaya, 54/2
Tel: 15601606082
Email: anton.levchenia@outlook.com
Web: www.slodych.by

OJSC "Confectionery factory "Slodych" is the market leader in biscuits and confectionery products in the Republic of Belarus.

Zotter Schokoladen Manufaktur GmbH

8.2A2-04

Address: 奥地利 Austria Bergl 56 8333 Riegersburg Austria
Tel: 0086-21-60161633
Email: ann.zhang@zotter.cn
Web: www.zotter.at

In 1987, Josef Zotter opened up the Zotter confectionary shop in Graz. In 2007, he expanded of the manufacture to bean-to-bar production and to the Chocolate Theatre. The fairly traded organic cocoa is purchased directly, roasted, ground, milled and conched. With this, Zotter lays the foundation for the development of the manufacture into a centre of competence for chocolate.

Sanotact GmbH

8.2A2-06

Address: 德国 Germany 48157 Münster-Hessenweg 10
Tel: 0755-33916888 ex 880
Email: Adam.Liu@amos-sweets.com
Web: www.sanotact.de/en.html

Sanotact is one of the leading international specialty supplier of functional food and non-prescription pharmaceuticals. Since its founding in 1951, sanotact has maintained its head-quarters in the Westphalian city of Münster.
The sanotact brands cover a broad range of products, from food supplements to functional confectionary, brands include: blink, impact, sanotact etc.

LINACO MANUFACTURING (M) SDN. BHD.

8.2A2-07

Address: 马来西亚 Malaysia No 17, Lorog Keluli 1C, Taman Perindustrian Bukit Raja Selatan, Seksyen 7,4000 Shah Alam, Selangor Darul Ehsan, Malaysia.
Tel: +60333443933
Email: kobe@linaco.com.my
Web: www.linaco.com.my

LINACO Manufacturing (M) Sdn.Bhd. set up a plant in 1992 in Batu Pahat, the second largest city in Malaysia's johor state. The plant covers about 26 hectares and the production line covers about 16 hectares. It's one of the largest coconut producers in Malaysia, with full coconut products.

绿色巧克力工厂有限公司 / Green Chocolate Works LTD.

8.2A2-08

Address: 加拿大 哥伦比亚-高贵林-帆船街102-85号 Canada Coquitlam-102-85 Schooner Street
Tel: 604-540-1400
Email: 2428313108@qq.com
Web: www.greenchocolate.ca

绿色巧克力工厂有限公司位于加拿大不列颠哥伦比亚省温哥华特区高贵林市，自1996年建厂以来至今已有23年的历史，主要生产和经营各种巧克力产品。我们的产品全部采用欧洲、美洲和加拿大本地的纯天然原料，承继欧洲（比利时）百年传承的精湛巧克力制作工艺，100%纯手工制造出来的，并使用环保的绿色包装。我们很荣幸的被英国零售商协会（BRC）认证为有机食品、公平贸易和无谷蛋白自由品牌巧克力。
Green Chocolate Works Ltd. is located in Coquitlam, BC, Canada. It has a history of 23 years since its establishment in 1996. It mainly produces and manages various chocolate products. Our products are all made of pure natural raw materials from Europe, America and Canada, inherited from Belgium's century-old exquisite chocolate production process, and use environmentally friendly packaging.

RONGHUI GLOBAL LIMITED

8.2A3-01(01)

Address: 香港地区 HongKong China FLAT/ RM 803 8/F EASEY COMMERCIAL BUILDING 253-261 HENNESSY ROAD WANCHAI HK
Tel: 021-34713897
Email: peixuhui@huanqiushoufa.com
Web:

荣辉环球有限公司是一家从事食品、农产品的国际贸易、投资、资讯、服务的一家公司。公司开拓进口食品，将营养、健康、美味、精致的进口食品带给我们的客户。
Ronghui Global Limited is a company engaged in international trade, investment, information and services of food and agricultural products. The company develops imported food and brings nutritious, healthy, delicious and refined imported food to our customers.

伊梭（香港）国际控股有限公司 / Easail (Hongkong) International Holding Co., Limited

8.2A3-01(02)

Address: 香港地区 HongKong China RM. 19C, LOCKHART CTR., 301-307 LOCKHART RD., WANCHAI HK
Tel: 13167082233
Email: freya.shan@easail.com.cn
Web:

Easail is committed to discover and bring high-quality foods from Mediterranean as well as the culture and lifestyle to Chinese consumers. Therefore, we remain focused in the area with deep passion and long-term vision.As the slogan reads, Easail is "Not only a professional seller, but also a solution provider".

韩国真农株式会社 / Korea Jin Nong (An) Horticultural Firm

8.2A3-01(03)

Address: 韩国 庆尚南道-金洲市-四峰面东部路1651-22 ROK(Republic of Korea) Kyung Sang Nam Do-Jin Ju City-1651-22 Dongbu Road of Sabong-myeon
Tel: 053287569589
Email: minibochina@163.com
Web: www.iceplant.co.kr

植物组织培养和栽培冰草以及深加工。有以冰草发酵液为主料的饮料、茶、醋、酒、化妆品、保健食品等。
Plant tissue culture and cultivation and processing and deep processing of Ice plants. Products Include the beverage, tea, vinegar, wine, cosmetics, health food, etc.

丝绸之路国际总商会 / SILK ROAD CHAMBER OF INTERNATIONAL COMMERCE

8.2A3-01(04)

Address: 香港地区 香港中环夏悫道12号美国银行中心8楼811-817室 Hong Kong 811-817. Bank of America Tower 12 Harcourt Road Central. HK
Tel: 34713897
Email: maxzhoum@qq.com
Web: www.srcic.org

丝绸之路国际总商会（简称“总商会”），英文译名：Silk Road Chamber of International Commerce（译名缩写：SRCIC），是世界上首个以“丝绸之路”命名的、以“一带一路”各国国家级商协会为主体的国际商协会联盟组织。
Silk Road Chamber of International Commerce (SRCIC), mainly composed of national chambers of commerce of the Belt and Road countries, is the first transnational business confederation named after the Silk Road.

Bagus Group印尼百家适集团 / Bagus Group（印尼百家适集团）PT Suraymas Mentari

8.2A3-02

Address: 印度尼西亚 DKI Jakarta-jakarta utara-The Koppel Building Suite6. jl. pluit selatan raya no.10 Indonesia DKI Jakarta-jakarta utara-The Kopple Building Suite6. JL. pluit selatan raya no.10
Tel: +62216617845 / +6281585062122
Email: yanjun.bagus@gmail.com
Web:

Bagus Group, established in 1976, the biggest manufacturer of daily chemical & household products in Indonesia, who has the highest market share in the fields of insect proof, mildew proof and deodorization. Our business also covered in international trading, mining, investment, food & beverage franchise and other some fields.

翠林（新西兰）实业有限公司 / Cuilam Industry Limited

8.2A3-03

Address: 新西兰 奥克兰 New Zealand Level 15, 36 Kitchener Street, Auckland Central, Auckland
Tel: 13602602207
Email: liangwenshi@hdnmgroup.com
Web:

翠林（新西兰）实业有限公司成立于2015年7月7日，主营业务为实业投资，国际贸易。涵盖乳制品，肉制品生产贸易，住宅及商业地产投资等多领域。公司秉承集团“走出去，引进来”的发展方向，结合世界发展趋势，将广阔的市场需求与新西兰优质的资源相匹配，实现优质资源价值最大化。翠林（新西兰）实业有限公司以真诚的服务理念，一流的产品质量，卓越的投资视野不断取得更大的发展。
Cuilam Industry Limited was incorporated on July 7, 2015. We are focusing on industrial investment and international merchandising. Cuilam is committed to securing high-quality overseas resources to serve Chinese consumers. We target on producing premium natural products to establish green natural brand. Serve customers with sincere, establishing itself with products' quality.

FERRERO S.P.A.

8.2A3-04

Address: 意大利 Italy PIETRO-ALBA-PIAZZALE PIETRO FERRERO SNC ALBA(CN) CAP 12051
Tel: 20359339
Email: giulia.zhu@ferrero.com
Web:

With a consolidated turnover of 10.7 billion Euros at the end of FY 2017/2018, Ferrero is amongst the market leaders of the confectionery sector and the third worldwide Group in the chocolate confectionery market. Its products are present and sold in more than 170 countries.

Chocolaterie Guylian NV

8.2A3-05

Address: 比利时 Belgium Europark Oost 1,9100 Sint-Niklaas
Tel: +86 21 54096600
Email: chrisshi@ted-foods.com
Web:

Guylian was born in the 60s of last century, the founder of sea shell chocolate. Sloan "Love yourself, start with GUYLIAN"! The only chocolate brand that has been awarded the gold medal by the Belgian Royal family and is called the "supreme of the chocolate kingdom". European Union recognized pure cocoa butter chocolate, real value, health.

ALPES D'OR AG

8.2A4-01(01)

Address: 瑞士 Switzerland Zug-Bahnhofstrasse 21
Tel: 0571-86081738
Email: info@alpesdor.ch
Web: www.alpesdor.ch

ALPES D’OR AG，致力于向中国出口欧洲高品质的巧克力和冰淇淋产品。经过两年的快速发展，2017年已经成为宁波港口最大的巧克力出口商。ALPES D'OR爱普诗品牌创立于1985年，传承欧洲数百年的巧克力风味，巧克力的品味鉴赏家，针对中高端消费者，传递微笑理念。产品均采用UTZ认证可可豆。拥有丰富的甜品品类，包括经典夹心巧克力，排块巧克力，榛仁夹心巧克力等。
Alpes d'Or AG is a premium Swiss and Belgian Chocolate company that was founded in 1985 - Switzerland. Getting its inspiration from The Swiss Alps, Alpes d'Or produces chocolate to the highest of standards for our customers, and provides solutions for customized products. With natural ingredients, UTZ certified cocoa we sells its luxurious Chocolates to customers in China and internationally.

M-Industry AG

8.2A4-01(02)

Address: 瑞士 Switzerland Zurich-Limmatrstrasse 152
Tel: +86 21 3157 6030
Email: yvonne.cai@mindustry.com
Web: www.mindustry.com

M-Industry is part of the Swiss Migros Group. With its 23 Swiss companies and nine foreign businesses, M-Industry produces over 20,000 high-quality food and non-food products, making it one of the biggest own-brand producers in the world. It exports quality Swiss products to around 50 countries.

E.I.S.(SUISSE)IVESTERNENTS & TRADING SAGL

8.2A4-01(05)

Address: 瑞士 Switzerland Ticino-Lugano-VIA RONCHETTO DI ORLINO, 3a
Tel: +41 912251223
Email: luna.y.m@hotmail.com
Web:

Imports and exports and marketing of industrial and craft products, especially from Europe to China.

Schuler & Cie AG

8.2A4-01(09)

Address: 瑞士 Switzerland SZ-6423 Seewen -Frnazosenstrasse 14
Tel: 0086-21-60452208
Email: 54626796@QQ.COM
Web: www.schulerwine.cn

轩乐酒业有限公司是一家瑞士独资的葡萄酒公司，拥有瑞士/意大利/西班牙等众多产区近300种不同品种的葡萄酒，致力于在全球范围寻找合作伙伴。
Schuler Wine is one of the most renowned wine maker and trader, we own our vineyards, laboratory and cellars, and we are looking forward to cooperating with all distributors, retailers and collectors.

瑞士中心/瑞中经济协会 / Fondation Swiss Centers/Swiss Chinese Chamber of Commerce

8.2A4-01(03)

Address: 瑞士 Switzerland Marin-Epagnier-CH 2074-Avenue des Champs-Montants 12b
Tel: +86 21 2076 5593
Email: yulia.jin@swisscenters.org
Web: www.swisscenters.org

成立于2000年，瑞士中心是一个服务于瑞士经济体的非盈利性机构，旨在为瑞士企业在华投资兴业、发展壮大，提供支持与服务。瑞士中心不仅提供随时能使用的办公室、仓库、生产车间，同时也帮助其会员公司建立良好的政府关系并提供专业企业服务。今天，瑞士中心是亚洲最大的瑞士企业群，其使命是为放眼中国、亚洲以及全球市场的瑞士中小企业提供战略性优势。与合作伙伴一起，瑞士中心已经服务了超过350家瑞士企业。
Founded in 2000, FSC is a non-profit organization supporting Swiss companies in business set-up, expansion and operations in China with industrial and office facilities in China. The mission is to give a strategic edge to Swiss SMEs which wish to compete in the Chinese, Asian, and ultimately global market. For more information, kindly visit: www.swisscenters.org.

Zinor Qu Limited

8.2A4-01(07)

Address: 香港地区 Hongkong-Kowloon-Suite 2611, 26F, Langham Place, Mongkok
Tel: 13681630057
Email: info@zinorqu.com
Web:

ZQ是一家中瑞合资公司。它不仅仅专注于从欧洲进口奶酪，而且是为数不多的活跃在中国市场的公司之一，也为消费者提供完整的奶酪解决方案。在销售方面拥有最大的奶酪品种之一，它还提供存储，处理，培训，设备等的b2b解决方案。该公司执着于是为客户提供持续享受优质奶酪难忘的体验，尤其是提供了来欧洲特定产区的真正宝藏级奶酪。来自瑞士和意大利的奶酪是我们的主要特色之一，目前，诺睿在中国拥有超过80种不同类型的奶酪。
Zinòr Qu Group is a Swiss-Sino company is selling natural and premium cheeses. Holding one of the largest cheese assortments on sales it also provides b2b solution in storage, treatment, training, equipment etc. Cheeses from Switzerland and Italy is one of our key specialty. Currently Zinór Qu is carrying more than 80+ different types of cheeses in China.

Salines Suisses SA

8.2A4-01(10)

Address: 瑞士 Switzerland 4133 Pratteln-Rheinstrasse 52
Tel: +41 24 436 03 24
Email: mona.heiniger@saline.ch
Web:

With the salt produced at its Schweizerhalle, Riburg and Bex sites, Swiss Saltworks supplies the whole of Switzerland with salt. Our salt products cover all the requirements and application areas for the general public in Switzerland, and for the country's industrial and commercial sectors.

阿彭策尔啤酒 / Appenzell Beer

8.2A4-01(04)

Address: 瑞士 Appenzell-Appenzell-Brauereiplatz 1, CH - 9050 Appenzell Switzerland Appenzell-Appenzell-Brauereiplatz 1, CH-9050 Appenzell
Tel: +41 71 788 01 40
Email: t.lenz@appenzellerbier.ch
Web: www.appenzellerbier.ch

1886年以来，Locher 家族一直致力于阿彭策尔酿造独特的特色啤酒。直接取自阿尔卑施泰因的新山泉水。不断开发新产品，保持阿彭策尔产品最上等，最纯正，最佳品质。我们的产品包括姜汁啤酒，不含酒精的果啤酒Bschorle, 果味烈性的Hoi 家族，在欧洲频繁获得多次大奖的独一无二的单一麦芽瑞士威士忌。征服味觉的啤酒香醋，以及美味香脆的薯片。
Since 1886, the Locher family has been dedicated to Appenzell unique specialty beer. The pure mountain spring water directly from Alpstein. In the pursuit of convincing taste and quality, but also in continuously producing. Swiss Quality is the best garantie.

CHOCOLATS ET CACAOS FAVARGER SA

8.2A4-01(08)

Address: 瑞士 Switzerland VERSOIX-CHEMIN DE LA CHOCOLATERIE 2 - CP 148, 1290
Tel: +86-21-62335990
Email: info@euresources.net
Web: www.favarger.com

Favarger is established in 1826, and it is one of the oldest chocolate maker in Switzerland ,and all the ingredients are nature, from selection of raw material to the finished product, Faverger always keep high quality and they are also the best Bean to bar chocolate in Switzerland.

HUG AG

8.2A4-01(11)

Address: 瑞士 Switzerland Lucerne-6102 Malters-Neumühlestrasse 4
Tel: ++41 41 499 75 64
Email: peter.schmid@hug-familie.ch
Web: www.hug-familie.ch

Wernli is a brand from HUG AG, a Swiss Family Company. The recipe for the quality and good taste of our products is in the hands of the people who work with them. True to our motto: Sincere, entrepreneurial and conscientious.

Centravo AG

8.2A4-01(12)

Address: 瑞士 Switzerland Berne-Lyss-Industriering 8
Tel: 0041788805064
Email: b.stauffer@centravo.ch
Web:

Centravo ist the biggest meat processing enterprize in Switzerland. It owns several Brands of fresh and frozen meat products, oils and fats and collagen. Its companies Swiss Nutrivalor, Nutriswiss, Collaswiss are meeting the highest quality standarts of swiss and international certifications.

合利发私人有限公司 / Ha Li Fa Pte Ltd

8.2A4-02(04)

Address: 新加坡 新加坡257号班兰环道新加坡邮区128434 Singapore 257 Pandan Loop Singapore 128434
Tel: +6592967835
Email: jynyap@halifa-bobo.com
Web: www.halifa-bobo.com

Ha Li Fa Pte Ltd is a Singapore-based manufacturer founded in 1987 and established in 1993. Since our inception, we have gained a firm foothold in local and international markets through our brand, BoBo. BoBo is a homegrown Singaporean brand that specialises in surimi-based seafood and poultry products. Using only high grade of Threadfin Bream, BoBo is famed for its fish balls in the Singapore.

Kim Hing Food Industries Pte Ltd

8.2A4-02(07)

Address: 新加坡 Singapore 60 south bridge road #058690
Tel: 65382288
Email: zeteng@kimhingfood.com.sg
Web:

Established in 1957 by Mr Tan Kim Pheow, Kim Hing Company processes and sells Chinese delicacies such as bird's nests and other traditional health products. With the advancement in food technology in the 1960s, Kim Hing Company ventured into food processing, focusing on the preparation of bird's nests.

Enohub Pte Ltd

8.2A4-02(02)

Address: 新加坡 10 Bukit Batok Crescent #04-06, The Spire. Singapore 658079 Singapore 10 Bukit Batok Crescent #04-06, The Spire, Singapore 658079
Tel: +65 69149930
Email: chuyang@enohub.com
Web: www.eno-hub.net

ENOHUB，立足新加坡与中国上海，货源及销售网络覆盖东南亚、中国大陆、日本和中东各大城市。我们充分利用传统媒介与新媒体平台，优选多种电商系统，联合品牌超市及特许零售专柜，致力于为优质产品提供“全媒体推广＋全链路销售”的一站式解决方案。1) 以社交媒体营销打造O2O新零售概念。2) 以独有超商网络凸显品牌公众形象。3) 以品牌形象塑造撬动高端消费市场。
ENOHUB with its presence based in Singapore and Shanghai, leverages on both traditional and new media platforms and e-commerce gateways to gain maximum B2C / B2B exposure. 1) Building the contemporary 020 sales platform using social media networks. 2) Accentuating brand image using an exclusive network of marts. 3) Leveraging on strategic branding to trigger and motivate high-end consumers.

Nature's Farm Pte Ltd

8.2A4-02(05)

Address: 新加坡 Singapore Singapore-101 Eunos Ave 3 #06-01 Singapore 409835
Tel: +6567489818
Email: jenniferwang@naturesfarm.com
Web: www.naturesfarm.com

Established in 1982, Nature's Farm is a one-stop store that offers a diverse and comprehensive range of nutritional supplements for the whole family, from children to adults and seniors. We are the first health food retailer chain in Singapore to introduce Western supplements into the local market.

Foodie Drools Pte Ltd

8.2A4-02(08)

Address: 新加坡 Singapore Singapore-Singapore-1 Raffles Place, #19-61, One Raffles Place Tower 2
Tel: 6592298743
Email: commercial@flavoursoftheeast.com
Web: www.flavoursoftheeast.com

Born out of a love for diverse Asian cuisines, Foodie Drools Pte Ltd is an innovative Singaporean snack food company specialising in Asian flavoured potato chips! Under the brand F.EAST, they launched a series of flavours previously unheard of, such as the world's first Hainanese Chicken Rice potato chips, Egg Prata With Fish Curry potato chips, and Singapore Laksa potato chips.

金源高技农业科研私人有限公司 / Kin Yan Agrotech Pte Ltd

8.2A4-02(03)

Address: 新加坡 新加坡-6号，宏茂桥第2工业区 Singapore Singapore-6 Ang Mo Kio Industrial Park 2
Tel: +6564826006
Email: ernest.chan@hockhuagroup.com.sg
Web:

As the biggest instant multigrain beverage manufacturer in Singapore and Malaysia with ISO9001, ISO22000, HACCP, GMP and HALAL certification, we welcome OEM and distributors for our bestselling 22 Complete Nutrimix.

Lim Kee Food Manufacturing Pte Ltd

8.2A4-02(06)

Address: 新加坡 Singapore Singapore-Singapore-28 Woodlands Terrace (S)738450
Tel: (65) 6758 5858
Email: khimwee@limkee.com
Web: www.limkee.com

With over 30 years of manufacturing and distribution experience, Lim Kee Food Manufacturing Pte Ltd (Lim Kee) is one of Singapore's leading homegrown food manufacturers in the Chinese Pau (filled steamed buns) industry.

Optima-Daribell Pte Ltd

8.2A4-02(09)

Address: 新加坡 Singapore Singapore-60 Kaki Bukit Place, Eunos Techpark #07-05
Tel: 65 67410638
Email: budhi@deli-indo.com.sg
Web: www.deli-indo.com.sg

Producer and exporter of premium quality food. Product ranges from Thousand Layer Cake, Shrimp Roll Snacks, Coconut Palm Sugar and others. Current export markets: China, Malaysia, USA , Japan, Europe and Australia.

NHE TECHNOLOGY PTE. LTD.

8.2A4-02(10)

Address: 新加坡 Singapore SINGAPORE-SINGAPORE-16 JALAN KILANG TIMOR #06-02, REDHILL FORUM
Tel: 96740677
Email: eric@mynhe.com
Web: www.mynhe.com

NHE是一家致力于向全世界提供最优质的对人类健康有促进作用的植物原料以及成品的新加坡企业。NHE所经营的范围包括中高端有机养生茶，花草茶，贵系药材，汤包，以及草药原料，保键品原材料，蜂产品的生产及销售。
NHE is a Singapore enterprise that dedicates itself to providing raw ingredients and finished products of best quality to promote physical health worldwide. NHE produces oriental herbs, nutritional supplements' ingredients, bee products, tea products and other natural products.

Fassler Gourmet Pte Ltd

8.2A4-02(13)

Address: 新加坡 Singapore-Singapore-46 Woodlands Terrace Singapore 46 Woodlands Terrace
Tel: 62575257
Email: annie@fasslergourmet.com
Web: fasslergourmet.com

法食乐成立于1991年，是新加坡著名烟熏海鲜制造厂，提供烟熏鲑鱼与高级海鲜加工产品。公司同时拥有中央厨房，生产冷冻即食产品、欧式浓汤与酱料。法食乐持续20年维持A级食品工厂认证，于2018年获颁“新加坡农粮兽医局食品安全卓越奖”之白金奖，同时拥有清真食品认证、FSSC22000食品安全国际认证，可持续海产品加工的MSC与ASC认证，亦是农粮兽医局的“食品安全夥伴”。我们拥有严格的采购系统、严谨的生产规格和创意的研发精神。
Established since 1991, Fassler Gourmet is the seafood smokehouse in Singapore. We produce a variety of smoked seafood, premium soups, and ready-to-eat. We are an SFA-licensed Grade A plant, and is certified HALAL and FSSC22000. We also attained the MSC and ASC CoC certifications for sustainable seafood. Fassler is committed to sourcing responsibly, producing sincerely and creating artfully.

PREMIER FOODS HOLDING PTE LTD

8.2A4-02(16)

Address: 新加坡 Singapore SINGAPORE-SINGAPORE-6, EU TONG SEN STREET, #10-06, THE CENTRAL, SOHO-1, SINGAPORE 059817
Tel: +65 63233265
Email: ayemyo@lnz.com.sg
Web:

Premier Foods Holding Pte Ltd (PFH) is Singapore Based Company and Joint Venture Entity between Capital Diamond Star Group and Mitsubishi Corporation. PFH is doing Business and Investment Planning, Banking, Financial and Treasury Functions and International Market Development for Premier Coffee, the No.1 Coffee Brand in Myanmar. We export Premier & Happy Coffee & Tea Mix and Tea Master Tea Mix.

Mei Heong Yuen Food Industries Pte Ltd

8.2A4-02(11)

Address: 新加坡 Singapore 261 Pandan Loop, Singapore 128436
Tel: (65) 6779 1156
Email: adriankot@farmerpeanuts.com
Web: www.farmerpeanuts.com

Mei Heong Yuen Food Industries Pte Ltd is a leading Singapore food company specializing in the processing, packaging, distribution and export of food products under the established FARMER BRAND. We received the "Singapore Chinatown Heritage Brands" award in 2004. Our products are widely sold in Singapore and we also export to overseas ethnic Chinatown markets like Europe, USA, UK, Canada & Asia.

Unifood International (S) Pte Ltd

8.2A4-02(14)

Address: 新加坡 Singapore 44 Woodlands Terrace, Singapore 738458
Tel: +65 97667790
Email: jasmine.lin@unifood.com.sg
Web: www.unisoy.com.sg

Unifood International (S) Pte Ltd is the sole owner of UNISOY® Nutritious Soya Milk. Through strategic distribution and marketing efforts, UNISOY® has become the market leader in the Nutritious Soya Milk Powder category in Singapore.

OH CHIN HING SESAME OIL FACTROY

8.2A4-02(17)

Address: 新加坡 Singapore BLK 3017, BEDOK NORTH ST 5, SINGAPORE 486121
Tel: +6564813990
Email: info@ohchinhing.com.sg
Web: www.ohchinhing.com.sg

Established in 1920, Oh Chin Hing Sesame Oil Factory has been providing customers with quality products, indispensable to homes and restaurants, for more than 99 years, As a trusted manufacturer in Singapore. Oh Chin Hing Sesame Oil Factory is committed to producing 100% natural aromatic sesame oil of the highest quality.

TAI HUA FOOD INDUSTRIES PTE LTD

8.2A4-02(12)

Address: 新加坡 Singapore 619566-Singapore-NO 12 JALAN BESUT
Tel: +6562659911
Email: yimyee@taihua.biz
Web: www.taihua.biz

Tai Hua Food Industries was started in 1947 by its late founder, Mr Pek Cheng Chuan and has since grown from a small family business to become the market leader in the manufacture and distribution of soy sauces in Singapore. Its soy sauces and braising sauces are naturally brewed using only premium soya beans and other ingredients.

Four Seasons Durians

8.2A4-02(15)

Address: 新加坡 Singapore Singapore-Singapore-1 Senoko Ave, Singapore 758297
Tel: +65 64841619
Email: MarcusChanFSD@hotmail.com
Web: fourseasonsdurians.com

Four Seasons Durians established in 1998 specializes in manufacturing durian patisserie and supplying of fresh durians as well as white labeling pastries and baked products. Four Seasons Durians sucessfully pioneered the way for durians products and flavours to be mainstream. Four Seasons Durians's retail outlets are conveniently placed around Singapore including the new Changi Jewel Airport.

Grande Delta Pte Ltd

8.2A4-02(18)

Address: 新加坡 Singapore Singapore-Singapore-150 South Bridge Road #11-04 Fook Hai Building
Tel: 65352855
Email: lohzhenyang@grandedelta.com
Web: www.grandedelta.com

Grande Delta Pte Ltd is a Singapore based company specializing in commercial aquaculture and further processing of fish-based products. Recently, we launched our range of ready-to-eat fish skin snacks under the Delta Blue Brand. Our company is a fully integrated producer, capable of supplying quality products all year-round.

ACE SYNERGY INTERNATIONAL PTE LTD

8.2A4-02(20)

Address: 新加坡 Singapore #02-04, Woodlands Horizon-31, Woodlands Close,
Tel: +6567560286
Email: brand@acesyn.com
Web: acesynergyinternationalpteltd www.corniche.com.sg

Since 2006, Corniche has been exporting snacks and confectioneries to countries worldwide. We aim to deliver the joy of good quality and safe products that meets the quality assurances of countries like Japan, Singapore, Malaysia, China, the United States, Canada, Europe, Russia, Africa and Middle East and more.

FOODEDGE GOURMET PTE LTD

8.2A4-02(23)

Address: 新加坡 SINGAPORE-SINGAPORE-26 WOODLANDS TERRACE Singapore 26 WOODLANDS TERRACE
Tel: +65 63394953
Email: jsk@foodedgegourmet.com
Web: www.foodedgegourmet.com

Foodedge Gourmet has been a forerunner in Singapore's food services industry. Famous for its capability to mass customize appetizers all through to desserts, Foodedge Gourmet is a leading supplier of premium frozen food to restaurants, caterers, hotels and airlines. Our product categories include Ice Creams, Cakes, Breads, Soups, Sauces, Condiments, Cooked Meats, Cookies and lots more.

FORT SANCTUARY PTE LTD

8.2A4-02(26)

Address: 新加坡 Others-SINGAPORE-8 RAFFLES AVENUE #02-04 ESPLANADE MALL Singapore SINGAPORE-SINGAPORE-8 RAFFLES AVENUE #02-04 ESPLANADE MALL
Tel: +65 62548048
Email: kblau@fortsanctuary.com
Web: www.fortsanctuary.com

Fort Sanctuary has been producing some of world's finest teas from our facility in Tuas, Singapore, since 2014. After years of research, our cutting edge tea processing expertise is applied to best ingredients to deliver exquisite texture and full potential of tea leaves in terms of expression of terroir and flavor. Our work is showcased in Esplanade, a Singapore icon.

Kwong Cheong Thye Pte Ltd

8.2A4-02(21)

Address: 新加坡 Singapore Singapore-Singapore-12 Senoko Avenue
Tel: +65 67487766
Email: pauline@kctsoya.com
Web: www.kctsoya.com

广祥泰一步一脚印走过100年的岁月，不断致力于创新及改进现有的产品。
凭着丰富的传统技艺及食品制造业中所累积的丰富经验，广祥泰如今已成功晋升成为新加坡的酱油、面、月饼及酱料制造商。
广祥泰的愿景是成为国际公认、提供最佳产品质量的食品生产公司。我们将持续坚守、秉持高质量的产品口味和企业价值观，为所有顾客和消费者呈献品牌优良的传统精神。

Kwong Cheong Thye was established since 1977 in Singapore and set up a factory manufacturing soya sauce. Now with the business into its fourth generation Kwong Cheong Thye understands the need to constantly innovate and improve our products to cater to changing market demands. We have expanded beyond our original product line of Soya Sauce to Seasoning cooking sauce paste mooncake noodle Yusheng.

Chia Khim Lee Food Industries Pte Ltd

8.2A4-02(24)

Address: 新加坡 Singapore 119 Defu Lane 10 Singapore 539230
Tel: +6562856488
Email: enquiry@cklfi.com.sg
Web: chiakhimlee.com

Established in 1975,Chia Khim Lee Food Industries I food & Beverage conglomerate serving a global clientele. The company is firmly established in the manufacturing and distribution of its products in Singapore and overseas. Its flagship brand SAGIKO is offering more than 30 flavours and choices.

同掐食品工业私人有限公司 / Thong Siek Food Industry Pte Ltd

8.2A4-02(27)

Address: 新加坡 S(758044)-22 胜诺哥大道 Singapore S(758044)-22 Senoko Way
Tel: +65 67157993 分机号394 / +65 67157993 Ext 394
Email: boonsoon.ng@thongsiek.com
Web: www.thongsiek.com/cn

同掐食品工业（TSF）成立于1976年，是新加坡领先的优质鱼糜加工产品制造商和分销商，在全球20多个国家开展业务。TSF的工厂通过HACCP认证和欧盟许可。在2015年，TSF荣获得新加坡食品局（前AVA）颁发的金奖，确认了TSF连续15年获得食品卫生，环境卫生和生产卫生方面的“A”级评级。

Founded in 1976, Thong Siek Food Industry (TSF), a leading manufacturer, distributor from Singapore of quality surimi processed products, with a global presence in over 20 countries. Our plants are HACCP Certified and EU licensed. In 2015, we were awarded the Gold Award from Singapore Food Agency (ex-AVA) for achieving 15 consecutive years of 'A' grading in food hygiene, sanitation and processing.

Sacha Inchi Pte Ltd

8.2A4-02(22)

Address: 新加坡 Singapore Singapore-Singapore-2 Kallang Avenue, CT Hub #05-18, 339407
Tel: +6564960283 / +6562687227
Email: ginny.yap@panasian.com.sg
Web: incarich.com

Sacha Inchi Pte Ltd (The Company) was established in 2017, a 100% subsidiary of Pan Asian Holdings Ltd. Mr Richard Koh serve as the Director for the company and heads up the entire business operations in Singapore. It is 100% Singaporean entity and proudly made in Singapore product.

Tat Hui Foods Pte Ltd

8.2A4-02(25)

Address: 新加坡 SINGAPORE-Singapore-37 Quality Road Singapore Singapore-Singapore 618808-37 Quality Road
Tel: 62611010
Email: jerroldlim@tathui.com
Web: www.kokanoodles.com

Founded in 1986, Tat Hui Foods Pte Ltd manufactures high quality and tasty instant noodles, KOKA Noodles, and exports to over 50 countries in the world.

Singapore Business Federation

8.2A4-02(28)

Address: 新加坡 Singapore Singapore-Singapore-160 Robinson Road #06-01 SBF Center Singapore 068914
Tel: +6568276881
Email: jiawei.wong@sbf.org.sg
Web: www.sbf.org.sg

As the apex business chamber, SBF champions the interests of the business community in Singapore in trade, investment and industrial relations. SBF not only acts as the bridge between businesses and government to create a conducive business environment; But also represents the business community in bilateral, regional and multilateral fora for the purpose of trade expansion and business networking.

Chinatown Food Corporation Pte Ltd

8.2A4-02(29)

Address: 新加坡 Singapore 1 Senoko Road, Annex Building, #05-00, Singapore 758134
Tel: 6382 0500
Email: sales@chinatownfood.com.sg
Web: www.chinatownfood.com.sg

Chinatown Food (CTF) achieved highest accolade 'Platinum Award' by AVA for Excellence in Food Safety, today we are in 27th consecutive year of Grade 'A' Food Manufacturing Licence. CTF do not use preservatives, colourings, additives, flavourings in any of our products and CTF constantly innovate new variants to introduce to the market and keep up to tech by using the latest equipment available

城市沙爹食品有限公司 / City Satay (Food Industries) Pte Ltd

8.2A4-02(30)

Address: 新加坡 Singapore 486121-新加坡-3017 Bedok North Street 5 Gourmet East Kitchen #05-10 Singapore Singapore 486121-3017 Bedok North Street 5 Gourmet East Kitchen #05-10
Tel: +6564455369
Email: kmchow@bbqcity.com.sg
Web: www.citysatay.com

成立于1987年，城市沙爹在新加坡生产沙爹与各种烧烤食品已是老字号。我们工厂的设备与工作流程符合ISO 22000食品安全管理认证。客户可放心享用城市沙爹可口美味和优质的产品。

We are a manufacturer and supplier of Satay, Yakitori and various types of BBQ food, with a history that dates back to 1987. Our factories are designed with facilities and processes that are certified under ISO 22000 Food Safety Management System. Customers can be rest assured of great tasting and quality products from City Satay.

Mr Popiah Pte Ltd

8.2A4-02(31)

Address: 新加坡 Singapore Singapore-Singapore-15 Senoko Drive , JTC Food Hub , #03-06 ,758202
Tel: 92264548
Email: Lewistan.zm@mrpopiah.com.sg
Web: mrpopiahpteltd

Established in 1995, Mr. Popiah is one of the leading popular manufacturers in Singapore. Mr. Tan started Mr. Popiah with his wife at a humble coffee shop at Bedok North, Blk 136. Established in 1995, Mr. Popiah started out as a single stall at a Coffee Shop in Bedok that built a reputation for its great taste, value and innovative popiah creations.
Today, Mr. Popiah operates out of a 10,000 squ.

Younger (Singapore) Pte Ltd

8.2A4-02(32)

Address: 新加坡 Singapore Singapore-Singapore-15 Fourth Chin Bee Road
Tel: +86 514 87878600 / +65 62661822
Email: shen.zh@youngerfood.com enquiries@youngerfood.com
Web: www.youngerfood.com

扬可（新加坡）有限公司成立至今20多年。公司主要经营自有品牌同时及提供OEM贴牌服务，专业生产品类主要分为一、速冻米面制品（饺子、包子、糕点等），二、肉制品（肉干、肉松、香肠、火腿等），产品目前主要销往日本、新加坡、美国、澳大利亚市场，公司已通过中国质量认证中心（CQC）HACCP食品安全管理体系的认证，其中速冻饺子及包子已通过SGS的BRC食品安全全球标准。

We are a manufacturer, distributor, importer/exporter with more than 20 years in the food industry. Other than our own brand, we also provide full OEM services. Our production facilities in specialises in meat jerky, sausages/hams, RTE meats, and dim sums (dumplings and baos). HACCP (CQC), BRC (SGS) certified. Local distribution and export (Japan, Singapore, US & Australia).

Botani Pte Ltd

8.2A4-02(33)

Address: 新加坡 Singapore Singapore-Singapore-5 Mandai Link #01-06 Mandai Foodlink 728654
Tel: +65 9127 6905
Email: chris@botanispirits.com
Web: www.tanglin-gin.com

Botani Pte Ltd is the first Craft Distillery in Singapore, producing Singapore's first Craft Gin. We are 10 months old, and are developing a strong domestic market presence, seeing international demand, and have achieved Silver Medals at two International Wine and Spirits awards. Our Key Product is Tanglin Gin – the first Gin to be distilled in Singapore.

Unicorn Home Pte. Ltd.

8.2A4-02(34)

Address: 新加坡 Singapore 24 Raffles Place, #28-22, Clifford Centre
Tel: 96785898
Email: contact@unicorns.com.sg
Web: www.unicorns.com.sg

本公司通过优选世界各地的高品质农产品，并运用最先进的加工工艺来保留最新鲜的滋味和最丰富的营养，精心打造了“Fairy Port”这个优质食品品牌，立志为每个中国家庭提供安全，健康和有营养的高级食品，以帮助您和您的家人早日实现更健康更幸福的生活。

By selecting high-quality agricultural products from around the world and using the most advanced food processing techniques to preserve the freshest flavours and richest nutrients, our company has created "Fairy Port", a premium food brand that aims to provide safety, healthy and nutritional food to every Chinese family.

ASIA FARM F&B PTE LTD

8.2A4-02(35)

Address: 新加坡 Singapore SINGAPORE-SINGAPORE-211 WOODLANDS AVE 9 #07-77
Tel: 6568521535
Email: lhwong@asiafarm.com.sg
Web: www.asiafarm.com.sg

Asia Farm, is the leading drink manufacturer in Singapore, specialise in designing & creating unique beverages. Started our humble beginning in 08 August 1998, our commitment "dare to be different" and "simplify & go" make us to where we are today.
We believe our "positivity and passion" with our "constant improvement" will lead us to our vision.

F & G Food Pte Ltd

8.2A4-02(36)

Address: 新加坡 Singapore Singapore-Singapore-15 Woodlands Loop
Tel: 67541857
Email: tayab@fgfood.com.sg
Web: www.fgfood.com.sg

F&G食品有限公司成立于1995年，从2011年开始，已成为新加坡为数不多的高品质香肠和各种腊制肉类的领先制造商和分销商之一，良好的品牌和质量已经成为新加坡购物的首选。

New Peak Pte Ltd

8.2A4-02(37)

Address: 新加坡 Singapore 349326-Singapore-50 Kallang Pudding Rd #03-08
Tel: +6562942994
Email: william33ng@yahoo.com.sg
Web: arkonsingapore.com

Arkon was established in 2006 as a wholesaler and food manufacturer. Our main products are: Coral Seaweed Jelly, noodle, ginger tea, sauces.

Tastyfood Industries (S) Pte Ltd

8.2A4-02(38)

Address: 新加坡 Singapore 25 Bukit Batok Crescent #07-01 The Elitist Singapore 658066
Tel: +65 6266 0020
Email: xenn.lim@tastyfood.com.sg export@tastyfood.com.sg
Web: www.tastyfood.com.sg

We specialized in Ready-To-Drink & 3 in 1 Instant Beverage Powder Mix Products. Cereal. Soy. Coffee. Tea. OEM. Contract Pack.

HOUSE OF SEAFOOD (S) PTE LTD

8.2A4-02(42)

Address: 新加坡 Singapore SINGAPORE -SINGAPORE -171 KAMPONG AMPAT #06-09 KA FOODLINK S368330
Tel: 64449000
Email: FRANCIS@HOUSEOFSEAFOOD.COM.SG
Web: www.houseofseafood.sg

螃蟹之家成立于2008年，开业在短短时间内就凭一道螃蟹美食迅速走红并成为新加坡美食业的标杆。从当年杨厝港的第一家小店，现已扩展到新加坡，柬埔寨，马来西亚和中国的七家分店。今天，螃蟹之家以其新加坡风格的螃蟹以及对产品和服务卓越的承诺而享誉国际。
Established in 2008, House of Seafood is a household favourite and an icon in Singapore's seafood restaurant industry. Since setting up its first branch at Yio Chu Kang, House of Seafood has expanded to seven outlets in Singapore, Cambodia, Malaysia and China. Today, House of Seafood is internationally renowned for its Singapore-style crabs and its commitment to product and service excellence.

Golden Sunland Singapore Pte Ltd

8.2A4-02(45)

Address: 新加坡 Singapore Singapore-Singapore-100 Beach Road, #33-01, Shaw Tower
Tel: +6588110555
Email: Sales.SG@GoldenSunland.com
Web: goldensunland.com

Golden Sunland is Singapore's first hybrid rice developers and growers, successfully operating from seed to harvest. We are the first private foreign company to operate in Myanmar, improving our farmers' livelihoods.

Tatgu Pte Ltd / Tatgu Pte. Ltd.

8.2A4-02(39)

Address: 新加坡 Singapore -Singapore -10 Ubi Crescent #06-29, Ubi Techpark (Lobby B), Singapore 408564 Singapore Singapore -Singapore-10 Ubi Crescent #06-29, Ubi Techpark (Lobby B), Singapore 408564
Tel: +65 6747 1008
Email: tina.tan@tatgu.com
Web: www.tatgu.com

TATGU生产出高品质，健康的巧克力。产品是从优质可可和使用最先进的创新食品技术。甘蔗100%衍生制定。独特的低血糖升成指数配方给平稳感官特性，糖尿病患者可享用巧克力对健康的益处，而不过度吃食糖有关不良影响。85%纯度黑巧克力含高可可，低苦味。糖白巧克力含钙质，低糖同时保持甜度效力。
Tatgu OFFERS quality healthy chocolate & chocolate products that serve the health-conscious. Products formulated from premium cocoa & 100% sugarcane derivative using state-of-the art Innovative Food Technology. LOW Glycemic Index formulation give smooth sensory profile. Diabetic-friendly & allows people to enjoy health benefits of chocolate without negative effects of sugar.

SUNFRESH SINGAPORE PTE LTD

8.2A4-02(43)

Address: 新加坡 Singapore 25 Chin Bee Avenue
Tel: +65 6268 7254
Email: risa@sunfresh.com.sg
Web: www.sunfresh.com.sg

SUNFRESH is an established fruit juice manufacturer, producing for institutional and retail clients throughout the Asia Pacific region and beyond. We serve our premium fruit juices to clients in the airline, hotel, catering and restaurant sectors. From our production facilities, we manufacturer a broad range of fruit juices from freshly squeezed to blended fruit juices.

Happy Wellness PTE LTD

8.2A4-02(46)

Address: 新加坡 Singapore 1002 Tai Seng Avenue #01-2552 Singapore 534409
Tel: +65 67479701
Email: guopei.loh@gmail.com
Web: www.lyt.sg

新加坡中藥材商行起家，百年企業的守護承諾。創辦人陳兆嘉老先生為知名燕窩專家，源起至1937年新加坡珍珠坊的頂級中藥材商行-正大參行，是新加坡少數頂級藥材及燕窩供應商之一，貿易網絡行銷全球，至今已超過八十年歷史。時日至今除了燕窩產品之外，研發出各種專業養生食補產品，並信守80年歷史老字號的品牌承諾，以「輕鬆養生 • 健康人生」為宗旨，陪伴守護您一輩子的健康。
Easy wellness leads to healthy life, our core belief when we create our brand Lau Yuen Tong; which traces its roots back to 1937, when 正大参茸行 (Jing Tai Hong) was established in Singapore.
We listen to our customers to understand their needs and create high quality products in convenient formats to fulfill easy wellness, healthy life.

Zuzen Food Pte Ltd

8.2A4-02(40)

Address: 新加坡 Singapore Others-Singapore-No. 24 Jurong Port Road #01-03
Tel: 62657922
Email: yamazakiseiga.export@gmail.com
Web:

Agent for An Innovative & Responsive Direct Manufacturer of an Assortment of Quality Cakes that caters to different customers requirements and market needs.

Fitrohealth Pte Ltd

8.2A4-02(44)

Address: 新加坡 Singapore Singapore-Singapore-68 Circular Road #02-01
Tel: 81282630
Email: darren@fitrohealth.com
Web: www.fitrohealth.com

Fitrohealth is a health supplement company proudly incorporated in Singapore, with a focus on innovative and sustainable nutritional solutions for the Asian population. We have over 20 years of expertise in this field and have offices in Singapore and China.
Our Mission is to provide Asian consumers, particularly the younger generation, with high quality USA & Singapore made products.

上好佳(国际)有限公司 / Liwayway(International) Company Limited

8.2A4-03

Address: 香港地区 菲律宾开曼岛 Philippines Cayman island
Tel: 021-59898530
Email: fujie_glg@oishi-tm.com
Web: www.oishi.com.cn

Liwayway International Group is a pan-Asian group of snack food companies owned and controlled by the family of Mr. Carlos Chan. The Group manufactures the Oishi brand of snack products. The group's growing product line consists of various products/brands of salty snacks, potato chips, cereals, popcorn, cookies, juice concentrates and powdered juices.

Unilever Asia PTE LTD

8.2A4-04

Address: 新加坡 Singapore Singapore -Singapore -#06-22 Mapletree Business City, 20 Pasir Panjang Road
Tel: +86 21 22128211
Email: Jessica.Wang@unilever.com
Web: www.unilever.com

联合利华是世界领先的家居护理,美妆和个人护理、食品、茶和冰淇淋产品的供应商之一，旗下拥有400多个品牌，产品畅销全球190多个国家和地区。每一天全球有25亿消费者使用我们的产品。2018年全球销售总额达510亿欧元，其中超半数的业绩来自发展中国家和新兴市场。
Unilever is one of the world's leading suppliers of Beauty & Personal Care, Home Care, and Foods & Refreshment products with sales in over 190 countries. On any given day, 2.5 billion people use Unilever products to feel good, look good and get more out of life – giving us a unique opportunity to build a brighter future.

MAYORA GROUP

8.2A5-02

Address: 印度尼西亚 Indonesia DKI Jakarta-Jakarta-JL.Daan Mogot KM.18, Cengkareng
Tel: (86-021)58121130
Email: meita.chen@youyijia-sh.com
Web: www.mayora.com

Mayora Group is a recognized global company in the Fast Moving Consumer Goods industry. Our diverse products can be divided into 8 categories: biscuit, candy, wafer, chocolate, coffee, instant food, beverage and cereal. Among our well-known brands are Kopiko, Danisa, Teh Pucuk, Roma, Energen, Torabika, Beng Beng and many more.

MED INTERNATIONAL IMPORTACION EXPORTACION, S.A.

8.2A5-03(04)

Address: 西班牙 Spain Andalucía-Córdoba-Calle Mirabueno, n° 22. 14012
Tel: 15601881171
Email: yanyan.peng@med-int.com
Web: www.med-int.com

MedInternational founded in 1999 in the heart of Andalusia, started as a premium extra virgin olive oil producer. Our main business is the production and export of extra virgin olive oils. We are members of a major Spanish GPO (Group Purchasing Organization) and distribute our own brand ALTEZA worldwide, which represents a range of more than 1000 references of grocery products.

CJ

8.2A4-05

Address: 韩国 ROK(Republic of Korea) SEOUL-CJ CHEILJEDANG CENTER. 330, DONGHO-RO, JUNG-GU
Tel: 021-5329-2351
Email: je.park1@cj.net
Web: www.cjchina.net

国际生活文化企业CJ为顾客创造健康快乐和便利。CJ以食品&餐饮服务，生物科技、娱乐&媒体、新流通等四大核心业务部门为轴心，努力实现"创造健康、快乐和便利的全球化生活文化企业"的目标。
CJ的Blossom形象在传递企业价值的同时，象征着CJ如花朵般向世界市场和顾客"绽放"，意指随时以崭新、亲近的面貌走向顾客的企业。
CJ, the world's foremost lifestyle company, creates customers' health, happiness, and convenience. CJ strives to fulfill its mission as the global lifestyle company that creates health, happiness, and convenience' with four core business divisions such as Food & Food Service, Biotechnology, Entertainment & Media, and New Distribution.

西班牙猪业联盟 / INTERPORC SPAIN

8.2A5-03(02)

Address: 西班牙 马德里-马德里-Marqués de Urquijo大街 Spain MADRID-MADRID-MARQUES DE URQUIJO 10 2ND LEFT
Tel: +34 911610059 / +34911610059
Email: internacional@interporc.com
Web: www.interporcspain.org

西班牙猪业联盟是非盈利的跨行业组织，代表了西班牙白猪生产、加工和销售全产业链。
西班牙猪业联盟的主要工作是为西班牙白猪行业提供服务并开展有利于整个产业链发展的各种活动。
INTERPORC SPAIN is a non-profit entity that represents the entire Spanish white pork sector, including its production, industrial processing and marketing.
The foremost objective of INTERPORC SPAIN is to serve as a useful instrument for the entire white pork industry.

COMERCIAL CHOCOLATES LACASA, S.A.

8.2A5-03(05)

Address: 西班牙 Spain Aragón-Zaragoza-Carretera Logroño, Km 14. 50180 Utebo
Tel: +34 925 180 258
Email: jaranda@chocolateslacasa.es export@lacasa.es
Web: www.lacasa.es

Spanish chocolate producer

VICSTOCK GRAIN / VICSTOCK GRAIN PTY LTD

8.2A5-01

Address: 澳大利亚 WA-Perth-173 / 580 Hay St Australia WA -Perth -173 / 580 Hay St
Tel: +61386442677
Email: agroallianceaus@gmail.com
Web: www.vicstockgrain.com.au www.vicstockgrain.com.au

VSG是一家澳洲专业的农场经营管理公司，拥有自己运营管理的土地与码头，提供大宗谷物(小麦，大麦，油菜，燕麦草等) 产品的种植，管理，出口等。从源头做起，为 海外客户提供保质保量的产品供应。
Main grain grower and business in Australia, have own 100,000ha land for cropping and own port for exporting. Full supply chain to help grain from cropping to export business.

BODEGAS FAUSTINO, S.L. / GRUPO FAUSTINO

8.2A5-03(03)

Address: 西班牙 Spain País Vasco-Álava-Carretera Logroño, s/n. 01320 Oyón-Oion
Tel: +34 945622500
Email: ppico@bodegasfaustino.es
Web: www.grupofaustino.es

Grupo Faustino is a prestigious family group founded in 1861, owning some of the most recognized and leading export brands. It is a fourth generation family business and an undisputed leader in Rioja DOCa Gran Reserva category. The Group has seven wineries located in key Spanish designations of origin though most of the winemaking activity is concentrated in the DOCa Rioja.

JORGE PORK MEAT, S.L.U.

8.2A5-03(06)

Address: 西班牙 Spain Aragón-Zaragoza-Avenida Academia General Militar, nº 52. 50015
Tel: +34 976514029
Email: teresarecaj@jorgeporkmeat.com
Web: www.jorgesl.com

Grupo Jorge is one of the largest meat companies and has been part of the pork sector for more than 75 years. It exports to more than 80 countries worldwide, including China, Japan and Canada. It covers the whole production chain of the pig industry, which is covering from genetics to final sales.

BODEGAS SAN VALERO, S.C.

8.2A5-03(07)

Address: 西班牙 Spain Aragón-Zaragoza-Carretera N-330, Km 450. 50400 Cariñena
Tel: +34 976620400
Email: rsantolaya@sanvalero.com
bsv@sanvalero.com
Web: www.sanvalero.comm

Bodegas Sanvalero.
At Bodegas San Valero (BSV), tradition and innovation go hand in hand in the production of a wide range of wines surprising every vintage.
BSV is formed by Bodegas San Valero, belonging to the Denominación de Origen Protegida Cariñena (Protected Designation of Origin), and Bodegas Gran Ducay, belonging to the Cava Regulatory Board.

CARNICAS FRIVALL, S.L.

8.2A5-03(11)

Address: 西班牙 Spain Comunidad de Castilla - La Mancha-Cuenca-Carretera Nacional 420, Km 424,6. 16196 Villar de Olalla
Tel: +34 973 205 531
Email: ldonate@vallcompanys.es
Web: www.patel.es

Patel is one of the leading brand in frozen pork supply in China market, three diffirent slaughter house belong to Patel brand, in Spain.

MARKETING Y COMERCIO INTERNACIONAL, S.A.

8.2A5-03(15)

Address: 西班牙 Spain La Rioja-Logroño -Cameros nº 8
Tel: +34 941236612
Email: marketing@ecodiet.com
Web: www.ecodiet.com

Marketing & Comercio Intenational s.a, is a Spanish company that distributes food products "Los Corrales de la Sierra" And wines under "Peñazul". All our premium quality products

SINTESIS INTERNATIONAL FRUIT, S.A. / SINTESIS INTERNATIONAL FRUIT, S.L.

8.2A5-03(08)

Address: 西班牙 Spain Andalucía-Sevilla-Avenida República Argentina, nº 11, piso 8 D. 41011
Tel: +34 670672888
Email: sadnot@hotmail.com
Web:

自1968年由两位不甘于平凡，富有远见的农民一起创业，经过1973年Primor品牌创立，至2013年成立SAT SINTESIS。我们是西班牙主要生产商之一，以自有生产品牌Primor乐橙进行市场销售，主要产品包括柑橘类和核果类水果，年平均采摘量达48,000吨，业务遍及欧洲、加拿大、中东等区域。
SAT SINTESIS is one of the main groducer in Spain, with an annual production exceeding 48000 tons. The company specialized in fresh stone fruits and citrus. We sell in Europe, Canada, the Middle East and other regions.

DEOLEO SA

8.2A5-03(12)

Address: 西班牙 Spain Madrid-Rivas-Vaciamadrid-Parque Empresarial Rivas Futura. Calle Marie Curie, 7 (28521)
Tel: 155 3827 8821 / +86 155 3827 8821
Email: alberto.diaz@deoleo.com
Web: www.deoleo.com

Deoleo是世界首要的橄榄油生产商，业务遍及五大洲80多个国家。我们在西班牙的安达卢西亚地区和意大利的托斯卡纳地区设有工厂，我们凭借着屡获殊荣的橄榄油品牌引领行业，如Carbonell（康宝娜），Hojiblanca（白叶）和意大利品牌Bertolli（贝多利）和Carapelli（卡拉佩利）。
Deoleo is the world's leading olive oil producer, present in over 80 countries on the five continents. We have factories in Spain and Italy and we lead the industry with our range of award winning olive oil brands, such as the Spanish brands Carbonell and Hojiblanca and the Italian brands Bertolli and Carapelli.

INVERSIONES EUROGO, S.L. / INVERSIONES EUROGO, LTD.

8.2A5-03(16)

Address: 西班牙 Madrid-Madrid-Calle Sierra Toledana, nº 8. 28946 Fuenlabrada Spain Madrid-Fuenlabrada-Calle Sierra Toledana, nº 8.
Tel: +34 666762411
Email: info@visionspainchina.com
Web: www.visionspainchina.com

中西视界总部位于西班牙马德里，是中西贸易、科技、人才、教育、旅游等领域交流合作专家，在西班牙及欧洲拥有众多高端优质资源，致力于链接中西优势资源及产业，推进产业链、价值链中西配置，并以产业引导资金投放、人才集聚和拉动经济增长，推动经济高质量发展。

2 OPEN EU CN, S.L.

8.2A5-03(10)

Address: 西班牙 Spain Extremadura-Cáceres-Calle Sierpes, nº 3. 10003
Tel: +34 911 516900
Email: luis@2open.biz
Web: www.2open.biz

We offer a full range of ecommerce services that are all you need to sell online in China.

EUROAIGOU,S.L. / Eurocaigou, S.L.

8.2A5-03(13)

Address: 西班牙 马德里-马德里-阿列尔街4号 Spain Madrid-Madrid-Calle Ariel, nº 4, planta A, piso 2 A. 28045
Tel: 0086-578 6899889 / +86 5786899889
Email: eurocaigou@hotmail.com
Web: www.qtmacro.com

Eurocaigou有限公司成立于2016年，是一家专业从事西班牙产品进口和销售的企业。公司总部位于西班牙马德里，在浙江，山东以及北京都有分部。公司主要经营的产品为红酒，火腿，橄榄油，葵花籽油，目前全国独家代理特鲁斯，卡利萨庄园，巴布洛，乌提尔山脉，托莱翁等知名品牌。
Eurocaigou is founded in the year 2016, with its headquarter in Madrid, Spain, is a company dedicated to the import and distribution of products from Spain. Its main products include wine, ham, olive oil, sunflower oil, etc., and it is the exclusive agent in China of several import Spanish brands including Trus, Dehesa del Carrizal, Pablo, Sierra de Utiel, Torreón.

ZAO "MERCURY"

8.2A5-04(03)

Address: 俄罗斯 Russia 156a, Strait Lenin, Region Banauer, Altai Border
Tel: / / 0089609641234
Email: bocharnikova@22brn.ru
Web:

ZAO "Mercury", a member of Siberian Export Union of Suppliers (SEUS), specializes in the production, processing and trade of agricultural products from the Altai Territory and other regions of Siberia. The company business is focused on the wholesale of agricultural products.
The geography of our deliveries is constantly expanding. Today, our products are shipped all over the world.

"GURMANOV" LLC

8.2A5-04(04)

Address: 俄罗斯 Russia Ulyanovsk-2nd Mira Lane, 24
Tel: 8 (800) 200-13-39
Email: desert@bettyscake.ru
Web:

We are a manufacturer of premium desserts from Russia. For whom: cafes, restaurants, shops, delivery service. Advantages: desserts are divided into portions-they are convenient to eat, defrost and sell. A popular dessert with high demand all over the world. Convenient weight and packaging from 100 to 2000 grams. Our desserts are made only from natural ingredients: cream cheese, milk, butter, eggs.

LTD TOMSK PRODUCTION COMPANY SAVA

8.2A5-04(07)

Address: 俄罗斯 Russia Tomsk-Kuzovlevskoe teplichnoe hozyaistvo, bldg.7
Tel: +7 3822 609-725
Email: nea@tpksava.ru
Web:

The company "SAVA" specializes in the production and sales of food products made from wild plants that grow in Siberia and the Altai Territory: wild and garden berries, mushrooms, pine nuts and various kinds of herbs. It is engaged in the development and production of functional food and special dietary food for those people who work in hazardous conditions.

OPERATING COMPANY RUSBIOALLIANCE LLC

8.2A5-04(10)

Address: 俄罗斯 Russia Moscow-Novoslobodskaya Street, 41
Tel: 874999957565
Email: ekaterina.sorokina@rusbioalliance.com
Web:

«RusBioAliance» is a producer and distributor of wild berries and mushroom, cultivated berries, fruits and vegetables products. Only the best raw materials from 10 ecologically clean regions of Russia are used for the manufacturing of the products of the "RusBioAlliance". The products of the company are certified according to the international standards Organic, Kosher and Halal.

SIBPRIBOR LLC

8.2A5-04(05)

Address: 俄罗斯 Russia 664047, Office 204,87. Trilisser Street, City Irkutsk
Tel: +7 (3952) 530303
Email: usoltceva@baikal-legend.ru
Web:

«SIBPRIBOR» Llc under the brand name "Baikal Legend" produces two high-tech natural products: "BioChaga" and "BioDihydroquercetin"in the city Irkutsk, Russia.
The Products are registered as dietary supplements and are sold in Russia, United Arab Emirates, Europe through pharmacy chains, medical centers and specialized retail outlets.

TRADE HOUSE BAZER

8.2A5-04(08)

Address: 俄罗斯 Russia 36 Krylova str., office 122, Novosibirsk, 630005, Russia
Tel: /
Email: erkovich@exponsk.ru
Web:

LLC TD BAZER – is a dynamically developing company specializing in export of the natural flower organic honey produced in Siberia and in Altai Krai.
Experience of the organization and holding annual specialized honey fairs, allows to choose among the existing variety and to offer the consumer the product meeting high requirements of quality.

RESOURCE GROUP OF COMPANIES

8.2A5-04(13)

Address: 俄罗斯 Russia Moscow-Bolshoy Savvinskiy Lane 11
Tel: +7 495 741 70 21
Email: m.guseva@gap-rs.ru
Web:

The Resource Group of Companies is one of the largest poultry meat manufacturers and poultry meat exporter number one in the Russian Federation.
Diversification and vertical integration of our activity areas, as well as a number of distinctive features, guarantee competitive position and financial security of the Resource Group of Companies.

"POLE" LLC

8.2A5-04(06)

Address: 俄罗斯 Russia Novosibirsk-12 Razyezdnaya st., office 202
Tel: +7 (383) 373-21-81
Email: 37@pt.sale
Web:

OOO «Pole» – is a young, rapidly developing company that specializes in production and distribution of premium class mineral water under the trademark of Petroglyph®. Company was founded in 2015.
At present we do not have a branch in China and we are looking for distributors in order to expand our export. Our water has been certified for China in accordance to the Chinese standards.

10 MED LLC

8.2A5-04(09)

Address: 俄罗斯 Russia Gorodskoy Okrug Istra-Anosino-Tenistaya st, 2
Tel: 84951506680, 100
Email: dc182@mail.ru
o.kutorovich@10med.com
Web: www.10med.com

10 MED is a Russian manufacturer, supplier and distributor of natural foods, sweets, national products, medical devices and parapharmaceuticals with headquarters at Moscow region, Russia.

"SLAVNYY MED" LLC

8.2A5-04(14)

Address: 俄罗斯 Russia Primorye Territory, -Vladivostok-Narodny prospekt, 20
Tel: 79089945220
Email: ak5@list.ru
Web:

The company "Slavnyy med" was established in 2016 and has rapidly gone from a young company to an expert in the field of honey production. Today, our company occupies a leading position in the field of export of honey to the countries of Southeast Asia, enjoys well-deserved trust of its customers and a good business reputation among Russian and foreign partners.

LLC "MUSIKHIN. WORLD OF HONEY"

8.2A5-04(17)

Address: 俄罗斯 Russia Orenburg-Salmyshskaya St., 14
Tel: 8 800 555 33 56 / +7 499 505 50 72
Email: sklad@mirmeda.ru
Web: www.mirmeda.ru

"Musikhin. Mir Meda" Company began its activity in 2000. The products have been numerously awarded with the winner's diplomas and certificates on different festivals, competitions, exhibitions.
Honey produced by "Musikhin. Mir Meda" Company is a wholesome and tasty gift which your nearest and dearest will be happy to receive.

CF BOGATIRE

8.2A5-04(19)

Address: 俄罗斯 Russia Moscow-ulitsa Konstruktora Guskova, 8c10 Zelenograd
Tel: 79265318951
Email: mahortov@bogatire.ru
Web:

Confectionery factory «Bogatyr» was founded in 1996, and today it is a modern Moscow enterprise with a wide range of confectionery:
Caramel
Sweets based on nougat and soft caramel
Cereal Sweets
Fruit Bars and Sweets
Cream and jelly sweets
Explosive Caramel Candies
Muesli Bars and Sweets
Chocolate and pastry tiles

FROZEN FOOD LTD

8.2A5-04(20)

Address: 俄罗斯 Russia 143581 Russia, Moscow region, Istrinsky district, village Leshkovo, Pavlo-Slobodsky s.o., 210
Tel: 0089646274532 / +7 (495) 580-70-80
Email: vereina_mv@agama.info
Web:

AGAMA was founded in 1998.The company's main goal is to create products of exceptionally high quality that will help consumers worldwide live a healthy lifestyle every day. AGAMA believes that fish and seafood are the most important components of proper nutrition.For 20 years, company's efforts have been appreciated by the Russian consumer.

JSC ASTON

8.2A5-04(22)

Address: 俄罗斯 Russia 344002,3b First Lugowaya, Rostov-Don River, Russian federation
Tel: +7 (863) 2618141
Email: selimkhanova_a@aston.ru
Web:

For more than 20 years, ASTON has been one of the largest Russian manufacturers of foods and food ingredients. ASTON is a leading exporter of vegetable oils and Russian grain, the leading processor of oilseeds.
ASTON products are vegetable oils, special fats for the food industry, ingredients for the production of animal feed.

LLC BELYOV CONFECTIONARY COMPANY

8.2A5-04(24)

Address: 俄罗斯 Russia Tula-Moskovskaya ulitsa, 17
Tel: +7 (985) 770-87-87
Email: pastila1881@yandex.ru
Web:

Belyov pastila Natural handmade product, made according to an ancient Russian recipe at the renewed factory of merchant A.P.Prohorov – the founder of industrial production of pastila in the Belyov city.
Belyov pastila made of only three components: baked in wood stove apples, egg white and sugar.

JSC TOMSK MILLS

8.2A5-04(26)

Address: 俄罗斯 House 40, Street Mellnichnaya Russia House 40, Street Mellnichnaya, City Tomsk
Tel: /
Email: nachsbyt@tomskmills.ru
Web:

For over 100 years, Tomsk Mills has performed a simple and everlasting business – they provide flour for bread baking enterprises without interruption. Product quality conforms to international standards and has been awarded the highest awards.
The best technologies of grain processing, modern equipment and impeccable reputation on the market are a guarantee of success of the enterprise.

KRASNODAR TEA UNION LTD

8.2A5-04(27)

Address: 俄罗斯 Russia Krasnodar-Moskovskaya ulitsa, 42к13
Tel: 8-903-642-02-59
Email: marketolog@dansonia.ru
Web:

«Krasnodar Tea Union» LLC produces and sells tea under the "Krasnodarsky tea" TM. Krasnodarsky tea– the name refers to all teas produced in Sochi, Krasnodar Region, Russia since the end of the XIX century. The range is represented by the most popular types of tea.

JSC BELORECHENSKOE

8.2A5-04(29)

Address: 俄罗斯 Russia 147, Usolsk District, Bellorichensk, Irkutsk, Russia 665479
Tel: /
Email: 744403@gmail.com
Web:

Agricultural enterprise "Belorechenskoye" is 45 years old company that has accumulated vast experience and established its own raw material base.
We produce our own feed material for the entire livestock, which allows us to control the production at all stages. Thus, guarantee top quality of the final product.

VERESK HOLDING COMPANY

8.2A5-04(30)

Address: 俄罗斯 Russia 171640, Building 49, Street Lenin, Kashin,Tver region,Russian Federation
Tel: 8 (48234) 2-07-10
Email: perin@veresk-alko.ru
Web:

Veresk holding company is a dynamically developing enterprise leading in the ratings on the efficiency dynamics and releasing high-quality products of demand presented in the majority of Russian chain stores. This distillery produces drinks, which becomes legends. These include the famous "Tver Bitter" liquor and "Old Kashin" balm.

LLC "VTK" AKULCHEV"

8.2A5-04(31)

Address: 俄罗斯 Russia 423800, 32 Poligraficheskaya St., Naberezhnye Chelny, Tatarstan, Russia
Tel: 008 800 700 19 95
Email: ibragimov@akulchev.com
Web:

Akulchev Group of companies is one of the leading manufacturers of soft waffles and cookies in Russia. We are the first and the only one in Russia who has automatic line for French recipe macarons production.

LLC TH "SWEETS FACTORY"

8.2A5-04(33)

Address: 俄罗斯 Russia 452774, Republic of Bashkortostan, Tuimaji District, 8b Lenin Street, Subankulovo
Tel: / / 0089174331318
Email: director@laycy-queen.ru
Web:

"Sweet factory". Started her work in 2000. A well-coordinated team and wise management have implemented a unique development concept. While maintaining the warmth of manual production, the factory uses the most modern technologies. Various bakery products are made only of the highest quality and natural ingredients.

LLC "CONFECTIONARY PLANT SLASTI"

8.2A5-04(34)

Address: 俄罗斯 Russia 16a, Golosova street, Togliatti, 445035 Russian Federation
Tel: /
Email: anton.konotop@slasti.com
Web:

Confectionery plant SlaSti traces its history to 1953 when it was built as a main food factory of the city.
Since new investors came in 1999, the factory has been annually upgraded and has constantly expanded its assortment.
As for today LLC "Confectionery plant SlaSti" produces wide range of chocolate glazed candies, fondant candies, hard-candies, marshmallow souffle, dragee & sherbet.

"AMURAGROCENTER" LLC

8.2A5-04(35)

Address: 俄罗斯 Russia Blagoveschensk-Amurskaya ulitsa, 17c1
Tel: 8-962-285-42-15
Email: export@amuragro.ru
Web:

Amuragrocenter Ltd., is the largest enterprise processing grains and beans in the Far East of Russia, which includes the following production facilities: soybeal oil, soybean meal, lecithin, soy flour, soybean fiber etc. All production is certified and meets the standards requirements. Since 2012, our company has been export its products to the China.

IE ENTINA T.G. (PERONI HONEY)

8.2A5-04(36)

Address: 俄罗斯 Russia 115463, Russian Federation Moscow City General Belov. 16-2
Tel: +7 (495) 133-87-03
Email: roman@peronihoney.ru
Web:

IE Entina T.G. (TM PERONI) is a leading manufacturer of a unique product, delicacy and goodies – honey-soufflé. Our three main principles are Natural, Tasty, Beautiful! We use modern European equipment, approved and certified by international technologists, and strictly monitor the quality of raw materials and products at all stages of production and packaging.

JSC "DIADAR"

8.2A5-04(38)

Address: 俄罗斯 Russia Moscow-Staropetrovsky Drive, 7Ac25
Tel: +7(495)785-55-23
Email: krupnitskaya@diadar.ru
Web: www.diadar.ru

Our mission is to make healthy food tasty and affordable for everyone. Using innovative technologies and modern trends today, we care about what you will eat tomorrow.
For more than 20 years, we have been developing the market for proper nutrition in Russia and abroad.

RUSSIAN EXPORT LLC

8.2A5-04(40)

Address: 俄罗斯 Russia Moscow-Yevropy Square, 2
Tel: +79258301963
Email: i.shishkanov@dakaitaowa.ru
Web:

DAKAITAOWA was created for exporting Russian food to China through online and offline sales channels.
Our company allows manufacturers from Russia to enter the Chinese market without creating their own logistics and warehouse infrastructure.
Our company owns the first Chinese electronic trading platform for trading of Russian food with 100% Russian investment DAKAITAOWA.COM

AGROHOLDING "GOODWILL"

8.2A5-04(42)

Address: 俄罗斯 Russia Altai territory-Sovetskoye village-Altaisky pereulok, 21
Tel: 89236561112
Email: 9236561112@goodwill-tm.ru
Web:

Agroholding "Goodwill" is one of largest producers in Russia. The Company was founded in 1998. It is located in Siberia, Altai – ecological region of Russia and ideal place for growing grain with its abundant sunshine and rain, and mild climate.
Products under the brand "Goodwill": oat flakes for healthy food, different cereals and groats, baker's heat flour.

LLC "EXPOTORG"

8.2A5-04(43)

Address: 俄罗斯 Russia 440015, 12, State Sovhoznaya, Benza, Russia
Tel: 008(8412) 90-93-85
Email: sale5@rusprod58.ru
Web:

We produce a large range of products including cookies, cakes of long-term storage under the trademark «Boniposi» (like the Spanish pie) and traditional range of marshmallow, marmalade, biscuits, sugar, oat biscuits, cakes, complex biscuits, condensed milk and others. Our production involves more than 16 years experience , modern equipment, high productivity of foreign production.

LLC "TD CHERKIZOVO"

8.2A5-04(44)

Address: 俄罗斯 Russia 125047 Lesnaya street 5, bld. B, Moscow, Russia
Tel: +7 495 775-05-50
Email: export@cherkizovo.com
Web:

Cherkizovo Group is the largest meat producer in Russia. The Group is a top-3 producer in each of the Russian poultry, pork and processed meat markets. Cherkizovo Group encompasses nine full cycle poultry production facilities, sixteen modern pork production facilities, six meat processing plants, nine feed mills and around 287,000 hectares of agricultural land.

LIVE COFFEE LLC

8.2A5-04(45)

Address: 俄罗斯 Russia Moscow -Volokolamskoe highway, 1-1- VI-30a
Tel: 89150110069
Email: nika77k@yandex.ru
Web:

The Live Coffee Company – Russian manufacturing company established in 2005.
The main rule and competitive advantage is the consistent quality of the product.
Careful control of all stages of production, in order to provide maximum benefit and convenience to our customers and partners.

TAMBOVSKY BECON LTD

8.2A5-04(46)

Address: 俄罗斯 Russia Moscow-35, Valovaya street,
Tel: 79099236777
Email: kotinain@mbnrs.ru
Web:

Rusagro Group is the largest vertically integrated agriculture industry holding company in Russia. Geography of Rusagro sales is constantly growing. Currently the Company sells products in more than 80 regions of Russia and more than 15 countries abroad. High-quality products, the best servicing to the clients, efficient responsiveness and reliability.

JSC "DMITROVSKIY MOLOCHNYI ZAVOD"

8.2A5-04(49)

Address: 俄罗斯 Russia Moscow-Ryabinovaya Street, 26
Tel: +7 800 333 88 22
Email: ea_ershova@dmz.ru
Web:

Joint Stock Company «Dmitrovskiy molochnyi zavod» is one of the oldest Russian enterprises, which carefully keeps the traditions and successfully develops.
TM Svetlogorie is a multiple winner of international food exhibitions and has repeatedly been highly awarded.
All TM Svetlogorie products are made exclusively from natural raw materials and ingredients.

LLC "CF TORERO"

8.2A5-04(50)

Address: 俄罗斯 Russia Paveleckaya Naberejnaya, 2, build. 5. 115114 Moscow, RUSSIA
Tel: +7(499) 553-48-98
Email: gor.stepanyan@torero.ru
Web:

Torero was founded in Moscow in 2000. Our production took off quickly, and in 2008 we decided to expand our operations to Tula. Flexible logistics solutions allow us to satisfy the demands of our partners quickly and effectively. Our production site has its own warehouses to dispatch products to customers. The assortment of Torero products exceeds 300 goods.

GLAZURPROM LLC

8.2A5-04(51)

Address: 俄罗斯 Russia Kaliningrad Region-Svetly-ulitsa Krzhizhanovskogo, 5
Tel: +78312725111
Email: taturina@glazurprom.ru
Web:

The Group of Companies "GP" is located in the smallest region in the West of Russian Federation – the Kaliningrad region. During the period of its development, the "GP" factory has passed an intensive way – from the production of confectionery and chocolate glaze for the needs of manufacturers of chocolate products to the final product under its own brand "GP".

LLC KORONA-FOOD

8.2A5-04(52)

Address: 俄罗斯 Russia 141400, Moscow region, Khimki g, Northern passage, building 1
Tel: +7 495 118 08 88
Email: hasanova@mr-food.ru
Web:

Our factory is based in Moscow in 2009 and occupies 10000 sq.m. We produce more than 500 SKU with daily production 30 tons in ready to eat and frozen categories (salads, soups, breakfast, lunch, snacks and desserts). Our production is certified according to the international food safety standards FSSC2200, HACCP, and we are approved supplier by Yum, McD, BK,

INDIVIDUAL ENTREPRENEUR AMIRHANOV I.I. / U ICE CREAM FACTORY

8.2A5-04(53)

Address: 俄罗斯 Russia Khabarovsk-ulitsa Kirova, 1
Tel: +7 4212 45-80-70
Email: boss@zaicarf.ru
Web: www.zaicarf.ru

Our Ice Cream Factory «ZAICA» has existed for over 15 years, during that time the team has developed 48 flavors of ice cream, of this amount 30 flavors is in constant production. Each year the company wins prizes in the regional competition «Khabarovsk brand», but the greatest reward for us is the loyalty of our customers.

NEWAN LLC

8.2A5-04(54)

Address: 俄罗斯6, Street Industry, St. Petersburg, Russia Russia building 6, Street Industry, St. Petersburg, Russia
Tel: + 7 (812) 920-36-29
Email: kiv@newanutrition.ru
Web:

Production of dietary food without sugar.

BALZHIN-IMPEX LTD

8.2A5-04(56)

Address: 俄罗斯 Russia 670033,Street Denisov, 13, Ulan Ude,Republic of Buryat
Tel: /
Email: bkb@barul.ru
Web:

«Balzhin-Impex» LLC is a company of the group of companies Barul Group, and presents graintraiding direction, operates under the brand name "Zernysh". The Barul Group was founded in 1996, carries out various types of activity: wholesale and retail trade of grain, oilseeds, feed; export of agricultural products-grain and oilseeds; production of various types of feed; providing of logistics services

JSC "NIZHEGORODSKY MASLO-GIROVOY KOMBINAT"

8.2A5-04(57)

Address: 俄罗斯 Russia Nizhniy Novgorod-Zhirkombinata Highway, 11
Tel: 89101392970
Email: gdn@nmgk.ru
Web:

NMGK Group of Companies is a vertically integrated holding company, which includes oil and fat processing plants, oil crushing plants, silos, soap plant. The history of the company has 125 years of experience in the production and processing of oils and fats.
NMGK is the leader in the Russian markets of soap, mayonnaise, sauces, margarines and spreads.

RUSUN LLC

8.2A5-04(59)

Address: 俄罗斯 Russia 656056, 6A-5 Astronaut Street, City Barnaul, Altai Border Region
Tel: /
Email: info@ru-sun.com
Web:

Production and trading company RUSUN was founded in 2013. We constantly supply a wide range of products: buckwheat, flax, rapeseed, rapeseed oil, linseed oil. The main business activity of our company is export of high-quality goods produced by our own and by other Altai Region producers to the countries. A shipment of ready products is carrying out by railway and motor transport.

LLC USLADA

8.2A5-04(60)

Address: 俄罗斯 Russia 445354, Russia, Samara region. Zhigulevsk, Morkvashinskaya str., 36
Tel: /
Email: a.dubovik@uslada.com
Web:

LLC USLADA works at the confectionery market of Russia and abroad since December 1, 1997. Our company produces Wafer rolls, sugar Cookies, Cookies sandwich, Waffles, waffle sandwich, waffle candy, Marshmallows, Prunes in chocolate, dried Apricots in white glaze.
We are one of the three manufacturers of Wafer rolls in Russia, the analogue of which is only in Europe.

"CRAZY BREW" LLC

8.2A5-04(63)

Address: 俄罗斯 Russia Sverdlovsk Region-Nizhny Tagil-Uchitelskaya ulitsa, 14
Tel: 89827243789
Email: andreev@goldenbeer.ru
Web:

"Crazy Brew" brewery is original Russian craft company, born in the very heart of Russia, on the middle Ural in 2016 by the group of young and talented brewers, graduated from "VLB" Berlin Brewery Institute and experienced in various breweries in Brazil, Germany and Great Britain.

RESURS LLC

8.2A5-04(70)

Address: 俄罗斯 Russia 457000, Chelyabinsk region, Uvelskiy setttlement, 59 Zheleznodorozhnaya str.
Tel: /
Email: o.vasilova@uvelka.ru
Web:

Uvelka is created for those who pay attention to the quality and ingredients of a product, strive to keep on a healthy diet, love to experiment and spend time with the family.
Modern technologies and careful processing of pure selected grain, natural taste and flavor of cooked dishes, natural coating effect and fiber necessary for the body – all this is Uvelka.

BOMBBAR LLC

8.2A5-04(74)

Address: 俄罗斯 Russia 445032, Russian Federation, Togliatti, Dzerzhinskogo str., 68A, office 37
Tel: /
Email: andrey@bombbar.ru
Web:

BOMBBAR is the manufacturer of sugar-free healthy protein products made from high quality natural ingredients only. Our company produces a wide range of sports nutrition and functional foods in its own production. Our mission is to make you enjoy Bombbar product at any time getting maximum health benefit.

"STELMAS-D" LTD

8.2A5-04(75)

Address: 俄罗斯 Russia Moscow-Novosuschyovskaya Street, 22c3
Tel: 89175911262
Email: lider@stelmas.ru
Web:

"Stelmas-D" LLC "Health Waters" was founded in 2002 and specializes in production of drinking water. It is based in Moscow, Russia and owns such trademarks like "SVETLA", "BIOVITA" and "STELMAS".

"EXHIBITION COMPANY ASTI GROUP" LLC

8.2A5-04(76)

Address: 俄罗斯 Russia Moscow-Barklaya street, 6-5, office 302
Tel: +74957976914
Email: nbagmanyan@astigroup.ru
Web: astigroup.ru/about

Asti Group is an exhibition company established in 2001. The company developed reputation of a strong and professional player on the Russian and international exhibition grounds.

KACHETY LLC

8.2A5-04(77)

Address: 俄罗斯 Russia Tomsk-Kuzovlevski Trakt, 6/3
Tel: +7(3822)703-399
Email: kla@kachety.tomsk.ru
Web: kachety.com

Kachety Ltd. is a unique enterprise in Siberia, founded in 2002. In 2016, the Tomsk winery "Kachety" began production of a unique wine, which is based on the natural wealth of Siberia – taiga berries: lingonberries, cranberries, blueberries, black currants, honeysuckle.

MAKFA JSC

8.2A5-04(78)

Address: 俄罗斯 Russia Moscow-Vspolny Lane, building 5, construction 1, Office 1
Tel: +7 351 255 98 90
Email: d.danko@makfa.ru
Web: www.makfahealth.com

JSC MAKFA is the leader of Russian grocery market, the largest producer of pasta in Russian Federation and Eastern Europe ranks in the TOP 5 world's leading pasta producers, brand No1 in pasta and flour segments in Russia.
MAKFA Company has the next product range: pasta from 100% durum wheat, superior grade wheat flour, grains and oats, olive oil.

PRIMORSKAYA TAIGA LLC

8.2A5-04(79)

Address: 俄罗斯 Russia Primorsky Krai-Vladivostok-Pushkinskaya Street, 40
Tel: +74232083555
Email: taigahoney@mail.ru
Web: www.taigahoney.ru

Primorye Taiga was established in April 2015. The company's annual processing capacity of honey is 200000KG. The company successfully exported the first batch of honey to the Chinese market in May 2017. The company plans to increase export to China in the next few years.

SORDIS LTD

8.2A5-04(80)

Address: 俄罗斯 Russia Nizhny Novgorod-47 Fedosenko street
Tel: +(831) 225-12-22
Email: elenalukina@mail.ru
Web: sordis.ru

Sordis company was established on a base of the largest spirits and alcohol production with a 40-year old history which main activity was dedicated to vodka, infusions and fortified wines production. Currently it is a well-known premium class vodka distillery.

KVK LTD

8.2A5-04(81)

Address: 俄罗斯 Russia Temriuk Rayon, Krasnodar Krai-Sennoi-1/3, Mira Street
Tel: + 79163418322
Email: Irina-kvk@yandex.ru
Web: oookvk.ru

Kuban wine company is situated at Taman Bay the winery region dated back at the ancient times; it is a full-cycle winemaking facility, which comprises both grape processing and wine production. The facility is ISO 9001: 2008 certified.

KUBAN-VINO LTD

8.2A5-04(82)

Address: 俄罗斯 Russia Temryuk district, Krasnodar Krai-Starotitrovskaya-Zavodskaya, 2
Tel: +78614891666
Email: amosovgm@kuban-vino.com
Web: kuban-vino.ru

«Kuban-Vino» is one of the largest wineries in Russia for the production of quiet and sparkling grape wines under the trademarks «Chateau Tamagne», «ARISTOV», «Vysoky Bereg» and «Kuban-Vino». Today, Kuban-Vino has 3 own plants, 56 million bottles of wine per year and unprecedented scale even for European winemaking.

OAO "APF "FANAGORIA"

8.2A5-04(83)

Address: 俄罗斯 Russia Temriuk Rayon, Krasnodar Krai-Sennoi-49, Mira Street
Tel: +78614838172
Email: leluk@fanagoria.ru
Web: www.fanagoria.ru

OAO APF Fanagoria is a major Russian full-cycle winemaking facility. Fanagoria produces still and sparkling wines, ice, liqueur and late harvest wines, brandies and grape marc vodka. The total yearly output exceeds 20 million litres.

Commodity Traders Australia Pty Ltd

8.2A6-01(01)

Address: 澳大利亚 Australia VIC-Plenty-136 River Avenue
Tel: +61 3 94329811
Email: john@trifonestatewines.com.au
Web: www.trifonestatewines.com.au

斯坦福庄园是家族拥有的单一葡萄园酒庄，坐落于澳大利亚维多利亚州墨尔本以北150公里的高宝谷（Goulburn Valley）产区。从1860年开始，高宝谷就以盛产高品质葡萄酒而闻名。
斯坦福庄园是维多利亚州最大的单一葡萄园酒庄，也是澳大利亚排名第19位(按葡萄园面积)的酒庄，占地8800亩、栽培16种高品质葡萄，温和凉爽气候、冲积土、洁净水源、充沛阳光，赋予斯坦福庄园持续稳定出产高品质葡萄酒。
Stratford Vineyard on the Goulburn River, Central Victoria is known as the birthplace of our great Australian award-winning single estate Stratford Premium, Super Premium and Reserve wines. Stratford Vineyard wines are vintage from high quality, 100% single estate grapes from a region known for producing premium award winning wines for over 150 years.

元九优尼拜尔国际贸易有限公司 / YUANJIU UNIBALE INTERNATIONAL TRADING(AUSTRALIA)CO.PTY LTD

8.2A6-01(02)

Address: 澳大利亚 Australia 9 Sibbick St, Russell Lea NSW 2046
Tel: 0416244880
Email: zhangzi777@hotmail.com
Web: unibaleclub.com

优尼拜尔是中澳农业和食品自由贸易的骨干，以国家海外农业战略为基础，以优质澳新农产品和食品供应中国消费市场，主要产品有澳新原产牛羊肉、奶粉、蜂蜜、红酒等。北京元九国际贸易有限公司作为优尼拜尔全系产品大中华区总代理，为中国企业及机构、批发及零售商、终端消费者提供出产在澳大利亚与新西兰的优尼拜尔农场和牧场的农产品和食品。
UNIBALE has more than 30,000 hectares of farms and ranches in Australia and New Zealand. It also has the right to purchase and manage Manuka honey, the national treasure of New Zealand, and the Centennial Red Wine Manor in Barosa Valley, Australia.
Unibale is the important of China-Australia free trade in agriculture and food.

L&Q ENTERPRISES PTY LTD(澳冠佳业集团)

8.2A6-01(03)

Address: 澳大利亚 SA-ADELAIDE-25 Australia SA-Adelaide-25, GRENFELL
Tel: +61884242335
Email: MEL62112@GMAIL.COM
Web: www.lqenterprises.com.au

澳冠佳业有限公司因驴而起，是澳大利亚首个专业的集合驴抓捕，养殖，培育，加工屠宰，产品研发的全产业链驴业公司。目前已经在澳洲建立起3个共近4千平方公里的驴牧场作为基地，现有澳洲驴存栏近2万头。
公司现已研发生产出澳大利亚原生态有机驴阿胶糕和驴肉，供应澳洲本地华人市场及海外华人市场。并于2018年参与了首届中国国际进口博览会。
L&Q ENTERPRISES IS THE BIGGEST DONKEY ENTERPRISE IN AUSTRALIA. WE WORK ON AUSTRALIA'S BEST NATURE ENVIRONMENT, AND HIGH STANDARDS OF FOOD SAFETY REGULATION. THE COMPANY IS DOING HARVESTING, FARMING, BREEDING AUSTRALIAN WILD DONKEYS. ALSO DEVELOPING DONKEY PRODUCTS. WE ARE EXPORTING AUSTRALIAN MADE DONKEY PRODUCTS TO OVERSEAS. SUCH LIKE AUSTRALIAN MADE EJIAO AND DONKEY MEAT.

UNIVERSAL PHARMACEUTICALS PTY LTD,

8.2A6-01(06)

Address: 澳大利亚 Australia NSW-Silverwater-9 carolyn, street
Tel: +61401975383
Email: design2@wealthyhealth.com.au
Web:

Goodlife Nutrition 始于1995年的悉尼，身为草药世家的创始人Laurence T.D为了让更多人享受到草本植物的纯天然疗效，创立品牌Goodlife Nutrition一直以自然理疗法为基础，萃取来自澳洲本土纯植物精华，致力于打造全球功能性营养补充食品高端品牌。
Goodlife Nutrition products are manufacturing under strict control code of practice GMP, we only use manufactures with world class state-of-the-art manufacturing facility to meets the highest standard for machinery, procedures, and quality control.

COTTEE JERSEY GROUP PTY LTD

8.2A6-01(10)

Address: 澳大利亚 Australia NSW-BOMADERRY-100 RAILWAY ST
Tel: 61450180611
Email: vivian.s@cottee-jersey.com.au
Web: cottee-jersey.com.au

爱薇牛源于百年乳业家族，于1911年将高蛋白，高乳钙，生病少的“皇室”奶牛品种——泽西牛第一次引入澳洲，并创办了第一家牛奶蛋白工厂。从此爱薇牛和澳大利亚乳制品行业一同成长，见证了澳大利亚乳业的百年历程。并成为由政府支持的优秀产业代表。
Jerseyjoy is the retail arm of the Cottee Jersey Group Factory located in Australia. The Jerseyjoy brand are marketed in Australia and overseas, including a wide variety and high quality of specialty milk powders and infant folulations manufactured to world best practice.

BrandFinder Australia Pty Ltd

8.2A6-01(04)

Address: 澳大利亚 Australia Victoria-Fitzroy-425 Smith Street
Tel: +61 3 90888030
Email: jay@brandfinderaustralia.com
Web: www.brandfinderaustralia.com

澳大利亚布兰德方德公司为全世界带来澳大利亚有史以来第一款即饮的奶茶系列饮品。
BrandFinder Australia represents a new Australian company that is making Australia's first Ready to Drink Milk Tea Beverage. Made with only the best Australian ingredients for everyone to enjoy.

Moulamein Food Group Australia Pty LTD

8.2A6-01(05)

Address: 澳大利亚 Australia VIC - Swan Hill-41 Sea lake Swan Hill RD
Tel: 03 50322 553
Email: leo@moulameingrain.com.au
Web: www.moulamein.com.au

MGC is now the largest private grain storage business on Australia's east coast. MGC is heavily focused on creating a path way from paddock to plate, showcasing the nutritious value of locally produced Oats.

NCMC COMMERCIAL (SHANGHAI) CO., LTD / Northern Co-operative Meat Company Ltd

8.2A6-01(08)

Address: 澳大利亚 Australia 10615 Summerland Way (PO Box 379) Casino NSW 2470, Australia
Tel: +86 (21) 5629 2041
Email: oscar.chen@ncmcchina.com
Web:

The Northern Co-operative Meat Company Ltd (NCMC) is Australia's largest meat processing Co-operative, proudly 100% member owned.

AUSTRALIA FENGSHENzGPIN(FSP)

8.2A6-01(09)

Address: 澳大利亚 Australia NSW-Sydney-Level 20, Tower A, The Zenith, 821 Pacific Highway Chatswood
Tel: +61 404836298
Email: Sophyliu@oz-town.com
Web:

Our company is an export company and our products are focus on the health care products, which produce from Australia.

Emins Holdings Pty Ltd

8.2A6-01(11)

Address: 澳大利亚 Australia NSW-Chatswood-Suite 603 7 Railway St
Tel: +61405537156
Email: jeffery@ausilk.com.au
Web:

We export fresh Australian milk into China, looking to expand our market into Cheese and other dairy products also.

Brother in arms

8.2A6-01(12)

Address: 澳大利亚 Australia NSW-Sydney-Level 20, Tower A, The Zenith, 821 Pacific Highway Chatswood
Tel: +61 404836298
Email: Sophyliu@oz-town.com
Web:

Brothers in Arms is very much a family concern. As the owners, Guy & Liz Adams are involved in all aspects of the business on a daily basis. It's not surprising really as they live on the vineyard only 2 minutes down the road to the winery.

SUAY MAK MAK FOOD(BANGKOK) CO., LTD

8.2A6-02

Address: 泰国 Thailand Santinived village, Petchakaseam 55, Laksong, Bangkok 10160 Thailand
Tel: 021-34225761
Email: 490971950@qq.com
Web:

水妈妈食品是来自泰国的品牌，“Sui Ma Ma”主要经营东南亚进口产品，并与各大厂商都建立着长期稳固的合作关系。
目前水妈妈产品在餐饮、流通、商超、电子商务等渠道，都有广泛的认知度与好评。在做好现有产品推广与服务的同时，我们将专注于厨房料理，不断领跑在专业的道路上，坚持将正宗的东南亚味道带给大家。
SUI MA MA FOOD is a Thai brand. Sui Ma Ma mainly engaged in import products from Southeast Asia. At present, SUI MA MA products have a wide range of awareness and praise in catering, wholesale, hyper/super market, E-commerce and other channels. While providing a good service and promotion of existing products, we will focus on kitchen cooking as well.

Tasty by Choice

8.2A6-03

Address: 意大利 Italy POSTAL CODE98070-STREET PROVINCIALE
Tel: 021-52920877
Email: yzou@orientbusiness.com.cn
Web:

Tasty by Choice is a company specialized in prepackaged-food, wine, marine products and so on from Japan, Canada, Italy, Samoa, etc. We've been working on bringing in imported products to China.

Maple Timber Resources Corp.

8.2A6-04

Address: 加拿大 Canada BC-Richmond-1135-22091 Fraserwood Way
Tel: +1-778-223-2324
Email: info@maple-timber.com
Web:

Maple Timber Resources Corp. is a Canadian company mainly focusing in 2 sectors: exporting Canadian healthy food and cross-border trading of top-selling products to China. Our products include Canadian Alligga brand flaxseed oil, roasted/ground flaxseed and cross-border top-sellers from Canada, USA, UK, Japan, and Australia, which are available in high-end superstore and online platforms globally.

KSF Acquisition UK Ltd

8.2A7-01

Address: 英国 伦敦-林德赫斯特镇-Unit 3, Queen's Square Ascot Business Park Lyndhurst Road Ascot SL5 9FE UNITED KINGDOM United Kingdom London - Linderhurst Town-Unit 3, Queen's Square Ascot Business Park Lyndhurst Road Ascot SL5 9FE UNITED KINGDOM
Tel: 051288819799
Email: zhupianpian@kjn.cn
Web: www.slimfast.co.uk

SlimFast品牌成立于1977年，已拥有42年品牌历史。1988至2000年间，SlimFast销售额迅速增长，成为英国首屈一指的膳食替代饮食品牌，于2017年正式进入中国市场。SlimFast宗旨是致力于科学和健康的减肥计划，每一餐的奶昔包含23种维生素和矿物质。
SlimFast is the original and great tasting meal replacement brand.Renowned for its doable weight loss approach, SlimFast holds its crown as the No.1 meal replacement brand across the globe and has 42 years of heritage and expertise to support its weight loss management system.

The Anchor Group sprl

8.2A7-02

Address: 比利时 Belgium 343, avenue Louise 1050 Brussels
Tel: +86 21 52383226
Email: chenlei@nutex.cn
Web: www.anchorg.com

Our vision is to run a powerful and efficient network, present in all 4 corners of the world and all areas of business, to the benefit of its members and their stakeholders.
We stimulate and promote trade amongst our members and create long lasting partnerships worldwide. Members share their knowledge and expertise, are invited to join forces and to conduct business together in confidence.

Kilcoy Global Foods, Ltd / Kilcoy Pastoral Company

8.2A7-03

Address: 澳大利亚 Australia QLD-4830 D' Aguilar Highway
Tel: 021-62216728
Email: zonghui.wang@kilcoyglobalfoods.cn
Web:

Kilcoy Pastoral Company(KPC) specializes in the production of premium quality, grain-fed beef and beef products at its world-leading facility in kilcoy, australia.

Pauleczki-Vin Ltd.

8.2B1-01(02)

Address: 匈牙利 Hungary Tolcsva-Bajcsy-Zs. u. 14
Tel: +36/47/384-026
Email: dr.pauleczki@enternet.hu
Web: www.pauleczki-vin.hu

Pauleczki-Vin Winery is located in Tolcsva, Tokaj wine region. The 20-hectare estate is planted exclusively with Muscat Lunel grape which enables the company to produce intensely aromatic samorodni and aszú wines of superior quality. In addition to its own vineyards, the winery also buys Muscat Lunel aszú berries from 50 hectares. The golden wire sleeve on the bottle is the trademark of the winery

Royal Delicatesse Hungary Ltd.

8.2B1-01(03)

Address: 匈牙利 Hungary Budapest-Gulner Gy. street 4, 4. E. lph. 27
Tel: +36/20/956 1491
Email: rexciborum.goosliver shop@gmail.com
Web: royaldelicatesse.hu/hu

The history and success of our company started in 1896.
120 years ago Orosháza became the centre for farming, processing and selling poultry, and the Hungarian fatty liver of geese became popular both at home and abroad.
Our heritage, knowledge and commitment to the Hungarian fatty goose liver guarantee the perfect quality of Rex Ciborum products.

Master Good Ltd.

8.2B1-01(05)

Address: 匈牙利 Hungary Kisvárda-Ipari street 9.
Tel: +36/45/501-100
Email: lippaia@mastergood.hu
Web: www.mastergood.hu

Master Good Co. Ltd is Hungary's biggest integrated poultry production system, owned in 100% by the Bárány family for 4 generations, therefore it is the oldest chicken breeding dynasty in Central Europe.
Production volumes:
•45 millon chicken slaughtering/year
•6000 tons of further processed products/year
Our references: Tesco, Spar, Aldi, Auchan, McDonald's.

Grand Tokaj Ltd.

8.2B1-01(06)

Address: 匈牙利 Hungary Tolcsva-Petofi Sandor street 36-40.
Tel: +36/47/384-164
Email: szabo-zoltan@grandtokaj.com
Web: grandtokaj.com

Grand Tokaj was the first to introduce Tokaji wines to China in the 70s, the highest quality wines of Hungary. Guardian and protector of Hungary's national wine, Grand Tokaj is the largest winemaker in the Tokaj wine region and is owned by the Hungarian State. The winery has strengthened its presence on the international market by providing the highest quality and largest quantity of Tokaji wines.

Naturtex Wool Feather and Down Processing Ltd. / Naturtex Ltd.

8.2B1-01(07)

Address: 匈牙利 Hungary Szeged-Cserje street 9
Tel: +36/62/464006
Email: major.ildiko@naturtex.hu
Web: naturtex.hu

Naturtex Ltd has a leading role both in the Hungarian and international down market. Hungarian feather and down are famous and well received because of its special heat insulating features. During the washing and sterilizing process we use a special thermal water technology. Naturtex has a special thermooil drying system which works at 135℃, the result is the finest down of the highest quality.

Pannon Tokaj Winery Ltd.

8.2B1-01(08)

Address: 匈牙利 Hungary Budapest-Kelenfoldi street 2.
Tel: +36/1/3727470
Email: nyari@pannontokaj.hu
Web: www.pannontokaj.hu

The Pannon Tokaj Ltd. owns 22 hectars, they are totally cultivated. 3 traditional white grape varieties are grown in our vineyards. The wines have been sold in Hungary, all European countries, Asia, Australia, Africa, Canada, Caribbean Islands. Storing capacitiy of temperature controlled SS Tanks are currently 155.000 litres. The bottleing capacity is approximately 3 million bottles per year.

Felfoldi Confectionary Ltd.

8.2B1-01(09)

Address: 匈牙利 Hungary Debrecen-Keleti Ipartelep street 6.
Tel: +36/52/437287
Email: sales1@felfoldi.hu
Web: felfoldi.hu

Felfoldi Confectionary Ltd. is a Hungarian family-owned company offering quality confectionery, bakery and snack products. Our mission is to deliver happiness with a personal touch on a global scale with a winning combination of tradition, fun and innovation. The company exports to over 40 countries worldwide and is currently expanding strongly.

Szatmari Kacsa Ltd.

8.2B1-01(10)

Address: 匈牙利 Hungary Balástya-Tanya 198.
Tel: +36 20 365 7873
Email: mate.fischer@cetoriental.com
Web: szatmarikacsa.hu

Our company is in the heart of Hungarian countryside, close to the biggest duck producing farms, in the city of Balastya, Csongrad county. We have been working and expanding as a family holding since 1990. It is a long-cherished dream that became reality in 2010 when we built a wonderful poultry processing factory with a capacity to serve European and Asian markets.

Sole-Mizo Ltd.

8.2B1-01(11)

Address: 匈牙利 Hungary Szeged-Budapesti street 6.
Tel: +36/62/569000
Email: eva.major-varga@bonafarm.hu
Web: www.bonafarmcsoport.hu/bonafarm-csoport/solemizo

Sole Mizo Plc a leading dairy company in Hungary producing high quality dairy products and its distribution in the domestic, Central and Eastern European as well as Middle East markets. It processes 400 000 tons of milk/year. Main export products: UHT milk, UHT flavoured milks and drinks, feta-type cheese, Kashkaval cheese, Akkawi cheese, industrial powders: MPC 80; MPI 85

TINE SA

8.2B1-02(02)

Address: 挪威 Norway Oslo-Lakkegata 23
Tel: +4790184065
Email: susanne.almestad@tine.no
Web: www.tine.no/en

TINE SA is Norway's largest producer, distributor and exporter of dairy products with 11,400 members (owners) and 9,000 cooperative farms. Our goal being to provide the consumers with food that provides a healthier and positive food experience.

Aker BioMarine Antarctic AS

8.2B1-02(03)

Address: 挪威 Norway Norway-Lysaker-Oksenøyvn. 10 (Bygg B)
Tel: +86 (0) 21 6109 9171
Email: andreas.thorud@akerbiomarine.com
Web: www.akerbiomarine.com

阿克海洋生物有限公司是一家生物技术创新和南极磷虾捕捞公司，致力于改善人类和地球健康。公司为营养品，水产养殖和动物喂养开发磷虾相关原料。全透明的价值链从南极海域可持续性磷虾捕捞延伸至蒙得维的亚物流中心，休斯顿工厂，到世界各地的客户手中。阿克海洋生物有限公司由成立于1841年的工业领先者阿克集团完全控制。
Aker BioMarine is a biotech innovator and Antarctic krill-harvesting company, dedicated to improving human and planetary health. The company develops krill-based ingredients for nutraceutical, aquaculture, and animal feed applications. The company's fully transparent value chain from sustainable krill harvesting in Antarctic to customers around the world.

维京绿色贸易有限公司 / Nordic Green Trade & Export AS

8.2B1-02(04)

Address: 挪威 Norway Oslo-Grønlibakken 2
Tel: ＋47 41440388
Email: EliseChen86@gmail.com
Web: www.nordic-greentrade.com

注重挪威和中国之间绿色环保商务和贸易。其中包括食品，商品和技术的进出口，商业发展，会议和展览服务，代理，销售及咨询服务。食品包括：保健食品，海鲜和农产品包括奶制品。其他包括：清洁环保科技和设备，船舶设备等。
Focusing on business development and trade between Norway and China. These include the import and export of food, goods and technology. Agents services, sales and consulting services. Foods include: Health foods, Seafood and Agricultural products including Dairy products. Other: Environmental friendly Clean-tech and equipment, marine equipment.

挪威海产局 / Norwegian Seafood Council

8.2B1-02(05)

Address: 挪威 Norway Troms-Tromso-Stortorget 1
Tel: +86 156 1801 8510
Email: vb@seafood.no
Web: en.seafood.no

挪威海产局隶属于挪威贸易、工业与渔业部。挪威海产局携手挪威渔业和水产养殖行业通过收集市场信息、市场开发和名誉风险管理，致力于发展挪威海产的全球消费市场。
The Norwegian Seafood Council is a public company owned by the Ministry of Trade, Industry and Fisheries and works with the Norwegian fisheries and aquaculture industries to develop markets for Norwegian seafood through local market intelligence, market development and reputational risk management.

Cibus Maris Norway AS

8.2B1-02(06)

Address: 挪威 Nordland-8803 Sandnessjøen-Liveien 5 Norway Nordland-NO-8803 Sandnessjøen-Liveien 5
Tel: 004793222243 / 0047 93222243
Email: cms@cibusmaris.no
Web:

Cibus Maris Norway AS is a newly established Norwegian company based in the northern part of Norway.
We want to promote Norwegian exclusive seafood to the high-end market. We have developed our own Northern Lights caviar from Lumpfish.
The caviar has been named AURÕRAE – Lumpfish Pearls.

Aass Bryggeri AS

8.2B1-02(07)

Address: 挪威 Norway Drammen-Ole Steens Gate 10
Tel: 004790655567
Email: lauritz.aass@aass.no
Web: www.aass.no

Aass Brewery is the oldest brewery in Norway with 185 years of existence, dating back to 1834. We produce roughly 30 different types of beers, ciders and mineral waters across most standards. The company is 100% owned by the family and located by the very same river bank where it was founded. Aass Brewery focuses on producing high quality products while respecting the German Bavarian Purity Law.

Japan Bio Science Laboratory / Japan Bio Science Laboratory Co.,Ltd.

8.2B1-03

Address: 日本 Japan Osaka-Fukushima-ku-JBSL Umeda Bldg. 5F, 1-4-40 Fukushima
Tel: 86-21-34711083
Email: 1579429400@qq.com
Web: www.jbsl-net.com

Since our foundation in 1974, we have been developing and manufacturing the functional health food under the corporate beliefs of "Harmony of Human Beings and Mother Nature". Currently, we supply 8 products at the head of "The Fermented Vegetable Extract "BIOZYME" which has been sold since we started our business and "The Fermented Soybean Extract "NSK-SD" which contains rich nattokinase.

BACCHUS ENTERPRISES INC

8.2B1-04

Address: 加拿大 Canada 6925 ADERA ST, VANCOUVER, BC, V6P5C2
Tel: 0519-83367861
Email: 498829398@qq.com
Web:

BACCHUS ENTERPRISES INC成 立 于2016年6月20日，主要从事法国、西班牙、澳大利亚、美国、日本等国家的酒类进口加拿大业务，另外还从事对中国保健品、护肤品、亚麻籽油、坚果、海参、冰酒、葡萄酒、西洋参等的出口业务。每年进出口额超过1000万加币。我公司秉承信誉第一，服务客户的经营信念，几年来贸易额逐步提升，客户粘合度加深，公司正进入良好的发展阶段。
BACCHUS ENTERPRISES INC Founded on June 20, 2016, it is mainly engaged in the import of alcoholic beverages from France, Spain, Australia, the United States, Japan and other countries. It is also engaged in the export of Chinese health products, skin care products, linseed oil, nuts, sea cucumbers, ice wine, wine, and ginseng. Business. Imports and exports exceed 10 million Canadian dollars annual

METCASH EXPORT SERVICE PTY

8.2B1-05

Address: 澳大利亚 Australia 1 Thomas Holt Drive | Macquarie Park | NSW 2113
Tel: 021-60325151Ext161
Email: jacky.pan@metcash.com
Web:

METCASH是澳大利亚批发和市场营销巨头，从事食品杂货类、新鲜农产品类、酒类、五金工具类以及其他日用快消品。
METCASH IS AUSTRALIA'S LEADING WHOLESALE DISTRIBUTION AND MARKETING COMPANY,SPECIALISING IN GROCERY/FRESH PRODUCE/LIQUOR/HARDWARE AND OTHER FAST MOVING CONSUMER GOODS.

HERNAN CORPORATION SDN BHD

8.2B1-06(01)

Address: 马来西亚 SELANGOR-PETALING JAYA-No. 8, Jalan PJU 1a/13, Taman Perindustrian Jaya Malaysia SELANGOR-BANDAR PUNCAK ALAM-NO 15, JALAN TIAJ 2/5 TAMAN INDUSTRI ALAM JAYA
Tel: +603-77342388
Email: barbara@hernan.com.my
Web: www.hernan.com.my

Started in 1996, Hernan Corporation is Malaysia's largest and leading exporter of Malaysian durians.
Hernan has brought Malaysian durians to international stage and provides wide range of durian products from frozen durians to delectable durian treats such as durian snacks, desserts and mooncake. Certified and regulated under the stringent standards set by HACCP, Halal, GMP and MyGAP.

Million Sunray Sdn Bhd

8.2B1-06(02)

Address: 马来西亚 Malaysia Sarawak-Kota Samarahan-1st Floor, S/L 24, Lot 672, Block 14, Muara Tuang Land District, Kuching/Samarahan Expressway 94300 Kota Samarahan, Sarawak.
Tel: +6082-502867
Email: catherinel.regal17@gmail.com
Web:

Million Sunray is a subsidiary of SGX mainboard-listed Regal International Group Ltd. (RIG) based in Kuching, Sarawak. Established to complement the property development business of RIG, Million Sunray is a one-stop provider for business and trades solutions in value-chains of Events Management, Agriculture and Education.

马来西亚必胜饮料集团 / Chuan Sin Sdn. Bhd.

8.2B1-06(03)

Address: 马来西亚 Off Jalan Air Kuning-Jalan Reservoir-Perak Darul Ridzuan Taiping Lot 898 Malaysia Perak Darul Ridzuan-Taiping-Lot 898, Jalan Reservoir, Off Jalan Air Kuning
Tel: +020 83717655
Email: redmondwang@spritzer.com.cn
Web: www.spritzer.com.my

1989年事必胜由拿督Lim Kok Boon创建于马来西亚。作为马来西亚最畅销的品牌，事必胜确保每一瓶饮品都源于热带雨林。每一瓶事必胜饮料都源自拥有丰富天然矿泉水资源的130万平方米园区内制造和罐装，蕴藏着纯净的地下水源。产品荣获多项国际奖项，包括国际顶级尝味评鉴组织 (iTQi) 颁发的2018年水晶美味奖章。
Since its inception in 1989, SPRITZER BHD has grown to become the most integrated and largest bottled water producer in Malaysia. The group is comprised of 5 subsidiaries, which are all involved in the making and distributing of its products. Products such as mineral water, sparkling natural mineral water, distilled drinking water, or even carbonated fruit drink.

WIJAYAH TRADING SDN BHD

8.2B1-06(04)

Address: 马来西亚 Malaysia SELANGOR-AMPANG-NO 43-45, JALAN KOSAS 1/3, TAMAN KOSAS
Tel: 0060129510339
Email: weichen_03502@hotmail.com
Web:

本公司在马来西亚开设了中药材及日常用品专卖店,主要经营的马来西亚产品有燕窝及高品质酒品。其中包括威士忌和白兰地。
We are operating several Chinese medicine shops in Malaysia which lead us to be very professional in bird nest industry. Nevertheless, we got few shops selling daily goods too and so we are investing in liquor sector. Our liquors is one of the few products that are proven good quality by Scotland wine yard.

JIN BIN (M) PHARMACEUTICAL GROUP SDN. BHD.

8.2B1-06(05)

Address: 马来西亚 Malaysia Kedah-Alor Setar-A-50, Susuran Tandop, Kawasan Perusahaan Tandop Baru,
Tel: +6047725088
Email: info@hurixs.com.my
Web: www.hurixs.com.my

仁敏（马）集团股份药厂有限公司
•成立于1998年，主要进行包装及生产好力食品系列及OEM产品。
•于2010年三月取得(HACCP)国际食品安全认证。
•于2005年通过 ISO 9001:2008国际卓越品质管理证书认证。
JIN BIN (M) PHARMACEUTICAL GROUP SDN BHD established in 1998, involved in the repacking and manufacturing of HURIX'S food series products. Obtained HACCP certification in 2010 & ISO 9001:2015 in year 2018.

DONG SIN FOOD SDN BHD

8.2B1-06(07)

Address: 马来西亚 Malaysia SABAH-KOTA KINABALU-LOT 24,1ST FLOOR,HTM INDUSTRIAL ESTATE KOLOMBONG
Tel: +60 088 380 408
Email: james@dongsin.com.my
Web: www.dongsin.com.my

DONG SIN FOOD SDN BHD was established in 1998. A company backed by more than 20 years of manufacturing and Supply of various noodles and foodstuff products located in Sabah, Malaysia.
The Noodles products have "HALAL"

宝塔食品（马来西亚）有限公司 / Pagoda Foods (Malaysia) Sdn Bhd

8.2B1-06(08)

Address: 马来西亚 Malaysia Perak-Sungai Siput (N)-Lot 445, Mukim Sungai Siput, 31100
Tel: + (605) 5981146
Email: csliew@pagoda.com.my
Web: www.pagoda.com.my

宝塔食品（马来西亚）有限公司成立于1945年，是马来西亚其中一间最大的坚果生产商。本公司的产品系列包含不同口味的铝箔袋装和复合罐装的万里望带壳花生、烘烤花生、脆皮花生豆、腰果、杏仁、混合坚果等。
宝塔标坚果产品不含反式脂肪、防腐剂、人工色素及人工调味素。
本公司已获得国际ISO 9001证书、马来西亚清真食品证书和马来西亚政府卫生部食品安全行业责任（MeSTI）证书。
Pagoda Foods (Malaysia) Sdn Bhd is an Original Brand Manufacturer of nuts in Malaysia since 1945. Our range of nuts products include roasted nuts in shell, baked peanuts, coated peanuts, baked cashew nuts, almond, pistachio and mixed nuts in assorted flavours with packaging in aluminium foil bags and canisters.
Our company is ISO 9001 Certified and PAGODA nuts are Halal Certified.

义利粮油有限公司 / Yee Lee Edible Oils Sdn.Bhd

8.2B1-06(09)

Address: 马来西亚 Malaysia Perak-Ipoh-Lot 85, Jalan Portland, Tasek Industrial Estate, 31400
Tel: 605-2908257
Email: vincentc@yeelee.com.my
Web: www.yeelee.com.my

提炼和生产食用油
We are palm oil refinery and cooking oils manufacturer

东阳食品工业有限公司 / TONG YOUNG FOOD INDUSTRIES SDN BHD

8.2B1-06(10)

Address: 马来西亚 Malaysia PENANG-SIMPANG AMPAT, -NO. 2, LORONG INDUSTRI RINGAN PERMATANG TINGGI, KAWASAN INDUSTRI RINGAN PERMATANG TINGGI,
Tel: +6042402286
Email: ty.annie@tongyoungfood.com.my
Web: www.tongyoungfood.com.my

东阳食品工业有限公司是一家酱料制造厂商。我司采用天然材料生产多种正宗亚洲酱料包。随着现代生活方式，更好的生活质量和工作的无尽需求，我司致力于为消费者提供优质即食食品，而不影响菜肴的口感。我司的核心制造工作是将酱料包与面条，米粉，燕麦，面包等主食配合成成品。让世界各地消费者可以品尝到马来西亚特别的香料，原料及口味。
Tong Young produces a wide selection of Authentic Asian instant cooking pastes using fresh natural ingredients. With today's modern lifestyle, better quality of life and endless demand from work, Tong Young aims to provide quality instant noodles and pastes to consumers without compromising taste, color and texture of dishes.

J.B. PHARMACY GROUP SDN BHD

8.2B1-06(11)

Address: 马来西亚 吉打-亚罗士打-628 新丹洛工业区 Malaysia Keda-Arosh-628 New Danlow Industrial Area
Tel: +6047725088
Email: info@hurixs.com.my
Web: www.hurixs.com.my

仁敏中西药厂集团股份有限公司是马来西亚的草药品与保健品制造商的先驱。获得马来西亚卫生部颁发的国际优良制造规范准证(cGMP)以及 MS ISO 9001:2015国际标准组织认证，产品清真认证。
J.B. Pharmacy Group Sdn Bhd a leading manufacturer of herbal based medicines & health care supplements in Malaysia, awarded the cGMP by the Malaysian Ministry of Health and MS ISO 9001:2015 Quality Management

HAPPY GRASS PRODUCTS SDN BHD

8.2B1-06(12)

Address: 马来西亚 Malaysia Johor-Batu 35, Jalan Johor-Plo No. 14, Jalan Perindustrian 2, Kawasan Perindustrian Pontian,
Tel: 076867748
Email: cutieswlee88@hotmail.com
Web: happygrassproductssdnbhd

HAPPY GRASS traces its root to a small business started in 1932. It built its specialty in food related products and services over the year. It acted as a trusted provider for local community. The company entered a period of high growth after the third generation of the family took over the management. The new management put great emphasize on research and innovation.

AAA PRODUCTS ENTERPRISE

8.2B1-06(13)

Address: 马来西亚 Malaysia JOHOR-JOHOR BARU-55, JALAN LANDAK RAYA
Tel: +60127083010
Email: aaaproduct88@hotmail.com
Web:

马来西亚上品燕有限公司有一组人员专注于管理燕屋，采燕及燕窝清洗。我们的燕窝主要销往国外包括中国及其他国家。本次参展目的是寻找批发商，经销商等长期合作伙伴。
AAA PRODUCTS ENTERPRISE have a teams specialised in cultivating & cleaning of birdnest locally in Malaysia. We market & target our birdnest oversea to China and others. We are looking for long term partner either whole seller, Dealer & Retailer.

IN-JOY MARKETING (M) SDN BHD

8.2B1-06(14)

Address: 马来西亚 Malaysia KEDAH-ALOR SETAR-100-N KAWASAN PERUSAHAAN MERGONG, SEBERANG JALAN PUTRA
Tel: 6047339619
Email: samee@injoy.com.my
Web: in-joymarketing(m)sdnbhd

In-Joy Marketing was found in the 1948 and was known for a coffee and beverage manufacturer, In-Joy was mostly known for their juice drink and tea series for In-Joy and Zenith brand selling in China.

GUAN TONG INDUSTRIES SDN BHD

8.2B1-06(15)

Address: 马来西亚 Malaysia Kedah-Alor Setar-100N, KAW PERUSAHAAN MERGONG, SEBERANG JALAN PUTRA
Tel: 6047339619
Email: jeebh@injoy.com.my
Web: www.injoy.com.my

Guan Tong Industries Sdn Bhd, was found in the late 1940's by two young entrepreneurs arm with skills handed down from generations to generations, a coffee roaster together with tea leaves, the factory remain their distribution with the products untill today.

金星工业(马)有限公司 / GIN SENG INDUSTRIAL (M) SDN BHD

8.2B1-06(16)

Address: 马来西亚 Malaysia PERAK-IPOH-2D, JALAN MERLIN
Tel: +6052418163
Email: ginseng-mal@hotmail.com
Web: www.gskingstar.com

金星怡保白咖啡是马来西亚怡保一家最正宗老字号的白咖啡，深受内地与海外人民的喜爱。它的味道香浓，醇，滑与咖啡味长流于口中。它不上火，常喝能使血管畅通，对身体有益。金星怡保白咖啡有各口味供选择，有三合一白咖啡，榴莲白咖啡，人参白咖啡，东革阿里白咖啡，白奶茶，榛果白咖啡，麝香猫咖啡，山竹咖啡，蓝山咖啡，纯咖啡粉，咖啡豆，猫山王榴莲饼，猫山王榴莲干，红毛丹干，芒果干，清爽青黄柠檬，榴莲奶茶，姜母奶茶。
KING STAR IPOH WHITE COFFEE is the Ipoh oldest traditional famous white coffee manufacturer and very well being in Malaysia and oversea. We have variety taste of White Coffee Cappuccino, Durian Coffee, Ginseng Coffee, Tongkat Ali Coffee, White Milk Tea, Hazelnut Coffee and Luwak Coffee, Mangoesteen Coffee, Blue Mountain Coffee, Instant Coffee Powder, Coffee Beans, Durian Biscuit, Musang King Freez.

LEMBAH BUDI SDN BHD

8.2B1-06(17)

Address: 马来西亚 Malaysia PERAK-TAIPING-PT4844, JALAN PERUSAHAAN TUPAI, KAWASAN PERINDUSTRIAN RINGAN TUPAI
Tel:
Email: lbsb4844@hotmail.com
Web:

纯正天然燕窝有限公司位于马来西亚霹雳州，至少有三十年历史，以专售卖燕窝闻名。本公司拥有数十间燕屋，所出产的燕窝属天然产品，无漂白、无人工添加剂，有政府注册标签为证。我们以为各地顾客提供优质燕窝为宗旨，有遍布世界各地的经销商。
Our company has been more than 30 years. The company own several swiftlet houses in Perak, Malaysia. Our mission is to sell high quality bird's nest to consumers. This is due to our cleaning process did not involve any bleaching, preservative, colouring, additional ingredients, and no glue. Our prices are reasonable and affordable so that everyone may get to enjoy superior quality bird's nest.

SIN SING CAFE SDN BHD

8.2B1-06(18)

Address: 马来西亚 Malaysia MELAKA-MELAKA-NO.99, JALAN HANG JEBAT
Tel: +60192883498
Email: sinsingcafe1@gmail.com
Web:

We are trading company for COFFEE, TEA and HOT CHOCOLATE Beverages.
BRANDS AND PRODUCTS.Our brands, "MEET U & Tupai Special".
We got products range from Pure Coffee, Coffee Mixture, Coffee Bag without Sugar, Coffee Bag with Sugar, Tea Dust, Instant Premix Coffee 3 In 1, Instant White Coffee Cappuccino, Instant White Coffee Tarik and White Tea Tarik.

PRISTINE FOOD STUFF SDN BHD

8.2B1-06(19)

Address: 马来西亚 Malaysia Sabah-Kota Kinabalu-Lot 34-35, Beverly Hills Industrial/ Commercial Park, Off Jalan Penampang Lama, Jalan Bundusan, 88300
Tel: +6088-725720
Email: taluwang@yahoo.com
Web: www.taluwang.com.my

位于婆罗洲，享有风下之乡称誉的沙巴，拥有迷人的沙滩和茂密的热带雨林，出产丰富的热带水果。Taluwang公司精心选取纯正新鲜的椰奶，结合本地新鲜的热带水果，打造出四寸长原汁原味的纯果肉冰棒，美味可口。除了自己享用，更是送礼佳品。
Combine pristine and lush rainforests teeming with tropical fruit, a tropical paradise of soft sand and crystal-clear waters. This is Sabah Malaysian Borneo. Taluwang makes a four-inch long frozen stick ice cream by combining two of the simplest yet most common pleasures found in Borneo – rich healthy tropical fruits and of course, the fresh milk of coconuts.

Yan Ee (Malaysia) Sdn. Bhd.

8.2B1-06(20)

Address: 马来西亚 Malaysia Selangor-Batu Caves-36, Jalan Idaman 1, Taman Bukit Idaman
Tel: 0162143333
Email: yanyuyanwo@gmail.com
jiahong2000@163.com
Web:

主要业务为出口马来西亚商品到中国，也组织中马交流活动。公司加入马来西亚中华总商会、马来西亚水产商公会、马来西亚燕窝商联合会等商会组织。2018年投资组建上海公司建设了东盟国家馆，也在各地组建东盟国家馆，包括南京、重庆、河北、厦门、福州、钦州等。公司旨在通过这个平台拓展自营产品以外，带领更多的东南亚中小企业商家和优质商品开拓广大的中国市场。
-Exporting products of Malaysia to China.
-Organising business trade exchange.
-Actively participated in organisations such as ACCCIM, MADA, and MBNMA.
-In 2018, established the ASEAN Pavilion in the NECC Shanghai, following by Nanjing, Chongqing & Xiamen.
-Aim to expand the market of products of ASEAN countries through this platform.

MOH KEE ENTERPRISE SDN BHD

8.2B1-06(21)

Address: 马来西亚 Malaysia Perak-Sitiawan-No. 21&22, Jalan Desa Koh Koh 3, Medan Desa Koh, Kampung Koh
Tel: +6056926636
Email: mohkeebirdnest@yahoo.com
Web: www.mohkeebirdnest.com.my

Moh Kee Birdnest was established in Sitiawan, the birthplace of Birdnest in Peninsular Malaysia. Sitiawan, situated in the state of Perak (West Coast), surrounded by Tropical Rainforest climate and vast plantations. We are now the first and only approved one-stop birdnest processing plant in Perak to export birdnest to China. Our efforts have gained various government official recognitions.

SWEETKISS MARKETING SDN BHD

8.2B1-06(22)

Address: 马来西亚 Malaysia SELANGOR-SEMENYIH-NO 36, 38 & 40, JALAN MEGA B,
Tel: 00603-87244188
Email: info@sweetkissfood.com
Web: www.sweetkissfood.com

SWEETKISS company established in August 1995,currently located on land with covering area of 100,000 sq. ft. in Semenyih,Selangor,Malaysia. The company manufactures chocolates and snacks which has been granted HALAL Certification from JAKIM Malaysia, ISO 22000 and HACCP certification. SWEETKISS promise that every pack of products come with our quality assurance and the satisfaction is guaranteed.

Julies Manufacturing Sdn. Bhd.

8.2B1-06(23)

Address: 马来西亚 Malaysia 78000-AG 6876 ALOR GAJAH INDUSTRIAL, .
Tel: 06-5561401
Email: csng@julies.com.my
Web: juliesmanufacturingsdn.bhd.

茱莉制造有限公司，是饼干制造商。“茱蒂丝”自1981年成立至今现已经成为一个国内外家喻户晓的品牌。
茱蒂丝标语“爱心烘焙”。在制造过程中，我们注重品质，食品安全和卫生。
公司的核心价值观是“热诚”，“廉正”，“良心”和“责任”。这些价值观正好都反映了我们企业的经营理念。饼干是一种食品，我们一直坚守着“我们不吃的，决不让他人食用”的信念，烘焙制造的过程严禁添加任何人造色素以及防腐剂。
The brand "Julie's" has been in the Malaysian market since 1985. Since then, "Julie's" has built its reputation to become a household brand name known for quality and tasty biscuits in many Asia-Pacific regions. Some of our well-known signature products include Peanut Butter Sandwich, Golden Crackers, and Love Letters.

ATO GLOBAL SDN BHD

8.2B1-06(27)

Address: 马来西亚 Malaysia SELANGOR-KAJANG-NO 71, JALAN SUTERA 2/2, TAMAN SUTERA
Tel: 0060387244188
Email: sweetkiss.debtor1@gmail.com
Web: www.sweetkissfood.com

SWEETKISS company established in August 1995, currently located on land with covering area of 100,000 sq. ft. in Semenyih,Selangor,Malaysia. The company manufactures chocolates and snacks which has been granted HALAL Certification from JAKIM Malaysia, ISO 22000 and HACCP certification. SWEETKISS promise that every pack of products come with our quality assurance and the satisfaction is guaranteed.

Kadac Pty Ltd

8.2B2-01

Address: 澳大利亚 Australia VIC3195-Braeside-151-155Woodlands Drive
Tel: 1300 762 025
Email: susan.wu@sh-yiyuan.com
Web: www.kadac.com.au

Kadac was founded in 1973 in Melbourne Australia and it has 46years history. Kadac has 6 independent brands and represents a number of internationally known brand products.We distribute more than 2500 health products.Our principle is provided truely health,nature,organic food to consumers.

务边沉香生物技术有限公司 / ENVIROTECH INDUSTRY SDN BHD

8.2B1-06(25)

Address: 马来西亚 霹雳州 Perak-Gopeng 务边-务边沉香山茶园 Gaharu Tea Valley, Lot 9840, Mukim Teja, Kg. Pintu Padang, Sungai Itek, 31600 Malaysia PERAK-GOPENG-LOT 9840, MUKIM TEJA, KAMPUNG PINTU PADANG, SG. ITEK
Tel: +8675523732741 / +6053575888
Email: wubianhejia@163.com
nicklausho@qq.com
Web: www.hoga.my/hoga-shop

是否在寻求一种新的优质食品？HOGA贺嘉生产研发的食用沉香产品源自于务边沉香山茶园，采用有机天然方法培植沉香，向世界提供食用沉香原料和产品。沉香精华容易被人体吸收，适合用于保健及身体护理，贺嘉沉香茶适合每天冲泡使用，可预防疾病及维持身体健康。沉香纳米粉由沉香树研磨而成，可直接加入日常食材，咖啡中，用于提升食物的口感及营养。获得HACCP，ISO22000，HALAL清真，GMP认证。生产厂房获得中国CCIC认证。
HOGA manufactures a SuperFood Product or Super Ingredient or Flavor from Organic Certified Agarwood in Gopeng Malaysia. HOGA Agarwood Extract, Agarwood Tea and Agarwood Ultra Fine Powder are produced from cultivated Agarwood in a geographically identified and organically managed plantation to ensure sustainable supply of the naturally healthy and beneficial Agarwood ingredient to the world. ISO22

RIO HEALTHY LIFE SDN BHD

8.2B1-06(28)

Address: 马来西亚 Malaysia JOHOR-JOHOR BAHRU-F02-06, JALAN HARMONIUM 24/02, TAMAN DESA TEBRAU
Tel: 073552662
Email: james_te2002@yahoo.co.uk
Web:

Rio Healthy Life Sdn Bhd is the marketing company for Rio Capsule, Rio Refresher & Rio Nano Wonderful Cream in the region. Pioneering in healthcare products we are currently penetrating into European, Western African & Asian markets concurrently.

NIG Nutritionals Limited

8.2B2-02

Address: 新西兰 New Zealand Auckland-Auckland-11 Saunders Place, Avondale
Tel: 021-63410308
Email: zhaozixuan@kjie.com
Web: nignutritionals.co.nz

新益美集团于1984年成立于新西兰奥克兰市，经过近三十年的成长，新益美已经成为新西兰著名的乳品和健康产品的生产企业，并在全球成立十多个分公司，产品畅销数十个国家。目前公司在新西兰拥有总部和两个健康产品生产厂，所有工厂都坐落在新西兰最大的城市奥克兰。2012年，新益美建造的湿混奶粉工厂正式投产。新益美的羊奶粉系列产品在近几年发展迅猛，目前已经是新西兰前列的羊奶供应生产商。
NIG Nutritionals Limited is a group company under New Image Group Limited, established in 1984 in Auckland, New Zealand. NIG Nutritionals Limited now is a well-known dairy and health products manufacturer in New Zealand. The Group has set up subsidiary companies in many countries and products are enjoyed by consumers all over the world.

ORGABIO MANUFACTURING SDN BHD

8.2B1-06(26)

Address: 马来西亚 Malaysia SELANGOR-BERANANG-LOT 83, JALAN 2/3 PHASA 5D BDR TASIK KESUMA TEHCNO PARK 43700
Tel: +60387231439
Email: orgapharma@gmail.com
Web: www.orgabio.com

康泰食品有限公司于2006年所建立，占地约65,000平方尺(sq ft)是一家领先于开发和制造的3合1速溶咖啡代工厂(OEM / ODM / PRIVATE LABEL)现为马来西亚最大的3合1速溶咖啡代工制造厂之一。除3合1速溶咖啡外,也代工制造速溶茶饮和保健食品，产品主要供应至马来西亚、中国、新加坡、泰国和印尼市场,不管来自世界各角落，康泰食品有限公司均可给与优良的客制化服务。
Orgabio was established in 2006. For nearly two decades, Orgabio has an in-house R & D team to customize each and every product in order to create the most unique taste of product for our customers.
The company pioneered the development of 3 in 1 premix coffee and now operates a 65,000-square-feet factory plant with an annual packing capacity of 750 millions sachets of instant products.

Richer Food Sdn Bhd

8.2B1-06(29)

Address: 马来西亚 Malaysia SELANGOR D.E.-PUCHONG-6 JALAN TPP 1/11, TAMAN INDUSTRIES, PUCHONG
Tel: +60193331018
Email: richerfood88@gmail.com
Web:

RICHER FOOD SDN BHD, is a trading company that offers a wide range of quality food and beverages in both domestic and international markets. We bring in local food and beverages and market them to countries around the world. Our food and beverages are absolutely produced in the country of origin Malaysia.?

Australia Swan Vintage Pty Ltd

8.2B2-03(01)

Address: 澳大利亚 Australia South Australia-Tanunda-230 Murray Street
Tel: +86 21 6163 0117 / +61 2 82032239
Email: caichenlin@swanwinegroup.com.cn
Web: www.swanwinegroup.com

天鹅酿酒集团是澳大利亚最大的葡萄酒出口公司之一。尤其在中国，拥有惊人的增长速度。天鹅酿酒集团旗下拥有天鹅庄和天鹅庄・孔雀品牌之外，还拥有天鹅庄酒庄。
天鹅庄酒庄是南澳巴罗萨谷的传统精品酒庄，拥有可以追溯至1908年的百年葡园，是世界上最古老的葡萄园之一；顶级的酿酒师团队，锐意创新的酿造精神，所酿的佳酿在国际上斩获无数荣誉，赢得了广大消费者的一致认可，现已成为最具影响力的澳洲葡萄酒品牌之一。
Swan Wine Group cover all aspects of the Australian wine industry – including premium vineyards, classic wineries, viticultural management and wine making, bottling and marketing, etc.
We are focusing on wine making and branding. We select the premium raw materials and process them with top technology to produce cost-effective wine.

Coles Supermarkets Australia

8.2B2-03(02)

Address: 澳大利亚 Australia Victoria-Hawthorn East-800 Toorak Road
Tel: +61417396978
Email: alan.mccluskey@coles.com.au
Web: www.coles.com.au

Coles has been a leader in Australian retail for over 105 years, with annual sales of around $40 billion across 2500 stores including supermarkets, liquor, fuel and convenience. We work with 7000 Australian farmers and processes to deliver premium meat, seafood, dairy, fresh produce and premium wine and beer.

DOSHISHA CORPORATION

8.2B2-04

Address: 日本 Japan Osaka-Osaka-1-5-5, Higashishinsaibashi
Tel: 81-6-6121-5896
Email: keita-hashimoto@doshisha.co.jp
Web: www.doshisha.co.jp

DOSHISHA was founded in 1974 as a wholesaler of sundry goods for daily use. Since then, we have expanded our business field to include the development and sales of original products, from cabinets to home appliances and processed foods, while handling the wholesale, planning,and sales of premier foreign brand products. Our vision "create an unrivaled company worldwide" guides all our efforts.

Pinlive Foods GmbH

8.2B2-05

Address: 德国 Germany Frankfurt am Main-Lange Straße 31, 60311 Frankfurt am Main
Tel: 13916455774
Email: 573791593@qq.com
Web:

Pinlive Foods GmbH主要负责欧洲地区供应商的产品质量控制，食品研究，发展至今，公司已成为食品行业领先企业。Pinlive Foods GmbH公司经过多年发展,已成功在中国开发和推广了"德亚"、"瓦伦丁"、"亨利"、"雅娜"等自有品牌，目前，主要聚焦于五大食品品类，分别为乳品类、啤酒类、粮油类、谷物类和饼干点心类。
Pinlive Foods GmbH specializes in Quality Management of European suppliers, as well as R & D. We have become one of the leading companies in food and beverage industry. Pinlive Foods GmbH has developed several private labels, such as Weidendorf, Wurenbacher, Hanrae, Aglory under the following categories--dairy, beer, edible oil, cereals, biscuits and snacks.

Perdeberg Wines(Pty) Ltd

8.2B3-01(01)

Address: 南非 South Africa Cape Town-Paarl-Vryguns Farm, Windmeul
Tel: 021 869 8244
Email: Gerhard@perdeberg.co.za
Web: www.perdeberg.co.za

Perdeberg Wines, basking in the shadows of the Paardeberg Mountain in Paarl, adopted its name from scores of Mountain Zebra that once roamed its foothills, mistaken for wild horses by the Dutch. Established in 1941, our wines are rooted in a tradition of producing award winning wines grown in various micro climates in the area. The superior quality of Dry land vineyards and our innovative winemak.

Wang On Fibres (Pty)Ltd

8.2B3-01(011)

Address: 南非 South Africa Gauteng-Chamdor-31 Van Eck Street
Tel: (011) 762 1037
Email: ltong@wangon.co.za
Web: www.wangon.co.za

WANG ON FIBRES is a proudly SA Company which began 1984.We have become S.A.'s largest producer of woven PP bags. Our client base covers a broad spectrum of the SA economy, amongst which are major food groups and primary producers of quality agricultural products. The group also promotes SA Produced goods in Asia ie: Lucerne (Alfalfa); Pecan Nuts and Macadamia Nuts.

Cumacor Cros

8.2B3-01(012)

Address: 南非 South Africa Limpopo-Blouberg Local Municipality-Farm Donkerwater, Maasstroom
Tel: +27 82 563 2713
Email: heidiwapenaar@gmail.com
Web:

Cumacor Crocs is a privately owned company with two Business Partners. Supply jobs to approx. 50 local men and women in the rural area of Maasstroom.
Providing the highest quality leather and superior customer service. We supply the Nile crocodile belly skins approx. 20 000 per annum.

Granor Passi

8.2B3-01(03)

Address: 南非 South Africa Limpopo-Polokwane-4 Kalsiet Street, Magna Via, 0699
Tel: +27 15 298 6000
Email: info@granorpassi.co.za
Web: www.granorpassi.co.za

Founded in 1956, Granor Passi is the leading fruit processor in South Africa. Granor Passi's processing facilities are ideally situated in some of the best fruit farming regions and are thus able to obtain the best of the South African fruit harvest. Product ranges include all citrus varieties, apple, pear, guava, mango and carrot.

AGT Foods Africa

8.2B3-01(04)

Address: 南非 South Africa Gauteng-Krugersdorp-8 Jacobs Street, Chamdor
Tel: +27 11 762 5261
Email: sales@advanceseed.com
Web: www.agtfoods.co.za

AGT Foods Africa, is a trusted specialist supplier of agricultural production, processing and trading services. With a rich South African heritage dating back to 1966. AGT Foods Africa buys quality crops from producers across Southern Africa and ships them to over 50 countries around the world. offerings including crop production, cleaning, grading and processing etc.

Overhex Wines international

8.2B3-01(05)

Address: 南非 South Africa Western Cape-Worcester-R60 Road
Tel: (023) 347 5012
Email: tanja@overhex.com
Web:

Founded in 2007 and situated in the town of Worcester in the Western Cape, our principal focus is on quality and adaptability. From humble beginnings, the Overhex Group has grown from strength to strength and is now proudly the eighth largest exporter of South African wines.

RussellStone Group

8.2B3-01(06)

Address: 南非 South Africa Gauteng-Pretoria-Stone House, 510 Makou Street, Monument Park X2
Tel: 012 482 6600
Email: adrio@russellstone.co.za
Web: www.russellstone.co.za

RussellStone Group is a privately owned investment house that deals in hard and soft commodities. Our group has grown rapidly over the past 15 years and now extends to interests in Australia, USA and Argentina. Future prospects look good as we continue to invest and diversify in all areas of the agricultural value chain. The two AAA-rated investors we have on board.

SOUTH AFRICA FORAGE PRODUCTS TRADING (PTY) LTD

8.2B3-01(07)

Address: 南非 South Africa Gauteng-Johannesburg-12 Susan Street, Strijdom Park Randburg
Tel: 0117913936
Email: steven@apollotechnology.co.za
Web: n/a

South Africa Forage Group acts as a middleman for the export of fruit between SA and China.

Carpe Diem Group

8.2B3-01(08)

Address: 南非 South Africa Northern Cape-Upington-P.O. Box 1928
Tel: +27543322901
Email: marketing@cdgroup.com
Web: www.cdgroup.co.za

Carpe Diem Group produces 100% organic grapes, raisins and pecan nuts. Current capacity 50000 tons raisins, 72000 tons Table Grapes, 135000 tons Wine Grapes and 300000 tons Pecan Nuts. We grow, pack and market our products directly to fulfil our customer need. Total farm hectares under production are 40ha Table Grapes, 50ha Pecans and 210ha Raisin Grapes. Our farms are fully organic.

Truval Manufacturers

8.2B3-01(10)

Address: 南非 South Africa Gauteng-Johannesburg-16 Bosman Road, Ophirton
Tel: 011 353 3500
Email: sandy@truval.co.za
Web: www.truval.co.za

Newly established trade house Denison China Africa based in Johannesburg South Africa, with capabilities of speaking both Mandarin and English in sourcing goods for export from South Africa to China in Partnership with Chinese based company with warehousing and facilities to receive and dispatch goods in China.

Graham Beck Enterprises

8.2B3-01(13)

Address: 南非 South Africa Cape Town-Stellenbosch-The Vineyard Business Park - B2, Corner Adam Tas and Devon Valley road
Tel: 021 876 4607
Email: HermanM@grahambeckenterprises.co.za
Web: www.grahambeck.com

Graham Beck is recognised as one of the foremost Sparkling Wine (Cap Classique) producers. The group follows the time-honoured traditions of crafting outstanding sparkling wines. Since the launch of their maiden Méthode Cap Classique in 1991, their sparkling wine has garnered some of the industry's most prestigious global accolades.

CityLight

8.2B3-02(03)

Address: 荷兰 Netherlands den haag-De werf 11
Tel: 0634523376
Email: w_zhe@yahoo.co.uk
Web:

EUROPACK is the world's largest processor of peeled sunflower seeds. Since 2000 our reputation is based on excellence. From sourcing the finest raw material to the expert processing of the seeds, we directly manage the entire process, driven by constant passion for the absolute best.

ZHONGHE BV

8.2B3-02(05)

Address: 荷兰 Netherlands 2595AM 's-Gravenhage-Prinses Margrietplantsoen 33
Tel: +31619427288
Email: zhonghe.gary@gmail.com
Web:

荷兰中和有限责任公司(ZHONGHE.BV) 于2012年在荷兰注册成立，公司主要在荷兰和比利时经营欧洲本土的葡萄酒、干邑和威士忌，至今已有七年历史。公司与法国、意大利、德国和苏格兰等地区上千家酒庄建立长期合作关系，并在法国南部地区拥有合作的葡萄园，可以根据客户需求提供专属定制服务。荷兰中和为了更好地在国内推广业务，于2014年和2018年分别于香港和广州设立了代表处。
ZHONGHE.BV was incorporated in the Netherlands in 2012. We are focused on European local wines, include wines, cognacs and whiskies. We have 2 office in Europe, one in Netherlands and one in Belgium. The company has established long-term partnerships with thousands of wineries in France, Italy, Germany and Scotland. We have 2 office in China, one in HongKong and one in Guangzhou.

Hermit Concepts BV

8.2B3-02(06)

Address: 荷兰 Netherlands Zuid Holland-The Hague-Saturnusstraat 60 U21
Tel: +31702211185
Email: Willy@hermitgin.com
Web: www.hermitgin.com

Hermit Dutch Coastal gin, a small-batch pot-distilled gin with all-natural botanicals. Handcrafted in the Netherlands. A variety of citrus peels add a lovely freshness.
Juniper and coriander seeds give it its distinctive gin flavour. Completed with seawater from a unique well of 70 meters deep at the Oosterschelde for the saline touch.

DMQ BV

8.2B3-02(07)

Address: 荷兰 Netherlands Noord Holland-Amsterdam-Abberdaan 10
Tel: +31 624933444
Email: a.lee@dutchmilq.nl
Web: www.dutchmilq.nl

DMQ is a Dutch Trading and Distribution company. DMQ represents a number of high quality Dutch brands in China as an exclusive distributor. We choose our brands carefully, they should have real added value to the consumers in the sense of health, nutrition and lifestyle. DMQ is almost 8 years active on the Chinese CBEC and offline market and has extensive Sales and Brandbuilding experience.

Blue Sarefa

8.2B3-02(09)

Address: 荷兰 Zuid Holland-Den Haag-Stieltjesstraat 1006 Netherlands Zuid Holland-Den Haag-Alexanderstraat 10
Tel: +31617334340 / 0031(0)617334340
Email: glenn@bluesarefa.com
Web: www.bluesarefa.com

Blue sarefa is an import and export company that is active in sevaral markets. We are a young company we are growing continuously. We have good contacts within Europe, Asia and worldwide we can offer some very competitive prices for our customers. We trade in a lot of well know brands in food,household goods, hygienic articles, cosmetics & perfumes, confectionaries and beverages.

A TOWN FOODS & BEVERAGES SDN BHD

8.2B3-04(03)

Address: 马来西亚 Malaysia Johor Malaysia-Pontian-701-Jalan Taib 82000
Tel: +6012-3269968
Email: atown_kelvin@hotmail.com
Web:

A TOWN FOOD & BEVERAGES SOW BHD WAS FOUNDED BY MR KELVIN CHUNG IN THE YEAR OF 2010 IN THE LANO OF PENANG,PEARL OF ORIENT.WEST MALAYSIA.
THE CORE BUSINESS FOR THE COMPANY ARE PROMOTING NATIVE RESOURCES SUCH AS BIRND NEST,TIMBER BLACK PEPPER,HAND CRAFTS & ETC,MEAN TIME THE COMPANY ALSO IMPORT PRODUCTS FROM ALL AROUNOTO WORLD TO DISTRIBUTE IN MALAYSIA MARKET.

C EVENT ORGANISER SDN BHD

8.2B3-04(06)

Address: 马来西亚 Malaysia KUALA LUMPUR.-OFF JALAN KELANG LAMA,-NO 17-16, MENARA K1, LORONG 3/137C,
Tel: 6016-3177979
Email: yivon@ceosb.com.my info@ceosb.com.my
Web: www.ceosb.com.my

我们是一家马来西亚中小企业咨询公司，拥有马来西亚大量的食品企业资源，可以为中国买家对接合适的卖家或厂家。
We are a Malaysian SME consulting company with a large number of Malaysian food company resources to connect China sellers to suitable sellers or manufacturers.

STEADY FIRST COMPANY LIMITED

8.2B3-03

Address: 香港地区 HongKong China HONG KONG-HONG KONG-UNIT B9-11,5/F,BLOCK B,HOPLITE INDUSTRAIL CENTRE NO.3-5 WANG TAI ROAD KOWLOON BAY,HONG KONG
Tel: 021-62512077
Email: zjy@nutex.cn
Web: www.sh-nutex.com

上海新联纺进出口有限公司成立于1985年2月，注册资本2.7亿元人民币。公司专门从事进出口贸易，与世界110多个国家和地区的1220多家采购商、860多家供应商建立并保持着贸易关系。公司坚持工贸结合的经营方向，秉承进出口贸易产品向多元化发展的理念，倡导进出口并举、纺织与非纺并重，弘扬多年积攒的优质资源和平台，充分利用公司获得的多项专项许可，有效推进了新联纺向综合型贸易公司的发展。
Our company was incorporated in February 1985 with a registered capital of 270 million Yuan. We specialize in import & export trade and maintain trade relations with more than 1,220 purchasers and over 860 suppliers worldwide. In the past 30 years, we have established a good reputation in the textile & apparel, wine, food, food material and other fast cons.

TD BINARY (M) SDN BHD

8.2B3-04(04)

Address: 马来西亚 Malaysia Selangor-PETALING JAYA-809 BLOCK A LOBBY A KELANA CENTRE POINT, NO 3 JALAN SS7/19
Tel: +60123723785
Email: adelynn@tdbinary.com
Web: www.tdbinary.com

TD Binary (M) Sdn Bhd manufacturer of male supplements and slimming products.We aim at providing affordable, reliable and solid supplement that the market needs. We build marketing team via our solid stockist system and joining exhibition to promote Malaysia made products. We are looking for companies, stockist and agents to collaborate.

Top Fruits Marketing Sdn Bhd

8.2B3-04(07)

Address: 马来西亚 Malaysia Selangor-Seri Kembangan-M1, Jalan ML16, ML 16 Industrial Park
Tel: +60389641833
Email: javin@topfruits.com.my
Web:

SAUJANA FRUITECH SDN BHD

8.2B3-04(01)

Address: 马来西亚 Malaysia selangor-sungai buloh-Lot 9679D, Perindustrian Desa Aman , Batu 11, 47000
Tel: +603-61402660
Email: saujanafruitech@gmail.com
Web: saujanafruitech.asiaep.com saujanafruitech.com

Saujana Fruitech Sdn Bhd is the latest and most modern beverage manufacturing company in Malaysia today.
Our main business is in the manufacturing of top quality and premium grade fruit juice concentrate drink base with Nectar. We also manufacture squash concentrates and other product variant on request for export.

SUN CITY FOOD INDUSTRIES SDN BHD

8.2B3-04(05)

Address: 马来西亚 Malaysia PULAU PINANG-SEBERANG PERAI SELATAN-8, JALAN KASAWARI 2, TAMAN KASAWARI, SIMPANG AMPAT
Tel: +6045887800
Email: suncityfoodindustries@yahoo.com
Web: suncityfoodindustriessdnbhd

昇陽食品工业有限公司主要为生产和销售营养和健康的产品，于本地及海外市场。昇陽食品工业有限公司还专门为批发商和零售商自作品牌和代工制造。公司的主要目标 是发展与保持产品的质量。
Sun City Food Industries Sdn. Bhd. operates as manufacturing and marketing of nutrition and healthy products to local and oversea markets. Sun City Food Industries Sdn. Bhd. also specialist in private label and contract manufacturing for wholesalers and retailer to develop their own brand products. The objective of Company is to grow and maintenance with quality and premium of products.

Top Fruits Sdn Bhd

8.2B3-04(08)

Address: 马来西亚 Malaysia Selangor-Seri Kembangan-M1, Jalan ML16, ML 16 Industrial Park
Tel: +60389641833
Email: javin@topfruits.com.my
Web: www.topfruits.com.my

We began in 1986 as an agricultural paradise business located at Batu Pahat, Johor and owned one of the largest Durian farm in Malaysia. Beside Durian, we also planting other tropical fruits like Pineapples, Mangosteen, Rambutan & Jackfruit. Our Durian farm is awarded MyGAP (Malaysia Good Agriculture Practice) certification, whilst our factories accredited with GMP, HACCP, and HALAL.

妙妙食品工业有限公司 / Miaow Miaow Food Products Sdn Bhd

8.2B3-04(09)

Address: 马来西亚 Johor-Batu Pahat-No.1, Lot 2907, Jalan Sri Bengkal, Parit Sengkuang, Sri Gading Malaysia Johor-Batu Pahat -No.1, Lot 2907, Jalan Sri Bengkal, Parit Sengkuang, Sri Gading,
Tel: +607-4556706
Email: jasonchng@miaow.com.my
Web: www.miaow.com.my

Miaow Miaow Food Products Sdn Bhd（妙妙食品工业有限公司）坐落于马来西亚，柔佛州，峇株巴辖市。公司成立于1989年，是一家休闲食品，加工及出口食品生产商。主要产品为压塑型膨化食品，油炸型膨化食品，烘烤型膨化食品，油炸型枕头膨化食品，进口薯片及饼干。公司所生产的产品均有(Halal清真，HACCP及FSSC 22000 食品安全体系)认证。目前公司业务涵盖马来西亚及其他39个国家。
Miaow Miaow Food Products Sdn Bhd was established in 1989, in Batu Pahat, Johor, Malaysia. We are a food manufacturing company that focuses in the production, processing and export of various snacks & leisure food. Our company products are certified Halal, HACCP and FSSC 22000 Food Safety Management System. Our products are distributed to whole of Malaysia and exported to 39 countries worldwide.

奥亚沉香 / Oud Asia Sdn Bhd

8.2B3-04(12)

Address: 马来西亚 Malaysia Selangor-Seri Kembangan-No. 45 , Jalan PUJ 8/7, Taman Puncak Jalil, Bandar Putra Permai
Tel: +60127776636
Email: kitariachen@gmail.com
Web: www.oudasia.com

本公司的野生沉香茶，是采用西马半岛的纯天然结香之百年野生沉香大樹的沉香芯片及少许的沉香叶配制而成。其它沉香产品系列如:-沉香油，茶，线香，粉，烟支，吊饰，摆件，手串，雕刻品等等。
OudAsia Agarwood Products are produced from pure agarwood chips and a little agarwood leaves from Exotic Agarwood Trees that is at least century old from Peninsular Malaysia. OudAsia also have a variety of products such as Agarwood Oil, Tea, Incense, Powder, Stick, Decoration, Ornaments, Bracelet, Sculpture etc. For more information, please visit www.oudasia.com

联邦燕麦厂 / Federal Oats Mills Sdn.Bhd

8.2B3-04(10)

Address: 马来西亚 Malaysia 4826-A，Jalan Permatang Pauh, 13400 Butterworth，Penang, MALAYSIA
Tel: 020-83299005
Email: 976733756@qq.com
Web: www.mycaptainoats.com

联邦麦片厂开始于1960年，是一个家族企业。至今，我们是东南亚最大的燕麦制造商。同时也出口超过28个国家。
我们最主要的业务在于将燕麦原料处理制成海乐牌食用麦片。
我们专注于生产即食，快熟和大燕麦，而所用的原料是从澳州进口的优质燕麦。
我们已实施HACCP系统，也获得ISO22000食品安全管理体系的认证。此认证也成为了我们保障食品安全的基本指南。
Federal Oats Mills Sdn Bhd (FOM) was incorporated in Malaysia under the Companies Act 1965 on 14th October 1965 with pioneer status granted from the Ministry of Trade and Industry.

INDEPENDENT ELEGANCE SDN BHD

8.2B3-04(13)

Address: 马来西亚 Malaysia AMPANG, SELANGOR-JALAN DAGANG, -A04/3, 3RD FLOOR, BLOCK A,
Tel: 603-42701860
Email: cfwong9178@hotmail.com
Web:

本公司 Independent Elegance Sdn. Bhd.是一家马来西亚私营有限公司成立于2006年，公司主营燕窝，芝麻油，饼干等食品以国内外贸易、批发、零售为主。
本公司始终遵循国际贸易惯例，秉承“重合同、守信用、优质服务、互利双赢”的经营理念，通过贸易纽带紧密联结国内与国际市场，且与国内外多家知名公司建立了良好的合作关系。
Independent Elegance Sdn. Bhd. is a Malaysia private limited company founded in 2006. The company mainly distributes, wholesale, retails of bird's nest, sesame oil, biscuits and other food products to domestic and international market.
The company has always followed international practice, adhering to the "honour to the Contract, keep promises, quality service, mutual benefit and win-win results.

Primer worldwide sdn bhd

8.2B3-04(15)

Address: 马来西亚 Malaysia Kuala Lumpur.-Lingkaran SV3,Sunway velocity-Sunway velocity Phase 3-3c1
Tel: 0193228882
Email: ysng33@qq.com
Web:

本公司 Primer Worldwide Sdn. Bhd. 是一家马来西亚私营有限公司成立于2008年，公司主营燕窝等食品以国内外贸易、批发、零售为主。
本公司始终遵循国际贸易惯例,秉承“重合同,守信用、优质服务、互利双赢”的经营理念，通过贸易纽带紧密联结国内与国际市场，且与国内外多家知名公司建立了良好的合作关系。
Primer Worldwide Sdn. Bhd. is a Malaysia private limited company founded in 2008. The company mainly distributes, wholesale, retails of bird's nest and other food products to domestic and international market.
The company has always followed international practice, adhering to the "honour to the Contract, keep promises, quality service, mutual benefit and win-win results" business philosophy. The

AMECROWN HOLDINGS SDN BHD

8.2B3-04(11)

Address: 马来西亚 Malaysia SELANGOR-SHAH ALAM-NO 28, JALAN BULAN U5/172, SEKSYEN U5
Tel: +060378327908
Email: 965633025@QQ.COM
Web: www.amecrown.com.my

Amecrown Group, founded in 1999, we offer comprehensive one-stop service of product design, production, packaging and marketing programs. We have the most innovative technology and techniques to ensure product quality, safety, health certified byGMP, HACCP and ISO 22000 and Halal. Our primary mission is to meet our customers needs as the goal, we will do our best to satisfy our customers

Thousand Nest Trading Sdn. Bhd.

8.2B3-04(14)

Address: 马来西亚 Malaysia Kedah-Alor Star-No. 399, Ground Floor, Jalan Pintu Sepuluh off Jalan Putra, 05100
Tel: +6047339908
Email: chiahan87@gmail.com
Web:

Thousand Nest is one of the pioneers in promotion and distribution of Malaysia bird's nest. As both distributor and retailer, Thousand Nest emphasizes genuine, safe and high quality bird's nest. By having our own swiftlet Quality Control Department, Thousand Nest ensures a reliable source of bird's nest, which are carefully selected from our partners' swiftlet farms and processing centres.

GN NEUTRICEUTICALS SDN BHD

8.2B3-04(16)

Address: 马来西亚 Malaysia SELANGOR-SUBANG JAYA-NO.17, JALAN TP3,SIME UEP INDUSTRIAL PARK
Tel: +603-80116375
Email: 2846589896@QQ.COM
Web: www.gnhealthsolutions.com

GN Neutriceuticals Sdn Bhd began operation in 1992. Company was founded by Dr. Teow Sun Soo, a professor of Medical Microbiology with a Ph.D. in Genetic Engineering. GN Neutriceuticals is a leading producer of health supplements and probiotics with 20 years of advance knowledge in microbiobal technology. Our health supplements are well accepted by health care professionals and regularly market.

燕鸥国际有限公司 / Yan Ou Marketing (Intl) Sdn Bhd

8.2B3-04(17)

Address: 马来西亚 雪兰莪-吧生-Wisma Hai-O, Lot 11995, Batu 2, Jalan Kapar, 41400 Klang Malaysia Selangor-Klang-Wisma Hai-O, Lot 11995, Batu 2, Jalan Kapar
Tel: +603 33423322
Email: yokkiwong@yanou.com.my
Web: www.sarangyan.com

燕鸥创办人于一九一八年发掘经营燕窝，至今已有百年发展历史。燕鸥是一家结合燕窝采购、挑洗、深加工及销售为一体的四代燕窝家族机构。2016年初，燕鸥和马来西亚中药老牌之称的海鸥集团成立Sarangyan品牌。海鸥集团是马来西亚第一家挂牌上市的中华传统保健品集团企业，成立超过四十年。
Established in 1975 with its focus on complementary medicines (TCM), medicated tonic as well as wellness, beauty, healthcare products and clinical services.
First traditional healthcare company listed in Bursan Malaysia Security Berhad since 1996 Providing superior quality healthcare products.

UNITED TMC SDN BHD

8.2B3-04(20)

Address: 马来西亚 Malaysia SARAWAK-KOTA PADAWAN-NO45-46 1st FLOOR,10th MILE PENRISSEN ROAD
Tel: +86-18978924055
Email: ttchoon@foxmail.com
Web:

金婆罗燕窝来自马来西亚砂拉越州马来西亚联众有限公司（United TMC Sdn. Bhd.），公司专业生产和经营燕窝十几载，拥有自有燕屋和专业加工厂整条产业链，全程严密管控燕窝出品，不刷胶，不漂白，纯手工挑毛，所出品燕窝在马来西亚享有盛誉。广西金婆罗进口贸易有限公司是马来西亚联众有限公司在中国设立的代表处，于2015年在中国-东盟博览会永久举办地广西南宁注册成立，旨在将优质的金婆罗燕窝推广至全中国每个城市和地区。
Our Birdnest is from Sarawak,Malaysia. With good environment, produce pure & high quality nest. The birdnest using 100% hand plucking to remove all the impurity in cleaning process,no using any chemical agent to bleach and no adding any coloring and additives. We work hard at keeping our prices affordable to deliver maximum value and enjoyment to our customers.

Wyeth Nutritionals Ireland Ltd.

8.2B4-02

Address: 爱尔兰 Ireland Co. Limerick-Askeaton-Tom Deely
Tel: 86-21-62634616
Email: jennifer.chen@wyethnutrition.com
Web: www.wyethnutrition.com

For the past 100 years, Wyeth Nutrition has pioneered innovative nutrition science with premium-quality products that meet the needs of infants, young children and adults. In 2012 Wyeth Nutrition was acquired by Nestlé SA and operates as part of Nestlé Nutrition. Wyeth Nutritionals Ireland Ltd is a world class manufacturing plant producing super premium infant formula for local and global sale.

VISESHA MANUFACTURING SDN BHD

8.2B3-04(18)

Address: 马来西亚 Selangor Darul Ehsan-Puchong-No 19, Jln TPP 1/1A , Taman Industri Puchong, Batu 12, JLn Puchong Malaysia Selangor-Puchong-No 19, Jln TPP 1/1A , Taman Industri Puchong, Batu 12, JLn Puchong
Tel: +60380611199 / +603 80611199
Email: export@karta.com.my
Web: www.karta.com.my

我们是椰子产品专门公司。
是领先马来西亚和海外市场的椰子产品制造商与贸易公司。
我们专门生产椰浆粉,椰子水,椰子水汽泡果汁饮料,椰蓉,食用椰子油等椰子产品。
我们的产品拥有清真,与FSSC 22000认证。
We are coconut products specialist !
Over 20 years experiences in Coconut related product i.e Desiccated coconut /Coconut Water/ Coconut Paste/Virgin Coconut Oil/Coconut Cooking Oil/Coconut Cream/Coconut Cream Powder and Coconut Cream.
We exported to over 35 countries over the region of Asia/Europe/South Africa and Middle East. Our products are certified HALAL , KOSHER and FSSC 22000.

KS EASESOURCES (M) SDN BHD

8.2B3-04(21)

Address: 马来西亚 Malaysia SELANGOR-SUNGAI BULOH-Lot 9679E, Perindustrian Desa Aman , Batu 11, 47000
Tel: +603-6140 2660
Email: GALAXY0724@GMAIL.COM
Web:

KS EASESOURCES (M) SDN BHD ESTABLISHED SINCE 2016 WITH THREE YEARS RESEARCH AND DEVELOPMENT HELPED US TO ACHIEVE OUR GOAL OF PRODUCING A PORTABLE, CONVENIENT, SPEEDY AND WHOLESOME PRODUCT. OUR VISION IS TO BE THE LEADING MANUFACTURER AND INNOVATOR FOR HEALTHIER FOOD PRODUCTS AS WE BELIEVE THAT THIS IS THE NEXT FRONTIER FOR FOOD CONSUMPTION. WE ARE COMMITTED TO PROVIDING THE BEST PRODUCT.

SAILING PREMIUM FOODS

8.2B4-03(02)

Address: 希腊 Greece ATHENS-ATHENS-ATHENS
Tel: 021-57653337
Email: vivianling@sailingsh.com
Web:

Eco Farm Distribution Sdn Bhd

8.2B3-04(19)

Address: 马来西亚 Malaysia Selangor-Seri Kembangan-No.40, Jalan PBS 14/4, Taman Perindustrian Bukit Serdang
Tel: +60123285997
Email: asia.foodretailer@gmail.com
Web:

马来西亚燕窝工厂
Raw bird nest cleaning and processing plant, we also produce instant bird nest, raw bird nest source are from east malaysia, sarawak.

ASIA FOOD RETAILER SDN. BHD.

8.2B3-04(22)

Address: 马来西亚 Malaysia Selangor-Seri Kembangan-No.40, Jalan PBS 14/4, Taman Perindustrian Bukit Serdang
Tel: +60123285997
Email: asia.foodretailer@gmail.com
Web: www.dureeca.com

Asia Food Retail Sdn. Bhd. was established in 2011 and its one of the most accomplished food company in Malaysia. Specialising in it's core ingredient which is durian, we offers a wonderful range of durian base products.

雀巢 / Nestlé S.A.

8.2B4-01

Address: 瑞士 Switzerland Vevey-Avenue Nestlé 55
Tel: 8610 84347648 / +8610 84347648
Email: maggie.e@cn.nestle.com
Web: www.nestle.com.cn

雀巢是世界领先的食品饮料公司，致力于提升生活品质，贡献于更健康的未来。雀巢拥有2,000多个全球或区域性知名品牌，产品涉及乳制品、配方奶粉、咖啡、冰淇淋、巧克力、瓶装水、调味品，宠物食品等。公司总部位于瑞士。中国是雀巢集团第二大市场。
Nestlé is the world's leading food and beverage company committed to enhancing quality of life and contributing to a healthier future. Nestlé has over 2,000 global or regional brands. Its product range includes dairy, infant formula, coffee, ice cream, chocolate, bottled water, culinary, pet care and etc. Nestlé home office is based in Switzerland. China is its second largest market.

OLIVE BREEZE – TSIMPIMPAKIS MICHAIL

8.2B4-03(03)

Address: 希腊 Greece CRETE-IERAPETRA-KATHARADES
Tel: 0030 2842080164
Email: info@olivebreeze.gr
Web: www.tsimpimpakis@gr

Our company founded in 1991 in CRETE. We produce extra virgin olive oil, natural cosmetics from olive oil, and wine. After 2015 we packaging our olive oil under name OLIVE BREEZE and we produce the natural cosmetics from bio olive oil. From last year released on the market our wine TSIMPIMPAKIS P.G.I. CRETE.
OLIVE BREEZE extra virgin olive oil awarded with gold metal on EVO IOOC 2019.

Amphora

8.2B4-03(04)

Address: 希腊 Greece 1 Vasilikis Street, Aghia Irini Aquare
Tel: +30 211 0129116
Email: takiss@hellasg.com
Web: www.elaion.com

Amphora selects Greek high-quality healthy food, 100% original packaging, bringing to the world Greek high-quality, healthy products with the original Mediterranean flavour, so that every consumer can enjoy the healthy lifestyle and special food of the Mediterranean, and harvest the unique "Greek experience".

DOMAINE VAKAKIS

8.2B4-03(07)

Address: 希腊 Greece Samos-Megali Lakka
Tel: 075582752855
Email: liakos.konstantinos@hellenic-agora.cn
Web: vakakiswines.gr

Domaine Vakakis' main care is to highlight and promote Samos' unknown hidden wine treasures; therefore the winery focuses on the quality of the grapes and, of course, the vinification!

KTIMA PAVLIDIS

8.2B4-03(10)

Address: 希腊 Drama-Drama-Kokkinogia Greece Drama-Kokkinogia
Tel: +302521058300
Email: info@ktima-pavlidis.gr
Web: www.ktima-pavlidis.gr

In KTIMA PAVLIDIS we believe that great wines must reflect their terroir, vintage and personality. Our wines have a level of high quality always respecting the environment and by all means the final consumer. All our wines are highly awarded.

Strofilia Estate

8.2B4-03(05)

Address: 希腊 Greece Nemea-Corinthia-Asprokampos 20500
Tel: 0755-82752855
Email: mali@hellenic-agora.cn
Web: peloponnesewineroads.com/strofilia-estate

Our Strofilia winery in Asprokambos is located at the Stymfalia lake plateau, at an altitude of 800m. Featuring wine fermentation with grape capacity of up to 1,000 tons, this is the largest mountain winery in Greece. Here, we ferment both grapes from the Agiorgitiko variety to make our Protected Designation of Origin (PDO) NEMEA wine, and multiple variety grapes grown in Stymfalia and the neighbo

Miliarakis winery

8.2B4-03(08)

Address: 希腊 Greece Crete-Heraklion-Pesa Village
Tel: +30 2810741213
Email: mali@hellenic-agora.cn
Web: minoswines.gr

MINOS is in its eighth decade and produces wine from local varieties, such as Kotsifali and Mandilari for reds and Vilana, Vidiano and Thrapsiri for whites;

DIONYSOS SA

8.2B4-03(11)

Address: 希腊 Greece ATTIKI-ATHENS-VOULIAGMENIS AVENUE 178
Tel: +302109718420
Email: p.philios@dionyssos-wine.gr
Web: www.dionyssos-wine.com

Greek wine producer since 1936, with production capacity of 10.000.000 lt in PGI and PDO wines

KATSAROS DISTILLERY

8.2B4-03(06)

Address: 希腊 Greece Tinavos-Larisa National Road
Tel: +30 2410 831420
Email: mali@hellenic-agora.cn
Web: www.katsarosdistillery.gr

Tsipouro is tied to tradition and to the Katsaros Family, which has been preserving its recipe and its taste pure since 1856. The day of distillation is an actual celebration, an opportunity for everyone to enjoy themselves, to dance and sing.

Estate Chrisohoou

8.2B4-03(09)

Address: 希腊 Greece Naoussa-STRANTZA-Estate Chrisohoou
Tel: +30 2332 045080
Email: mali@hellenic-agora.cn
Web:

Chrisohoou庄园成立于1977年由Kimis Chrisohoou和他的妻子Betty在希腊Strantza Naoussas地区占地10公顷。如今，Estate Chrisohoou及其葡萄园位于海拔250米（825 英尺）的Vermion东南斜坡上，距离Naoussa——“葡萄酒与葡萄园之城”四公里。在葡萄园里种植的各种白色和红色葡萄品种，其中最着名的是“新马诺罗奥纳萨”，从1971年起就被认定为红色VQPRD葡萄酒。

Cooperative De Saran

8.2B4-03(12)

Address: 希腊 Greece Kozani-Krokos
Tel: 0030 24610 63283
Email: exports@safran.gr
Web:

Saffron Producers

Larissa Chamber of Commerce and Industry / Chamber of Larissa

8.2B4-03(13)

Address: 希腊 Greece Larisa-Larissa-Papakiriazi 44
Tel: +302410536900
Email: info@larcci.gr
Web: www.larissa-chamber.gr

Public Law Entity which has 16000 company members.

TACHA BROS CO / Tachas Bros C.O

8.2B4-03(14)

Address: 希腊 Greece LARISA-LARISA-ELEFTHERIO
Tel: +30 2410 549979
Email: info@taxas.gr
Web: www.taxas.gr

Company in central Greece that produces P.D.O. FETA and P.D.O. BIO FETA cheese, white cheeses from cow milk, yogurts, deserts and other cheeses...

MEDITERRANEAN ESCARGOTS

8.2B4-03(15)

Address: 希腊 LARISA-TYRNAVOS-11 K. LOYLE Str Greece LARISA-TYRNAVOS-11, K. LOYLE Str
Tel: +302411103048
Email: atgogas@gmail.com
Web: www.mediterraneanescargots.com

Through a 23-year old journey, Mediterranean Escargots has developed a reliable and effective model for the production of snails of high gastronomic value and special quality characteristics

Hippocratic Essentials P.C.

8.2B4-03(16)

Address: 希腊 Greece Greece-Larissa-Larissa, Greece
Tel: +306933355779
Email: d.billis@hippocraticessentials.com
Web: www.hippocraticessentials.com

Aromatic & Medicinal Plants Herbs & Essential Oils Pure, Clean and Natural 100%

Hellenic Dairies S.A.

8.2B4-03(17)

Address: 希腊 Greece Trikala-5km Trikala-Pili
Tel: +30 24310 61222
Email: k.ntasios@hellenicdairies.com
Web: www.olympusdairy.com

Everything started in the '50s, when the Sarantis family gradually turned a small village Dairy to No1 in SE Europe. OLYMPUS became a Greek market leader with presence in 47 counties, synonymous to top-quality and authentic Greek dairy products. Today our Group is No1 Feta Cheese producer in Greece owning 5 production plants in Balkans, and 11 commercial subsidiaries in Europe.

玛氏公司 / Mars Incorporated

8.2B4-04

Address: 美国 United States of America VA-McLean-6885 Elm Street
Tel: 13331152830
Email: anna.e@effem.com
Web: mars.com

Mars is a leading global food manufacturer and distributor with sales exceeding USD35 billion. Our brands include billion-dollar brands M&M's®, SNICKERS®, TWIX®, MILKY WAY®, DOVE®, PEDIGREE®, ROYAL CANIN®, WHISKAS®, BANFIELD® and VCA®.

Carrefour Asia Limited

8.2B4-05

Address: 法国 Hongkong-Hongkong-3101P, 02-03 And 05-06 31/F One Kowloon No.1 Wang Yuen ST Kowloon Bay KL France Île-de-France-Paris-93 Avenue de Paris，91889 Massy Cedex
Tel: 0086-021-38784500
Email: Shining_zhutingting@carrefour.com.cn
Web:

Carrefour Group, founded in 1959 and an inventor of the hypermarket concept, is one of major multinational retailers and Fortune 500 companies, operating nearly 10,000 retail stores in more than 30 countries and regions across the world. It's engaged in multiple business formats to provide various products and all-round services to customers.

麦德龙集团 / METRO GROUP

8.2B4-06

Address: 德国 Germany Nordrhein-Westfalen-Dusseldorf-Schluterstrasse 1
Tel: 862122078989 / 8621 22078989
Email: haibing.zhou@metro.com.cn
Web: www.metroag.de/en

麦德龙是全球领先的专业批发公司,致力于为酒店、餐厅等餐饮类客户，以及独立小型零售商提供专业的食品与非食品商品品类。在全球，麦德龙拥有约2400万专业客户，他们既能在麦德龙批发商场内采购，也能通过线上订购到线下商场提货或选择配送服务。麦德龙现购自运在全球35个国家拥有760多家批发商场及食品配送业务。

METRO is a leading international wholesale company specializes on serving hotels, restaurants, caterers and independent traders. Globally METRO has 24 million customers who can choose to shop in stores, order online and collect at the store or have them delivered. METRO wholesale operates in 35 countries with over 760 Cash & Carry stores and Food Service Distribution companies.

达能 / Danone

8.2B5-01

Address: 法国 巴黎-17, bd Haussmann-75009 France Paris-17,bd Haussmann-75009
Tel: 021-61798962
Email: athena.wang@danone.com
Web: www.danone.com

作为一家跨国食品饮料公司，达能把“通过食品，为尽可能多的人带来健康”作为企业使命。达能以高效、负责任和包容的方式经营，坚持以高标准推动业务发展，并致力于成为全球首批获得共益企业认证的跨国公司之一。

Dedicated to bringing health through food to as many people as possible, Danone is a leading global food & beverage company. Danone commits to operating in an efficient, responsible and inclusive manner; it holds itself to the highest standards in doing business, as reflected by its ambition to become one of the first multinationals certified as a B Corp.

Yashili New Zealand Dairy Co Ltd / Yashili New Zealand Dairy Co.,Limited

8.2B5-02

Address: 新西兰 New Zealand Yashili Drive Pokeno, New Zealand
Tel: 021668548
Email: david.song@yashili.co.nz
Web: yashili.co.nz

Yashili New Zealand Dairy Co., Ltd (Yashili New Zealand) was established in July 2012. The Yashili New Zealand plant boasts globally best-in-class facilities, utilising the latest technology and the finest automatic control systems. Temperature and humidity is controlled around the clock, guaranteeing stable production and ensuring reliable product quality.

Arla Foods amba

8.2B5-03

Address: 丹麦 Denmark Aarhus-Viby J-Aarhus Viby J Sønderhøj 14, 8260 Viby J
Tel: 13661286735
Email: qiaoxing@mengniu.cn
Web: www.arla.com

With more than 130 years experience of dairy production, Arla Foods has become the fourth largest dairy company in Europe and a leading organic dairy expert in the world. The company has established self-controlled production bases in 12 countries and sell milk, cheese and butter all over the world.

Milk New Zealand Dairy Limited

8.2B5-04

Address: 新西兰 奥克兰-肖特兰街48号Vero中心34层 New Zealand Level 34, Vero Centre, 48 Shortland Street, Auckland 1010
Tel: 021-80259588-851 / 021-80259855
Email: wuhuanhuan@thelandmilk.com
Web: www.milknewzealand.com

Milk New Zealand Dairy Limited为纽仕兰新云的海外全资子公司。阿里巴巴、上海鹏欣集团旗下大康农业、云锋新呈为纽仕兰新云的前三大股东。Milk New Zealand Dairy致力于打造集约化、数字化全球食品供应和品牌服务平台为中国新零售赋能。

Milk New Zealand Dairy Ltd. is a famous New Zealand Dairy company for its Theland brand at home and abroad. With "A Cow Per Acre" slogan based on globalization strategy, Theland created global resources from farm to table and whole digital value chain, setting up a new international benchmark for food safety.

Fonterra Co-operative Group Limited

8.2B5-05

Address: 新西兰 New Zealand Auckland-Hamilton-80 London Street
Tel: 59520605
Email: reno.lu@fonterra.com
Web: www.fonterra.com

恒天然集团是乳品营养的全球领导者。作为全球领先的乳品出口企业和牛奶加工企业之一，以及深受众多世界领先食品企业青睐的合作伙伴，其自有的乳品品牌在新西兰、澳大利亚、亚洲、非洲、中东以及拉丁美洲市场上也是佼佼者。

中国是恒天然集团最大且最重要的市场。恒天然在大中华区运营已超过40年，始终致力于将新西兰先进养殖技术及乳制品生产技术带到中国。

Fonterra is a global leader in dairy nutrition. As one of the world's leading dairy exporters and milk processors, and the preferred partner to many of the world's leading food companies, Fonterra is a market leader with its own dairy brands in New Zealand, Australia, Asia, Africa, the Middle East and Latin America.

大洋洲乳业有限公司 / Oceania Dairy Limited

8.2B5-06

Address: 新西兰 New Zealand Canterbury-Waimate-30 Cooneys Road, Morven
Tel: +64-(0)3 686 6403
Email: shane.lodge@oceaniadairy.co.nz
Web: oceaniadairy.co.nz

Oceania Dairy was established in response to a growing international demand for New Zealand milk powder.

Oceania Dairy is a registered dairy exporter and operates under a Ministry for Primary Industry approved Risk Management Programme for its raw milk collection, manufacture, storage and transport of final product.

Our products include dairy commodities, Infant Formula and UHT milk.

澳优乳业股份有限公司 / Ausnutria Dairy Corporation Ltd

8.2B6-01

Address: 香港地区 香港上环干诺道中168-200号信德中心招商局大厦36楼16室 Hong Kong Unit 16,36/F., China Merchants Tower, Shun Tak Centre, No. 168-200 Connaught Road Central, Hong Kong
Tel: 0731-84303698
Email: shengxin.luo@ausnutria.com
Web: www.ausnutria.com.hk

澳优成立于2003年9月，在全球范围内从事高端乳品及营养食品的研发、生产和销售。经过十几年的发展，公司现已发展成为一个在全球拥有完整产业链条的国际化企业。公司于2009年10月8日在香港联交所上市，是首家在港上市的婴幼儿配方奶粉企业。目前，澳优在全球共有10座工厂，旗下产品远销全球60多个国家和地区。

Founded in September 2003, Ausnutria is an international dairy enterprise with global whole industry chain. The company was the first infant formula company to be listed on HKEX on 8th October, 2009. With 10 factories, Ausnutria products have been sold to more than 60 countries and regions.

Valio Ltd

8.2B6-02

Address: 芬兰 Finland Helsinki-Helsinki-Meijeritie 6, 00370
Tel: + 86 21 3212 2110
Email: maggie.ma@valio.com.cn
Web: www.valio.com

Valio - over 100 years of exceptional quality from a farmer-owned dairy cooperative, we are the only dairy in the word with a heritage of Nobel Prize.

Today Valio is the bigest food exporter in Finland, to over 60 countries all over the world. As the most sustainable?company in finland, Valio's mission is to create well-being and taste sensations responsibly.

Together we can make life better.

Kendal Nutricare Ltd

8.2B6-03

Address: 英国 United Kingdom Cumbria-Kendal-Mint Bridge Road, Kendal, Cumbria, LA9 6NL, UK
Tel: 021-87858510
Email: 2650534847@qq.com
Web: www.kendalnutricare.com

Our company Kendal Nutricare is the only British made infant formula manufacturer and we are based near the beautiful Lake District National park. We have a strong heritage in the town of Kendal where our factory was built in 1962 by GSK. In 1994 it was bought by HJ Heinz .In 2015 Kendal Nutricare buought from Heinz. 2016 Kendamil launched in the UK, China and then globally.

JATENERGY LIMITED

8.2B6-04

Address: 澳大利亚 Australia VIC-MELBOURNE-Suite 306, 521 Toorak Road, Toorak VIC 3142
Tel: 0411552008
Email: wiltonyao@hotmail.com
Web: jatenergy.com

JAT是澳大利亚一家以投资和贸易为主营业务的上市公司。在澳交所代码为JAT。公司从2015年开始业务转型，涉足澳中快消品贸易。经过短短三年的努力，已经从简单的产品代理发展到拥有自主品牌和完整的产品供应链。今天JAT公司不仅拥有"高登考拉"、"纽瑞优"和"考特村"自主或合作品牌，而且部分产品已经在国内各大主要跨境或大贸平台以及线下的母婴店中销售。

Jatenergy Ltd (ASX: JAT) is a Asia-Australia trade specialist. The Company develops and markets a portfolio of in-house branded FMCGs. Jat is an emerging player within the flourishing Australian consumer goods export industry, with a strategic focus on innovative and nutritional products.

JAT's extensive network of Chinese business affiliations is a substantial source of opportunities.

Biostime France

8.2B6-05

Address: 法国 France Kleber-levallois Perret-105 Rue Anatole France FRANCE KLEBER 92300
Tel: +8618819456383
Email: fuchunting@hh.global
Web: hh.global

Biostime has a long-standing reputation for expertise in children' s nutrition. Developed and made in France, Biostime's high quality children's probiotics and infant milk formula are category leaders.

The a2 Milk Company Limited

8.2B7-01

Address: 澳大利亚 Australia NSW-McMahons Point-Level 4, Blues Point Road
Tel: 60319687
Email: robert@nongken.org
Web: www.thea2milkcompany.com

The a2 Milk Company mission remains the same: to pioneer the scientific understanding of the A2 protein type so more people can enjoy the nutritional goodness that only comes from real and natural milk.
The a2 Milk Company has products and trading activities in Australia, New Zealand, China, the US, UK and a number emerging markets in Asia.

OZFARM ROYAL PTY LTD

8.2B7-02

Address: 澳大利亚 Australia Victoria-Melbourne-Unit 11, 24-36 Camberwell Road, Hawthorn East
Tel: 0311-87088298
Email: roffer.bai@ozfarmdairy.com
Web: www.ozfarmroyal.com.au

Oz Farm is a proud Australian company that formulates nutritional milk powders for optimal health, vitality and development - for all stages of life.
Our milk is exclusively sourced from 100% Australian dairy farms – from Gippsland, in Victoria, Australia; recognised worldwide for producing the highest quality milk possible. Every cow is identified by the National Livestock Identification Scheme

New Zealand New Milk Limited

8.2B7-03

Address: 新西兰 New Zealand Auckland-Auckland-138 Pavilion Drive, Auckland Airport
Tel: 0512-57699557
Email: chenmo@nznewmilk.com.cn
Web: www.nznewmilk.com.cn

In 2014, NZ New Milk brought its own brand to the Chinese market to bring the purity and nutrition of New Zealand to Chinese babies. Guided by the needs of consumers, with strong technology, excellent quality, perfect service and qualification of professional team, New Milk has established its own sales network throughout the country of China.

Avalon Dairy Limited

8.2B7-04(01)

Address: 加拿大 Canada BC-Burnaby-7985 North Fraser Way
Tel: +1 6044560550
Email: info@avalondairy.com
Web: www.avalondairy.com

Avalon Dairy was established in 1906. It is the oldest dairy brand and the first organic milk brand in Canada. Also, Avalon is the first certified organic pasteurized low temperature milk brand from Canada which can be imported to China. When Queen Elizabeth visits British Columbia, she drinks only Avalon's standard unhomogenized milk, the kind where the cream still rises to the top.

sunrise(canada)holding co.,ltd

8.2B7-04(03)

Address: 加拿大 Canada bc-richmond-8877 odlin crescent
Tel: +1 604 727 4569
Email: treasuremake@gmail.com
Web:

Established in Vancouver, British Columbia, Canada, Sunrise (canada) holding co.,ltd provides import and export services to customers and businesses around the world. We have an extensive network of partnerships around the world to help you reach the North American, Asian and European markets. We have an efficient supply chain to ensure timely and economical products and services.

Kelsen Group A/S

8.2B8-01(01)

Address: 丹麦 Denmark Bredgade 27, 8766 Nr. Snede, Denmark
Tel: 18516159988
Email: jude_xu@campbellsoup.com
Web: kelsen.com/en-us/kelsen_group.aspx

Kelsen Group began life in 1933 as a small family bakery in Denmark. Our cookies are baked in Denmark using fine ingredients that are carefully selected for each cookie. Our two leading brands are Kjeldsens and Royal Dansk. Kjeldsens has been permitted to use the designation By Appointment to the Royal Danish Court since 2009 and Royal Dansk is recognized all over the world as the iconic Blue Tin.

Mille Food A/S

8.2B8-01(03)

Address: 丹麦 Denmark Hundested-Unovej 1 3390 Hundested Denmark
Tel: 60397849 / 0086 21 6039 7849
Email: danli.pan@millefood.com
Web: www.millefood.dk

Mille是一家来自丹麦的乳制品企业，奉行“运动，健康，快乐”的品牌理念。主营业务涵盖孕婴童食品及家庭健康。Mille旗下婴幼儿奶粉品牌——麦蔻和蜜儿乐儿深受消费者和渠道追捧。Mille始终严苛遵守并实行食品安全标准，致力于将丹麦、北欧、世界的健康和营养产品带给每一位孩子和家庭。
Mille is a dairy company from Denmark, specialising in infant formula and family wellness. Mille is complying with the strictest standards and regulations, and strives to provide consumers worldwide with safe and nutritious products.

Nordic Life Center

8.2B8-01(04)

Address: 丹麦 Denmark Silkeborg -Vejlsøvej 51 · DK-8600
Tel: 13702777117
Email: connie@nlcdenmark.com
Web: www.nordiclifecenter.com

Nordic Life Center brings exclusive Nordic Brands to quality conscious and spending eager Chinese middle class consumers. An attractive market of more than 100 million people that appreciates Nordic quality, production and raw materials.

DANISH SPECIALITY FOODS AAL DK A/S

8.2B8-01(05)

Address: 丹麦 Denmark North Denmark-STØVRING-HAGENSVEJ 18-DK-9530 STØVRING
Tel: +45 98372955
Email: erik@bresling.dk
Web:

Danish Speciality Foods, a company located in Copenhagen, capital city of Denmark, is the creator of Danisa butter cookies ("Danisa"). Danisa has been serving in many countries and regions in 5 continents with high quality and delicious taste. The Danish factory of Danisa is located in Stovring town, in the northern Denmark.

Jacobsens Bakery Ltd A/S

8.2B8-01(08)

Address: 丹麦 Denmark Hedensted-Nilanvej 1
Tel: +4576752730
Email: jos@jacobsens-bakery.dk
Web: www.jacobsens-bakery.com

Jacobsens Bakery produces exclusive and delicious Butter Cookies. All cookies are baked and packed in Denmark. The Butter Cookies are produced under own brands as well as private label brands.

Toms Group A/S

8.2B8-01(11)

Address: 丹麦 Denmark Copenhagen-Ballerup-Toms Alle 1
Tel: +4520199334
Email: jth@tomsgroup.com
Web: www.tomsgroup.com

Toms Group A/S is a world wide leader in production and distribution of Anthon Berg Liquor filled chocolate from Denmark. Anthon Berg is owned by Toms Group and was established in 1884. Anthon Berg chocolate is famous for its corporation with world leading liquor brand such as Remy Martin, Camus, Contreau, Jim Beam among others. We invite you to experience our high quality Anthon Berg chocolate.

Hyggegaard A/S

8.2B8-01(06)

Address: 丹麦 Denmark Copenhagen-Toldbodgade 49 A, 1253 København K
Tel: 004550101020
Email: hyggegaardas@gmail.com
Web:

DAKOFO

8.2B8-01(09)

Address: 丹麦 Denmark Copenhagen K-Borsen 0
Tel: +4529621025
Email: edh@dakofo.dk
Web: www.dakofo.com

Political organisation, representing the Danish Grain and Feed production and trade. Three of DAKOFOs members will be present, DLG, DLA and Copenhangen Merchants.

DNA Diagnostic A/S

8.2B8-01(12)

Address: 丹麦 Denmark Danmark-Risskov-Voldbjergvej, 14
Tel: +45 87323050
Email: jh@dna-diagnostic.com
Web: www.dna-diagnostic.com

DNA Diagnostic A/S is a privately owned Danish biotech company founded in 1992, specialized in the development of PCR and qPCR test kits for food safety, milk, animal and human health care.

Helsemin A/S

8.2B8-01(14)

Address: 丹麦 Denmark Copenhagen-vesterbrogade 6d.
Tel: +4533365201
Email: sam@helsemin.dk
Web: www.helsemin.dk

Helsemin及其集团连锁是北欧最早最知名的保健品连锁店及批发商。主营业务：零售，批发，代理及进出口。在北欧有实体连锁门店百余家，员工千余人，合作品牌超600个，商品种类超过10000种。其代理品牌NOVO VITA（诺和维他）为旗下最畅销保健食品品牌，受行业顶级专业人士和各大网红的推崇，是北欧标杆性品牌之一 Helsemin凭其业内广度、深度以及品牌影响力的绝对优势，致力在中国和北欧营养保健市场，寻求合作、资源互补。
Helsemin,as the oldest and one of the biggest group in health sector in Scandinavia, covering retail, wholesale, import and export. Among our top brands, NOVO VITA, has been highly recommended by experts, elevating it to an icon in the industry. Helsemin with its expertise and strong influence in the Scandinavia is looking for potential business partners and opportunities in China.

The Whole Company A/S

8.2B8-01(07)

Address: 丹麦 Denmark Koege-4600-Unionsvej 4
Tel: +4520735162
Email: kbj@twc.dk
Web: www.twc.dk

Danish food manufacturer within healthier food products.

Danish Crown A/S

8.2B8-01(10)

Address: 丹麦 Denmark Marsvej 43, 8960 Randers, Cvr. nr. 26 12 12 64
Tel: 13671571900
Email: FRAMI@danishcrown.com
Web:

Food Nation

8.2B8-01(13)

Address: 丹麦 Denmark København V-1620-Vesterbrogade 4A,4
Tel: 21286639
Email: miol@foodnationdenmark.dk
Web: www.foodnationdenmark.com

Public-Private partnership promoting Denmark as a food nation.

Milkadamia Pty Limited

8.2B8-02

Address: 澳大利亚 Australia NSW-Thornleigh-Unit 6, 3 Central Avenue
Tel: +61298474436
Email: jack.chen@rrandrr.com
jack@milkadamia.com.au
Web: milkadamia.com.au

Milkadamia is a macadamia nut based dairy alternative that is Australian grown and Australian made with macadamias sourced from our family farm and surrounding farms in North NSW, near where the macadamia tree originated. Milkadamia is available in 2 delicious flavours: Milkadamia Latte Da Barista, Milkadamia Unsweetened.

ABYAU黛物 / Dragon Development Group Pty. LTD

8.2B8-03

Address: 澳大利亚 Australia VIC-southbank-201B/158 City road
Tel: +61370161506
Email: bamboo@abyau.com
Web: www.abyau.com www.abyau.com.au

Dragon Development Group是一家澳大利亚以信息化为特征，集跨境电商、国际贸易、信息服务、商务咨询、品牌推广、产品销售、自媒体孵化，自营品牌于一体的外贸综合服务集团。
作为澳洲S2B2C业务模式的践行者和引领者，Dragon Development Group旗下设有ABYAU黛物、黛物酒业、AU1788、Apetccompany等独立生态链品牌矩阵，并有超过200+丰富的澳洲本土品牌资源、3000+主流及自媒体资源。
Marketer, distributor and brand owners of Australian and New Zealand products to China. Supply Chain manger using E-commerce platforms include Abyau.com and Abyau on Wechat and Alibaba. Brands include GOLP and APETCCOMPANY petcare and food; estate wine AU1788, Warramunda Estate and Churchill Wines. Professional Key Opinion Leaders are employed to match the products and consumer profiles.

Haage Joogid OÜ

8.2B8-04(05)

Address: 爱沙尼亚 Estonia Harjumaa-Tallinn-Pärnu mnt 232/9
Tel: +37253002809
Email: xenia.joost@haage.ee
Web: www.haage.ee

Haage Joogid OÜ was established in 2012. Specialized in producing non-alcoholic beverages from pure Estonian high-quality natural mineral groundwater.
Haage natural mineral water is naturally pure – it does not undergo any processing and no additives. It has been strictly controlled and has been granted the Certificate of Approval.

Bellamy's Organic Pty LTD

8.2B8-05

Address: 澳大利亚 Australia Victoria-Melbourne-Level 18, 60 Albert Road, South Melbourne VIC 3205
Tel: 13611833302
Email: cherry.ye@bellamysorganic.com.au
Web:

Founded in 2004 by a Tasmanian mother, Bellamy's Organic remains true to the founding mission: to make simple, nutritious, organic food, free from all the bad stuff. At Bellamy's Organic, we combine expertise in infant nutrition with science and premium organic ingredients to deliver a truly unique blend, that supports the healthy growth and development of your child.

Saku Brewery Ltd

8.2B8-04(01)

Address: 爱沙尼亚 Estonia Harjumaa-Saku-Tallinna mnt 2
Tel: +3726508469
Email: margus.masing@saku.ee
Web: www.saku.ee

Saku Brewery is the oldest and largest brewery in Estonia, producing not just beer but also wide range of other soft alcoholic drinks and non-alcoholic drinks.
Saku Brewery is part of the Carlsberg Group and also an export partner for 20 markets in the world.
Saku has an approximate annual turnover over 70 million Euros. The avarage number of employees is 350 people.

Tanker Brewery

8.2B8-04(06)

Address: 爱沙尼亚 Estonia Harju-Juri-Kesk tee 10a
Tel: +3726777270
Email: beer@tanker.ee
Web: tanker.ee

Tanker brewery began with three homebrewers' common hobby that grew out of control. Jaanis and Ryan brewed beer together in Jaanis' garage. Spending hours and hours tinkering with recipes and building up a growing fan base of friends and family. The idea of building a brewery was born.

Viplus Dairy Pty Ltd

8.2B8-06

Address: 澳大利亚 Australia Victoria-Toora-67 Toora Jetty Road
Tel: 1300847587
Email: pr@viplusdairy.com
Web: viplusdairy.com.au

Viplus Dairy is one of Australia's leading milk formula manufactures, specializing in a diverse range of high quality, nutritional dairy products. Our commitment to world leading quality products , combined with our focus on innovation and technology, all of which is underpinned by our location world class facility in Toora South Gippsland.

EBM GRUPP AS

8.2B8-04(02)

Address: 爱沙尼亚 Estonia Põhja-Tallinna linnaosa-Paljassaare tee 43B, Tallinn
Tel: +3726599040
Email: info@ebm.ee
Web: www.ebm.ee

The EBM Grupp AS is a terminal for transshipment, storage and pouring of vegetable oils. As of today, we are one of the most modern enterprises in this business in the Baltic states. We work with all types of vegetable oils and use the latest technologies and equipment. Quality and the safety of our products are the major priorities of EBM Grupp AS.

Ecotar OÜ

8.2B8-04(07)

Address: 爱沙尼亚 Estonia Harju county-Maardu city-Keraheina road 14
Tel: +3725050566
Email: kristjan@kamo.ee
Web: www.kamo.ee/china

Ecotar有限公司生产各种粮食产品。其产品主要材料为全麦大麦粉。本公司只选用高质量与安全部门认证原料，大部分材料原产地位于北欧。我们的工厂及制造过程已通过政府相关部门安全审查，得到批准认证。本公司提供长期合作机会。
Ecotar OÜ is a producer of different food products. Our main products are made from whole grain barley. In our products we use certified high quality raw materials, mostly full grain barley from north european fields. We use controlled and certified manufacturing processes. We offer long term cooperation to wholesalers.

Center for International Trade Expositions and Missions

8.2C1-01(01)

Address: 菲律宾 Philippines Metro Manila-Pasay-Golden Shell Pavilion, Roxas Boulevard corner Sen. Gil Puyat Avenue
Tel: +632 8312201 loc 304
Email: rmendoza@citem.com.ph
Web: centerforinternationaltradeexposition sandmissions

The Center for International Trade Expositions and Missions (CITEM) is the export promotion arm of the Philippine Department of Trade and Industry. It is committed to developing, nurturing, and promoting globally-competitive small and medium enterprises, exporters, designers, and manufacturers by implementing an Integrated Approach to Export Marketing.

Benevelle Corporation

8.2C1-01(02)

Address: 菲律宾 Philippines Davao City-Maya-Maya St. corner South Bay Road
Tel: +63 82 291 6194
Email: info@benevelle.com
Web: www.benevelle.com

Philippine company specializing in Organic, All Natural Food Products.
Products include: Organic Coconut Sugar, Organic Coconut Jam, Organic Extra Virgin Coconut Oil, Organic Coconut Flour, Organic Coconut Milk, Organic Banana Chips, Organic Coffee Beans and Organic Fresh Young Coconut

Department of Agriculture

8.2C1-01(04)

Address: 菲律宾 Philippines Metro Manila-Quezon City-Elliptical Road, Diliman
Tel: 925-3795
Email: felicitas_macam@yahoo.com
Web: www.da.gov.ph

The Department is the government agency responsible for the promotion of agricultural development by providing the policy framework, public investments, and support services needed for domestic and export-oriented business enterprises.

EXCELLENT QUALITY GOODS SUPPLY COMPANY

8.2C1-01(05)

Address: 菲律宾 Philippines Davao CIty-Matina Crossing-112 Mc. Arthur Highway, Bangkal
Tel: +63 2 313 6704
Email: infor@excellentquality.ph
Web: www.excellentquality.ph

Excellent Quality Goods Supply Co. is a company originated in Davao City Philippines. Our company distributes 7D Dried Mangoes internationally along with its other equally healthy and delicious products.
With our commitment to our vision in introducing world class Filipino products, Excellent Quality Goods Supply Co. ventures to introduce our very own brand of banana chips and continuously develop.

Eng Seng Food Products

8.2C1-01(06)

Address: 菲律宾 Philippines Philippines-Davao-575 Jacinto Ext.Cor.E.Quirino Ave.
Tel: 02-7116677
Email: toweryema@yahoo.com
Web:

This is done through high of maintaining good, healthy, best tasting food products. Our inhouse production department also maintains high quality standard in processing. In addition to quality food production, we also use imported food processing machineries which characteristically reflect our professional approach to good quality production.

Filifresh International Trading

8.2C1-01(08)

Address: 菲律宾 Philippines Metro Manila-Quezon City-Unit 9A6 , 9th Floor, Francesca Tower Scout Borromeo Corner Edsa
Tel: 063-02-3700552
Email: melwyn@qugao-cn.com
Web: www.qugao.com.ph

Filifresh supplies Premium quality bananas throughout the entire Chinese market. Filifresh is a Filipino owned "business enterprise/ company/trading company" based in Davao City Philippines. We are engaged in exporting agricultural product such as Cavendish Bananas.

Fruits of Life Inc.

8.2C1-01(09)

Address: 菲律宾 Philippines NCR-Quezon City-#8 Sto Nino St. Brgy San Antonio SFDM Quezon City, Philippines
Tel: 632-3720668
Email: pdelacruz@lipa.com.ph
Web: www.lipa.com.ph

Driven by our objective to cater to the customers' cravings for natural fruits and to satisfy the demands for a beverage that can supplement their active lifestyles. Fruits of Life, Inc. aims to provide a variety of quality products that comes from one of the richest natural source of nutrients for the human body, the Coconut.

JAMLA Corporation

8.2C1-01(10)

Address: 菲律宾 Philippines Cavite-Carmona-York Hill South Bldg, Mountview II
Tel: 02 9844174
Email: lpanopio88@yahoo.com
Web: jamlafood.com

JAMLA Corporation is a food manufacturing company built on tradition, quality, and trust. Our evolving practices of strengthening food products is what has helped JAMLA build a name for itself across the Philippines and beyond. At the core of it all is our Alfonso's Hot Chocolate Tablea. Our tradition of quality has spread into products such as Instant Arroz Caldo, Champorado, and more.

MAGSASAKANG PROGRESIBO MARKETING COOPERATIVE

8.2C1-01(11)

Address: 菲律宾 Philippines DAVAO DEL NORTE-SANTO TOMAS-PUROK 8, FEEDER ROAD 3
Tel: 082 228 3425
Email: edwin77@sotto.com
Web: notavailable

The Magsasakang Progresibo Marketing Cooperative (translated as "Progressive Farmers Marketing Cooperative") is an organization of growers of premium export-quality Cavendish bananas and cooking bananas. Our growers has over 20 years of experience of producing bananas that aligns with current good agricultural practices, current good manufacturing practices and other global standards.

MANCOCO FOOD PROCESSING INC

8.2C1-01(12)

Address: 菲律宾 Philippines OCCIDENTAL MINDORO-OCCIDENTAL MINDORO-IPC BUBOG SAN JOCSE OCCIDENTAL MINDORO
Tel: 4162533
Email: salesmancocofoodproducts@gmail.com
Web:

We are processing plant for food.

Pearlfoods International, Inc.

8.2C1-01(13)

Address: 菲律宾 Philippines Caloocan-B6 Bldg. A Social Homes Industrial Compound, Brgy. 172 Zabarte Rd.,
Tel: +63 2 2771148
Email: jmm.pearlfoods@gmail.com
Web: www.pearlfood.net

Pearlfoods International Incorporated is establish by people experienced in the international marketing for more than 20 years.
It is affiliated with the group who own's a successful manufacturing company, Green harvest Food Products who is producing fresh frozen fruits, vegetables, native delicacies and other frozen foodstuffs. Of which is in existence for almost 2 decades.

Primex Coco Products, Inc.

8.2C1-01(14)

Address: 菲律宾 Philippines New Manila-Quezon City-681 Aurora Blvd.,
Tel: (632) 656-7114
Email: marketingservices@primexcoco.com
Web: primexcoco.com

Since 1991, Primex Coconut Products, Inc. has been producing world-class, high-grade quality products. We are able to meet the growing demands of international customers, through our product expertise, investment in high-grade equipment and 6,000-strong committed staff. All these have made it possible for us to achieve global excellence year after year.

Tropicana Food Products

8.2C1-01(16)

Address: 菲律宾 Philippines Laguna-San Pablo-Km. 84 Maharlika Highway
Tel: +49 5620089
Email: coconutph@yahoo.com
Web: www.coconutking.ph

Tropicana Food Products, Inc. was founded in 1975 since then it has expanded to become one of the most diversified and most integrated coconut product processor in the world. All TFPI ccoconut products are produced from 100% in-house freshly opened coconuts.

Phil. Morinda Citrifolia, Inc.

8.2C1-01(17)

Address: 菲律宾 laguna-los baños-9628 taal street, umali subdivision, batong malake,los baños, laguna, philippines 4030 Philippines laguna-los baños-9613 taal street, umali subdivision, batong malake,los baños, laguna, philippines 4030
Tel: +63 49 536-7180
Email: rowell_rr@yahoo.com
Web: philnoni.com.ph

Phil Morinda Citrifolia, Inc. produces PhilNONI, an all-natural noni juice. Our product is made from well-ripened noni fruits from all selected sites throughout the country.
PhilNONI is an HERBAL SUPPLEMENT manufactured and distributed by Phil. Morinda Citrifolia, Inc. in the Philippines. It is an Antioxidant, Immune System Booster, Energy Enhancer, Digestion and Fiber Source, Multi-Min & Vit

Philippine Franchise Association

8.2C1-01(18)

Address: 菲律宾 Philippines Metro Manila-Pasig City-Unit 701 OMM Citra Bldg San Miguel Ave. Ortigas Center
Tel: +6326870365
Email: pfa@pfa.org.ph
Web: www.pfa.org.ph

The Philippine Franchise Association (PFA) is the voluntary self-regulating body for franchising in the Philippines. It is the country's pioneer and largest franchise association with members ranging from micro to large, both homegrown and international involved in food, retail, services and other types of businesses.

Team Asia Corporation

8.2C1-01(19)

Address: 菲律宾 Philippines NCR-San Juan-430 Lt. Artiaga St. Corazon de Jesus
Tel: +632 7234460 to 64
Email: tjbjimmy@hotmail.com
Web: www.tacphils.com

Team Asia Corporation holds a strong leadership position and is one of the leading manufacturer and supplier of health and lifestyle products in Asia. Team Asia is well-known globally for its Supercoco Virgin Coconut Oil (VCO) which is an all-natural pure coconut oil from the world's largest coconut-producing country, the Philippines.

W.L. FOOD PRODUCTS

8.2C1-01(23)

Address: 菲律宾 Philippines METRO MANILA-VALENZUELA CITY-NO. 8 FURONG STREET, PUNTURIN
Tel: 632-9850140
Email: executive@wlfoods.com.ph
Web: www.wlfoods.com.ph

W.L. FOOD PRODUCTS est. in August 1986, one of the biggest snack food manufacturers in the Philippines, and the biggest roasted/fried green peas and corn snacks manufacturer in Asia. From small beginnings, the company grew under the strong efforts and belief of its founder William Lim that "quality product is the key to success", as well as its vision "to become the leader in the snack food manufa

22 PROPACK ASIA CORPORATION

8.2C1-01(24)

Address: 菲律宾 Philippines ORIENTAL MINDORO-PINAMALAYAN-BRGY. MARFRANCISCO
Tel: 02 4631015
Email: 22propack.asia@gmail.com
Web: 22propackasia.wix/22pac

Family owned company that produces, premium quality products from the Philippines.

Ahya Coco Organic Food Manufacturing Corp.

8.2C1-01(25)

Address: 菲律宾 Philippines Davao City -DWTC Building, Porras St. Barrio Obrero
Tel: +63 (082) 2211610
Email: info@ahyacoco.com
Web: ahyacoco.com

Ahya Coco Organic Food Manufacturing Corp. (Ahya) is about nature, people, and technology, harmoniously working together in the pursuit of giving healthier choices for consumers all over the world.
We have the edge. The processing plant is situated in a watershed area where pure and clean water is in abundance.

Century Pacific Food Inc. (CPFI)

8.2C1-01(27)

Address: 菲律宾 Philippines METRO MANILA-Pasig-8F Centerpoint Bldg., Garnet Rd, Ortigas
Tel: (02)633-8555
Email: DSEVILLA@CENTURYPACIFIC.COM.PH
Web: www.centurypacific.com.ph

Century Pacific Food Inc. is primarily engaged in the business of buying and selling, processing, canning and packaging and manufacturing all kinds of food and food products, such as but not limited to fish, seafood and other marine products, cattle, hog and other animals and animal products, fruits, vegetables and other agricultural crops and produce of land, including by-products thereof.

D' Farmer's Market Fruit & Pastries Center

8.2C1-01(28)

Address: 菲律宾 Philippines Davao del Sur-Davao City-Pryce Park Drive cor. F. Torres St., Bajada
Tel: +63 82 225 4861
Email: info@dfarmersmarket.com
Web: www.dfarmersmarket.com

Producer/grower and exporter of frozen and fresh durian, mango; frozen pineapple, banana, papaya and guava.
Current Market: Local Phil. And Japan.

Fisher Farms, Incorporated

8.2C1-01(29)

Address: 菲律宾 Philippines Metro Manila-Pasig City-16/F, Unit 1610, West Tower, Philippine Stock Exchange, Exchange Road Ortigas Center
Tel: 632-5849719
Email: ijmadarang@fisherfarms.ph exports@fisherfarms.ph
Web: www.fisherfarms.ph

Fisher Farms, Inc. (FFI) is the leading supplier and food processor of aquacultured seafood products in the Philippines. Making healthy eating tasty and easy drives Fisherfarms to create innovative products from milkfish, taken only from the bountiful harvests of the clear, blue waters of the Philippines; and vannamei shrimps, farmed and meticulously cared for by local people with a long traditio.

GSL PREMIUM FOOD EXPORT CORP

8.2C1-01(30)

Address: 菲律宾 Philippines LAGUNA-SAN PABLO-THE COCO PALACE HOTEL COMPOUND, KM 83 MAHARLIKA HIGHWAY, CALIHAN
Tel: +63 49 5627587
Email: gslpremium@elcoco.com.ph
Web: www.elcoco.com.ph

Manufacturer of Banana Chips and RDB Coconut oil.

MAGICMELT FOODS INC.

8.2C1-01(31)

Address: 菲律宾 Philippines CEBU-CEBU CITY-BANGCAL, LAPU LAPU
Tel: 6332-4958903
Email: gracedti2012@gmail.com
Web: www.magicmelt.com

A multi diversified manufacturing company in various bakery and confectionery food products, a leading manufacturer in the competitive market. Magic Melt is a premier producer of special Filipino breads, pastries and delicacies that is well loved by Filipinos in the Philippines and the world.

Pixcel Transglobal Foods Inc.

8.2C1-01(32)

Address: 菲律宾 Philippines Metro Manila-Pasig-Rm 514 5/F West Tower PSE Center Exchange Road
Tel: +6327061151
Email: ricblanca50@yahoo.com
Web: www.pixceltransglobal.com

PIXCEL TRANSGLOBAL offers only the finest Filipino food products. The company traces its origins to the year 1982, when it started manufacturing fish sauce (patis) under the name Florence Food Corporation. Today it has become one of the leading consolidators of Filipino products for the export market, serving as a "one-stop shop" for the overseas Filipinos.

Monde Nissin Corporation

8.2C1-01(33)

Address: 菲律宾 Philippines Metro Manila-Makati-21st flr., 6750 building, Ayala Ave.
Tel: +632 7597504
Email: jannuela.victorino@mondenissin.com
Web: www.mondenissin.com

For more than two decades now, Monde Nissin has steadily and aggressively risen to be the Philippines' leading food manufacturer and is currently carving its niche as one of the most competitive players in the global industry. From its first biscuit, Monde Nissin Corporation has evolved into a premier food company, which has been among the Philippines' top 100 companies since the year 2000.

New Asia Oil, Inc

8.2C1-01(34)

Address: 菲律宾 Philippines Davao del Sur-Davao City-Cuaco Road Barrio Pampanga
Tel: (082) 2340692
Email: cherielynntan@newasiaoil.com
Web: www.newasiaoil.com

New Asia Oil, Inc was established on May, 1990. Its primary purpose is to manufacture and export Crude Coconut Oil (CNO) that is competitive in both price and quality for international market standards.
The company grew over time and was able to expand and venture into other coconut products such as Refined Coconut Oil (RBD), Coconut Fatty Acid Distillate (CFAD), and Copra Expeller Meal

Year Luck Food and Industrial Corporation

8.2C1-01(35)

Address: 菲律宾 Philippines (other)-Pasig City-Sunny Realty Compound A. Sandoval Ave. Pinagbuhatan
Tel: +63-2-628-36-89
Email: joanne_tan@yearluck.com
Web: www.yearluck.com

Roxas Sigma Agriventures, Inc.

8.2C1-01(38)

Address: 菲律宾 Philippines Makati-101 Aguirre St. Legaspi Village
Tel: +638108901
Email: king.suhr@roxassigmaagri.com
Web: www.roxassigmaagri.com

THE FIRST-OF-ITS-KIND INTEGRATED COCONUT PROCESSING PLANT Roxas Sigma Agriventures Inc. is set to become the premier supplier of consistent, high-quality processed coconut products in the Philippines. With our state-of-the-art integrated processing facility and expected to become one of the world's leading exporters of: Aseptic Coconut Cream & Milk, VCO and Coconut Water Concentrate.

S&W Fine Foods International Ltd

8.2C1-01(39)

Address: 菲律宾 Philippines Taguig-Bonifacio Global City-JY Campos Centre, 9th Avenue corner 30th Street
Tel: 8562888
Email: RebollidoSA@swpremiumfood.com
Web: www.swpremiumfood.com

S&W Fine Foods International was acquired by Del Monte Pacific Limited (DMPL) last 2007, bringing together two leaders of quality canned food. Founded in 1896, S&W has grown from a simple idea to become a name known worldwide for quality and taste. From packaged fruits, vegetables, tomatoes and beans to sauces, it has been a part of great meals for generations, bringing healthy and nutritious food.

SL AGRITECH CORPORATION

8.2C1-01(42)

Address: 菲律宾 Philippines MAKATI CITY-2302 STERLING PLACE
Tel: 632-8137828
Email: lizapguinto@gmail.com
Web: www.sl-agritech.com

SL Agrifood / SL Agritech Corporation prides itself of its heritage and aspires to deliver on its promise to bring to the market superior fresh and processed agriculture products either under its own brands or co-branded partnerships and provide sustainable business to local growers and manufacturers. Products includes Fresh Cavendish banana, pineapple , hybrid rice, snack foods.

MONDE M.Y. SAN CORPORATION

8.2C1-01(48)

Address: 菲律宾 RIZAL-CAINTA-534 GRACIA STREET, BRGY. STO DOMINGO, CAINTA RIZAL Philippines RIZAL-CAINTA-534 GRACIA STREET, BRGY. STO DOMINGO
Tel: +63495081156
Email: shiela.olfato@mondemysan.com
Web: www.mysan.com.ph

We are manufacturer of biscuits and cookies since 1935. We have 2 factories, both are FSSC and Halal Certified. We export our products to more than 40countries.

San Miguel Foods

8.2C1-01(49)

Address: 菲律宾 Philippines Metro Manila-Pasig City-100 E. Rodriguez Jr. Avenue, Barangay Ugong
Tel: +6323175362
Email: rcabling@sanmiguel.com.ph
Web: www.sanmiguelpurefoods.com

San Miguel Foods is the largest and most diversified Food Company in the Philippines with a vertically integrated farm-to-plate business model that cuts across the entire food value chain. Home to some of the most recognized Philippine brands – Purefoods, Magnolia and La Pacita, San Miguel Foods has developed strong brand recall with products that cater to the evolving needs of consumers.

See's International Food Manufacturing Corp.

8.2C1-01(50)

Address: 菲律宾 Philippines Davao del Sur-Davao City-Km. 22 Budbud Bunawan
Tel: +6329122777
Email: sales@seesintl.com
Web: www.bananachips.com.ph

See's International Food Mfg. Corp. prides itself for being a global proponent of quality Philippine-made food products particularly Banana Chips. With more than 20 years of experience in the export industry, the company has maintained its reputation as one of the leading exporters of Banana Chips to key cities throughout the world through its strict adherence to International Food Standards.

A D HUA DER TUR ZM GIDA TARIM N AAT SAN. VE T C. LTD. T

8.2C1-02(02)

Address: 土耳其 Turkey ISTANBUL-Yenido an mah.49/3 sk.No:3 ÇKAPI no:22 Zeytinburnu/ stanbul
Tel: +902125580915
Email: gulen.oray@hotmail.com
Web:

We are wholesaler, exporter-importer for various goods.

ALTAS OIL INDUSTRY

8.2C1-02(03)

Address: 土耳其 Turkey DURUGOL MAH SOYA CAD NO:150, 52200 ALTINORDU/ORDU - TURKEY
Tel: +904527771777
Email: ilkerkirci@altas.com.tr
Web: www.cotanak.com.tr

ALTAS OIL INDUSTRY IS A MANUFACTURER OF HEALTHY SPECIAL EDIBLE OILS AND PASTES. WE PRODUCE HAZELNUT, WALNUT, SAFFLOWER AND SUNFLOWER OILS AS HEALTHY OILS AND SUGAR FREE, ADDITIVE FREE HAZELNUT AND PEANUT PASTES AND CHOCOLATE HAZELNUT SPREADS.
WE ALSO ADD TOP QUALITY FLOWER HONEY IN OUR PRODUCT RANGE.

Atakey Patates Gıda San Tic A.S.

8.2C1-02(05)

Address: 土耳其 Turkey ISTANBUL-Be ikta - Dikilita Mah. Emirhan Cad. no:109 k:11
Tel: +90 (272) 223 54 55
Email: sdegirmenci@atakey.com.tr
Web:

AtaSancak Tarim Isletmesi San.Tic. A.S.

8.2C1-02(06)

Address: 土耳其 Turkey Turkey-Denizli-Ucari Mahallesi Acipayam
Tel: +902585368257
Email: ilkerkocaer@atasancak.com.tr
Web: www.atasancak.com.tr

Atasancak is businness on a dairy farm and products which are 180 ton / day raw milk and 50 ton / day SMP and butter.

AYHAN SEZER OIL & FOOD INDUSTRIES TRADING LTD.

8.2C1-02(07)

Address: 土耳其 Turkey ISTANBUL-AKMERKEZ RESIDENCE KULTUR MAH. ADNAN SAYGUN CAD. ULUS YOLU NO 3 D 532-533
Tel: +902126400388
Email: hasanekin@ayhansezer.com.tr
Web: www.ayhansezer.com.tr

Ayhan Sezer Oil and Food Ind. Trading Ltd. established by Ayhan Sezer upon his experiences in order to carry on business in the fields of trade and industry in 1997. The company adopt providing safe, healthy, quality and economical products as a principle based on his pacesetter stance, innovator understanding and being a model firm in the field old vegetable oil industry.

BALSU GIDA SANAY VE T CARET A. .

8.2C1-02(08)

Address: 土耳其 Turkey BEYKOZ-ISTANBUL-PA ABAHÇE MAH. CEMALBEY SOK. NO:11/1
Tel: 90 216 425 32 00
Email: anic@balsugida.com
Web: www.balsugida.com

Balsu is the largest Turkish independent exporter and world's 2nd largest hazelnut processor with a strong global presence. As a family company, it was established in 1979 and has been serving to top tier chocolate and confectionary industry including top 10 global hazelnuts users since then. (c.95%of the production) to more than 36 countries across the world in all continents.

BARAN TEKSTIL TAS GIDA TIC. LTD STI.,

8.2C1-02(09)

Address: 土耳其 Turkey Istanbul-Istanbul-Nakiye Elgun Sokak No. 4 / A, Osmanbey
Tel: 00902123211818
Email: baranfoods@rodergroup.com
Web: www.hypnoenergydrink.com

HYPNO Energy Drink is the brand of Baran Teks Das Gida Tic. Ltd. Sti., based in Istanbul, Turkey. Hypno Energy Drink is exported from Turkey to about 30 countries around the World including Mongolia near China. The Product is liked and admired by the end consumers because of its unique taste, Excellent quality and reasonable price.

CAKRAN GIDA VE YAG SAN. ITH. IHR. PAZ. LTD. STI.

8.2C1-02(10)

Address: 土耳其 Turkey Hatay-YAVUZ SEL M CAD. ZÜHT YE ÖKTEN HANI B BLOK NO: 25 / 15
Tel: 00903262281986
Email: info@cakrangida.com
Web: www.cakrangida.com

Çakran Gıda has been successful in exporting to many countries in the Middle East, Asia and America continents and continues to add new countries and customers to its customer portfolio day by day. Our company is always developing, changing and growing trade sector in accordance with the requirements of the era with the highest quality products, customers and continues its services in this way.

Calik Insaat A.S.

8.2C1-02(11)

Address: 土耳其 Turkey Istanbul-Buyukdere Cad. No.163 Esentepe-Sisli
Tel: +902123065513
Email: saule.sungar@clkworld.com
Web:

CLK representing Calik is established in 2017 to provide trade services to customers in the region of Central Asia, Turkey, Europe and China on the modern Silk Road. CLK is operating in Logistics, Procurement and Trade.
CLK aims to make the trade along Silk Road diverse, fast, reliable and advantageous.

爱勒德商贸有限公司 / ELED DERI OTO YEDEK PARCA TURIZM VE INSAAT DIS TICARET LIMITED SIRKETI

8.2C1-02(13)

Address: 土耳其 Turkey stanbul-Zeytinburnu-Yenido an Mah.45/3.SK.15B
Tel: 15010510980
Email: trelednicole@gmail.com
eledtrade@hotmail.com
Web:

Eled company is located in Istanbul，Mainly engaged in fur, food (honey, olive oil, dried figs).

Elite Naturel Organik Gida San ve Tic. A.S.

8.2C1-02(14)

Address: 土耳其 Turkey Ankara-Mustafa Kemal Mah. 2159. Cd. Duru Ap. 6/8 Sogutozu-Cankaya
Tel: +90-312-219-8095
Email: btuzmen@elitenaturel.com
Web: www.elitenaturel.com

Leading organic not-from-concentrate juice and puree manufacturer in Turkey. All products are free from added sugar, colorant and preservatives.

Istanbul Furniture, Paper and Forestry Products Exporters Association / stanbul Mobilya, Ka ıt ve Orman Ürünleri hracatçıları Birli i

8.2C1-02(15)

Address: 土耳其 Turkey Not required for this country- stanbul-Dı Ticaret Kompleksi C blok Yenibosna
Tel: 00902124540554
Email: agac@iib.org.tr
Web: www.iib.org.tr/tr

伊兹密尔商会 / zmir Chamber of Commerce

8.2C1-02(16)

Address: 土耳其 Turkey zmir-Konak-Ataturk Cd. No: 190
Tel: 00902324984109
Email: sila.ozsumer@izto.org.tr
Web: www.izto.org.tr/en

Izmir Chamber of Commerce which was founded in 1885 has 130 years of history and more than 70 thousand members. The Chamber is one of Turkey's most powerful and long established institution. Izmir Chamber of Commerce executes many activities in order to increase its members' trade, development. We attach great importance to foreign trade and foreign investment for the development of our members.

Blacksea Hazelnut Exporters' Association / Karadeniz hracatçı Birlikleri-Blacksea Hazelnut Exporters' Association

8.2C1-02(17)

Address: 土耳其 Turkey Giresun-Ataturk Bul. No:19/E
Tel: +904542162426
Email: toramanoglus@kib.org.tr
Web: www.kib.org.tr

Today, 70% of the world's hazelnuts are produced in Turkey where quality is superior and supply is steady. From harvest to production, Turkish Hazelnuts are handled with the upmost care and held to the highest processing standards. Thanks to their state of art processing plants, our members are proud to have been supplying finest quality hazelnuts to all over the world.

MARGE / MARGE MADEN ARASTIRMA GEL. YAT. DA. V. HI.IT.IH.LT.ST.

8.2C1-02(18)

Address: 土耳其 Turkey IZMIR-ISMET KAPTAN MAH. SEZER DOGAN SK. NO:10 K:4 D:42
Tel: +90 232 483 5225
Email: sinan@marge.com.tr
Web: www.marge.com.tr

Marge has been exporting mainly olive oil to Spain, Italy and U.S.A. since 2017. We were the 7th largest exporter of olive oil in Turkey in 2017 and 6th in 2018. Appreciating the healthy and vast choice of food products of Turkey, we are expanding our business adding new products such as sunflower oil, dried fruits, nuts and various herbs and spices.

OZGUR TARIM URUNLERI INSAAT SANAYI VE TICARET A.S.

8.2C1-02(19)

Address: 土耳其 Turkey MANISA / SARUHANLI-ISTASYON MAH. KUVAYI MILLIYE CAD. N:7, 45800
Tel: 0090 236 357 4953
Email: export@ozgurfoods.com
Web: www.ozgurfoods.com

Ozgur Tarim AS is founded at Saruhanli - Manisa in 1994 where the most quality seedless grapes have been grown. The company is active in the dried fruit section, however produces only TURKISH SEEDLESS DRIED SULTANAS / RAISINS. Major Export markets are China, Japan, the UK, Germany, the Netherlands, Belgium, Italy, France, Canada, Australia, Singapore, Pakistan, Kenya...

SOYYIGIT GIDA SAN VE TIC AS - KENT BORINGER

8.2C1-02(22)

Address: 土耳其 Turkey ISTANBUL-ISTANBUL-AKCABURGAZ MAH.3106 SOK. NO:3 ESENYURT
Tel: +902128863200
Email: export@soyyigit.com.tr
Web: www.soyyigit.com.tr

Soyyi it Group exports its products to 136 countries.
Powder Foods : Boullions, Soups&Seasonings, Baking Ingredients, Desserts, Cake Mixes, Flours and starches, Powder Drinks: Hot Drinks, Cold Drinks, Coffies, Oils : Sunflower Oil, Corn Oil, Olive Oils, Vegetable Oils.
Patisserie: Sugar Pastes, Syrups, Topping Sauces, Cream and Fruit Fillings, Cold Pastry Jellies, Hot Pasrty Jellies.

TRADE TURK GIDA YATIRIM A.S.

8.2C1-02(23)

Address: 土耳其 Turkey BALIKES R-Altıeylül-Plevne Mah. 261.Sk. No:2/A
Tel: +9 0266 221 21 50
Email: ismailugur@yahoo.com
Web: www.kazorijinal.com

From China all the way to Turkey, our journey lead us to Mount Ida where legend lives and beauty abounds. The springs of Mount Ida, nicknamed "Kaz" Mountain, spill over the ancient region of Troy in Turkey and trickle throughout the pages of history.

YA AR DONDURMA VE GıDA MADDELERI A. .

8.2C1-02(25)

Address: 土耳其 Turkey Istanbul-Barbaros Mh. Evren Cd. Kayacan Sk. No: 6 Yenisahra
Tel: 86-13580330425
Email: Jolin.sun@163.com
Web:

The MADO ice cream, a very known brand in Turkey as well as internationally, has a long history for making ice cream, going back to 1850s.
MADO is the flagship of YA AR DONDURMA VE GıDA MADDELERI A. ., and it is the biggest ice cream producers of Turkey by incorporating advanced innovations.

Istanbul Chemicals and Chemical Products Exporters' Association (IKMIB)

8.2C1-02(26)

Address: 土耳其 Turkey Sanayi Caddesi Cobancesme Mevkii Dis Ticaret Kompleksi No:3 A Blok Yenibosna/ Bahcelievler
Tel: +902124540000
Email: seyma.inam@immib.org.tr
Web: www.ikmib.org.tr

Istanbul Chemicals and Chemical Products Exporters' Association (IKMIB) is a professional establishment which deals with all of the export activities of its members. The main aim of the Association is to increase the export volume of Turkish Chemicals and Chemical Products Sector. IKMIB bolsters its members in the national and international level via different activities.

TARIM KRED B RL K TARIM ÜRÜNLER HAY.AMB.PET.NAK. TH. HR.SAN.VE T C.A. .

8.2C1-02(27)

Address: 土耳其 Turkey ANKARA-Ehlibeyt Mh. Ceyhun Atuf Kansu Cd. No:100/54 Çankaya / ANKARA
Tel: +90 (312) 213 98 05
Email: export@tarimkredibirlik.com.tr
Web: www.tarimkredibirlik.com.tr

Tarim Kredi Birlik Corp. cooperates all of the foodstuff procurements, production and sales operations of ACC with legumes factory, sunflower oil refinery, olive-olive oil facility, milk factory and almond-pistachio facility. In all these facilities Birlik Corp. produces 100% natural products with no additives and makes them ready for final consumption.

IŞIK TARIM ÜRÜNLERI SANAYI VE TICARET A.Ş

8.2C1-02(30)

Address: 土耳其 Turkey Kemalpa a/ zmir,-Ören 75.yıl Cumhuriyet Mah. Ova sokak. No:9, 35733
Tel: +902328748128
Email: sezgin@isiktarim.com
Web: www.isiktarim.com

We are a leading manufacturer, packer and exporter of Organic Dried Fruits, Frozen Fruits & Vegetables and Nuts in zmir, Turkey. Every year, we export to more than 30 different countries spreading from Europe to Japan in the far east, from Australia to the USA and Canada, in the far west.

MND KAHVALTILIK GIDA SAN. VE TIC

8.2C1-02(31)

Address: 土耳其 Turkey Kahramankazan-Ankara-Istanbul yolu 33.km Bitik Koyu gırısı no.1
Tel: 00903128145590
Email: bekir.ogul@mndgida.com.tr
Web: www.mndgida.com.tr/en

ESTABLISHED IN ANKARA IN 1984, MND GIDA IS ONE OF THE LEADING PRODUCERS OF BREAKFAST FOODS IN TURKEY LOKMAN, PRODUCE; JAMS, HONEY, HAZELNUT CREAM, CHOCOLATE SPREAD, HALVA, PEANUT BUTTER, TAHINI, MOLASSES, CHEESE, OLIVE

Louis Dreyfus Company B.V.

8.2C2-01

Address: 瑞士 Switzerland Genève-29, route de l' Aéroport, 1215
Tel: +86 13426349596
Email: derek.ren@ldc.com
Web: www.ldcom.com

Louis Dreyfus Company is a leading merchant and processor of agricultural goods, leveraging global reach and extensive asset network to deliver for its customers around the world, – safely, responsibly and reliably.

法国农业食品委员会 / CAFC – Conseil Agro-alimentaire France – Chine

8.2C2-02

Address: 法国 France PARIS-PARIS-42 RUE DE CHATEAUDUN
Tel: +86(0)10 8418 5286
Email: bei.li@cafc-agrofrance.com
Web:

法国农业食品委员会是由法国国家乳制品行业协会和法国果蔬跨行业理事会联合组建的非营利行业机构。其使命是加强中法两国农业食品方面的行业对话，促进两国政府及行业协会间的信息互通，以及企业间的贸易互惠。
法国农业食品委员会的主要工作是促进和推动法国乳制品和新鲜的蔬菜水果在中国市场的发展。通过与法国驻华大使馆及中法两国政府及行业机构紧密联系与合作，以更好地满足中国市场和消费者对法国农业食品的期待。
CAFC is an association, non-profitable, jointly organized and formed by the French Dairy Association and the French Fruit & Vegetable Association. Its mission is to strengthen the Sino-French industrial contacts and to facilitate the information exchange for the two governments and their industrial associations, as well as the trade reciprocity among their enterprises.

法国猪业联盟&法国畜牧及肉类协会 / Inaporc

8.2C2-03

Address: 法国 巴黎-5 Rue lespagnol France Paris-5 rue lespagnol
Tel: 0033144936000
Email: fanye.meng@inaporc.cn
Web: www.leporc.com
www.interbev.fr

法国猪业联盟&法国畜牧及肉类协会为法国猪业、牛业、羊业及马业国家唯一行业联盟，两大行业机构涵盖法国猪牛羊马养殖、屠宰、加工与销售全产业链，维护全行业共同利益，致力促进推广行业发展，拓展海外市场。
INAPORC&INTERBEV are two French inter-professional organisations in the pig, bovine, ovine and equine sectors. INAPORC&INTERBEV cover the entire chain from livestock, slaughter, processing to distribution in France. They represent the common interest of the sector and promote the development of the sector in France as well as in other countries.

Lesaffre Group

8.2C3-01

Address: 法国 France MARCQ EN BAROEUL-MARCQ EN BAROEUL-137, Rue Gabriel Peri- BP 3029
Tel: 61152788
Email: j.yu@lesaffre.com
Web: www.lesaffre.com

LESAFFRE Group is a key global player in Yeast and fermentation industry, founded in the Northern part of France in 1853. More than 160 years of experience and know-how in yeast manufacturing and fermentation, Biotechnology and life science field. Using yeast and other fermentation products, LESAFFRE develops, produces and delivers solutions that are tailored to the specific needs of our market.

Al Amal For Agricultural Crops

8.2C3-02(01)

Address: 埃及 Egypt Al Buheira-Al Buheira-Damanhur
Tel: 002 0453252525
Email: alamal@alamal.com
Web: www.alamal.com

Exporter of Pulses, Herbs & Dates Importer of Spices & Pulses.

Orient Group Food Industries S.A.E

8.2C3-02(02)

Address: 埃及 Egypt Mansheya-Alexandria-9 Oraby Square
Tel: 002034889820
Email: rania.elmaghraby@orienteg.com
Web: www.orienteg.com

Orient Group is a group of companies, established in 2003 as a manufacturing & trading company in Alexandria-Egypt. Our traditional business model is based on cultivation, manufacturing & outsourcing of: Dates, Herbs & Spices, Beans & Edible Seeds.
We are standing today as Egypt's leading exporter of dates for the past 10 years and of sesame seeds for the past 6 years.

Elmotawakel for import and export

8.2C3-02(03)

Address: 埃及 Egypt Cairo-5 mossad from tomanby elzaitoun
Tel: 24517335 / +20224517335
Email: aymanhelmy@hotmail.com
Web: www.facebook.com/elmotawakeldates

our company is a family company, starting business in 1977, we do business in nuts and seeds and dried fruits, now we own our own stores 6 branches and our dates processing factory. in year 2000 we build our dates processing factory, we start producing dates and distribute to our domestic market.

ELCAPTAIN COMPANY FOR EXTRACTING NATURAL OILS

8.2C3-02(04)

Address: 埃及 Egypt Cairo-Cairo-Obour City
Tel: +2010622202221
Email: TAREK.ABOZEID@YAHOO.COM
Web: www.elcaptain.net

EL CAPTAIN company for extracting natural oils, plantswhich is a well known & reputable name in Egypt , the Middle East, most of european countries and united states of America The company was founded in 1938 based on the principle of "Back To Nature".

GK Global Food Industries

8.2C3-02(05)

Address: 埃及 Egypt Cairo-Flr. 11, Second Entrance, El-Serag Mall, Makram Ebied, NAsr City
Tel: +201005478870
Email: mahmoud.bahei@esraapharma.com
Web:

Manufacturing Instant Pasta, Instant Rice, Instant Lintel, Mixed Cereals.

AL-SADAT

8.2C3-02(07)

Address: 埃及 Menofya-Sadat City-Bank's Central Mall, Zone 5, Sadat City-Menofya, Egypt Egypt Menofya-Sadat City-Bank's Central Mall, Zone 5
Tel: +201026252772
Email: haitham@sadat-agro.com
Web: www.sadat-agro.com

Sadat Agro, Is reputable for Oranges, Mandarins, Lemons, Grapes, Pomegranate, Onions, Potatoes and Strawberries.

Green Way for Investment and Agricultural Development

8.2C3-02(08)

Address: 埃及 Egypt Alexandria-Alexandria-31 Bahaa El-Din Elghatoury st. Smoha
Tel: 002 034241163
Email: wallaa@gwfruits.com
Web: www.greenwayeg.com

Green Way Company for Exporting Agricultural Products An Egyptian shareholding company established in 2007 Authorized Capital of 495 million Egyptian pounds and issued Capital of 49.5 million Egyptian pounds completely paid by partners and incorporators.

Greenland Group For Food Industries S.A.E

8.2C3-02(09)

Address: 埃及 Egypt Cairo-10th of Ramadan city -Area 106 , Industrial Zone B3
Tel: +20554500272
Email: mabdelwahab@greenland.com.eg
Web: www.greenland.com.eg

Greenland Group for Food Industries was founded in Egypt in 1995 It has been growing with huge confident steps in Egypt and The Arabian Region, gaining the trust of our consumers as we use the latest technologies in producing and innovating our products, taking into consideration environmental conditions. Greenland guarantees high standards of quality and hygiene.

LINAH FARMS / Linah for import and export

8.2C3-02(10)

Address: 埃及 Egypt Cairo-Giza-Eldokki
Tel: +20237497621
Email: h.bahnasawy@linahfarms.com
Web: www.linahfarms.com

Linah Farms specialize in producing, sorting and packing Medjool Dates Located in Egypt at Baharya Oasis.

Extra Global

8.2C3-02(11)

Address: 埃及 Egypt Alexandria-Omrat Osman, Building No 9, ElSaaa Victoria
Tel: +2035254230
Email: sales@extraeg.com
Web: www.extraeg.com

We are exporters and producers of fresh fruits and vegetables and our main products as follow:
- Citrus(Oranges, Mandarins, Lemons, Lime and Grapefruits)
- Fruits (Grapes, Pomegranates, Peaches, watermelon, strawberry & Mangoes)
- Vegetables (Potatoes, Yellow Onions (Golden), Red Onions, Spring Onions, Iceberg Lettuce, Capsicum, Green Beans, Fresh Garlic & Dry Garlic)

Future Agrico For Investment – Green 12 (S.A.E)

8.2C3-02(12)

Address: 埃及 Egypt Cairo-16 Gawad Hosny St, Qasr El Nil
Tel: +2 02 2391 7988
Email: M.razek@fa-gr12.com
Web: www.fai-gr12.com www.fa-gr12.com

"FAI-Green 12" is an Egyptian premium Fruits and vegetables grower and exporter.
FAI-Green 12 own 3 farms with total area over than 750 hectares and managing over than 1000 working members.
FAI-green 12 provides a wide range of products including oranges, mandarins, lemon, lime, strawberry, pomegranates, grapes and vegetables.

Fruit Link

8.2C3-02(13)

Address: 埃及 Egypt Cairo-EL Nozha-53 GESR AL SUEZ ST.
Tel: +20226231337
Email: info@fruitlinkco.com
Web: www.fruitlinkco.com

We are Fruit link, one of leading Egyptian companies in the field of exporting fresh fruits and vegetables from Egypt to worldwide. We have our own packing house, that grantees perfect product quality; starting from planting, harvesting, selecting, processing & loading.We are updated with the latest technologies about farms, the reason why our customers depend on us.

Raya Trade for Agriculture crops

8.2C3-02(14)

Address: 埃及 Egypt Qalyubia-shubra el kheima-El tatbekyen tower beginning of Cairo-Alexandria agricultural Road
Tel: 0020244063199
Email: info@rayacrops.com
Web: www.rayacrops.com

Raya trade for Agriculture crops Manufacturers and processing of export & import agricultural products for example White kidney dry beans, Seeds, Pulses, Herbs, Dried Lemon, Dates.

PARTNERS TRADERS FROSTY FOODS

8.2C3-02(15)

Address: 埃及 Egypt MOHRAM BEK BLOCK NO.3 INDUSTRIAL ZONE
Tel: 002034809694
Email: HEADOFFICE@FROSTY-FOODS.COM
Web: www.frosty-foods.com

Frosty- foods is a leading Egyptian company specialized in processing high quality Egyptian agricultural products such as IQF Vegetables and Fruits in addition to Vegetables in brine solution and canned foods.

EVERGREEN EGYPT UNITED

8.2C3-02(16)

Address: 埃及 Egypt Cairo-plot 9108, offrd.9 Mokattam, Cairo ,Egypt
Tel: +20228434134
Email: evergreen.tech.me@gmail.com
Web: evergreenegy.com

Ever Green Egypt United is one of the largest companies recently established. The company executes several large projects aiming at the advancement of the country. The most important projects implemented by the company are the fish farming project at Ghalion pond in Kafr El-Sheikh governorate, which is one Is one of the largest fish projects in Egypt, the Middle East and Africa.

samo (Abu Auf) / samo (Abu Auf)

8.2C3-02(17)

Address: 埃及 Egypt Cairo-New Cairo-Industrial zone .31-33 - third settelment
Tel: 00202 26053031
Email: export@abu-auf.com
Web:

Since 1976, Samo Trading Company started its career success to become an Egyptian market leader in the past 10 years for the importation and distribution of Dried fruits, nuts and Egyptian Dates.

Al Garas for spices and herbs

8.2C3-02(18)

Address: 埃及 Egypt EGYPT-ALEXANDRIA-73 AL HORYA ROAD
Tel: 00203939213
Email: logistics@algarasspices.com
Web: www.algarasspices.com

Al Garas for spices and herbs is an Egyptian trading company has been established in 1997, to be an extension of Al Garas trading company 1984, we provide the highest quality of Egyptian products such as spices, herbs, beans and seeds.
Today, we become one of the most important suppliers that exist in local market; we supply our products to Egyptian companies, wholesalers, retailers, packers.

Expressway LLP

8.2C3-03(02)

Address: 哈萨克斯坦 Kazakhstan Almaty-Burundaiskaya st. 93d
Tel: +7 (727) 246 86 84
Email: tooexpressway@gmail.com
Web: www.expressway.kz

The company was founded in 2014. Expressway LLP is specializing in exporting fish and fish products.

"Golden Camel Group LTD" LLP

8.2C3-03(03)

Address: 哈萨克斯坦 Kazakhstan Turkestan-Asylbekova st. 167
Tel: +7 (725) 337 19 99
Email: zhazz123@gmail.com
Web:

"Golden Camel Group Ltd" is the first factory that deep processing camel milk in Kazakhstan. The product of camel milk powder chooses high-quality camel milk uses advanced patented technologies in the world and world-class production line to preserve benefial ingredients in camel milk.

Meat Processing and Service

8.2C3-03(04)

Address: 哈萨克斯坦 Kazakhstan Almaty region -building 2, Boleksoz village, Kegan district
Tel: +77768787887
Email: tukanova_93@mail.ru
Web:

Meat Processing and Service was founded in 2008. Our company produces high-quality natural meat. The company is engaged in processing and cultivation of fodder crops, fattening of cattle, sloughter, deep processing of meat products and direct sale of meat products.

Rola-7 LLP

8.2C3-03(05)

Address: 哈萨克斯坦 Kazakhstan Zhambyl region-108 Myezakulov str., Krsnaya Zvezda village, Baizak district
Tel: +77263732266
Email: rola-7kz@mail.ru
Web:

"Rola-7" LLP is a large local producer of flour products, as noodles and pasta, in the Zhambyl region of the Republic of Kazakhstan and was found in 2008. In a short period of time, our company has established itself as a reliable partner and supplier of high quality products. Rola-7 also in short period of time managed to strengthen the position in Kazakhstan and CSI markets.

"Sun Bee Altai" LLP

8.2C3-03(06)

Address: 哈萨克斯坦 Kazakhstan 28/1-27 Ostrovskogo
Tel: +77272724366
Email: info@sunbee.kz
Web: www.sunbee.kz

LLP "Sun Bee Altai" was founded in 2012. The main direction of our activity is the production and realization of honey and bee keeping products. All apiaries are located in ecologically clean regions, far from industrial enterprises.

"Sun Planet Organic"

8.2C3-03(07)

Address: 哈萨克斯坦 Kazakhstan Almaty city-101/33 Al-Farabi ave.
Tel: +77272973488
Email: y.khakhulin@sunplanet.kz
Web: www.sunplanet.kz

Processing of fruits: organic dried fruits, direct pressed fruits & vegetable juices, wild apple juice.

LLP "Sweet ideas-KZ"

8.2C3-03(08)

Address: 哈萨克斯坦 Kazakhstan Shymkent-Tole Bi st. 41
Tel: +7 (725) 253 28 74
Email: sweet-ideas-kz@mail.ru
Web:

"SWEET ideas-KZ" LLP, founded on January 11, 2016, is the official representative of "MADLEN-KZ" LLP – a large confectionery factory existing in the market of Kazakhstan for more than 20 years. Today, he is also independently engaged in the production of chak-chak cookies, foamed bar and muffins, jam, gels and jams. The uniqueness of our company is the production of natural products.

"Terra Nova" LLP

8.2C3-03(09)

Address: 哈萨克斯坦 Kazakhstan 366 Almaty Region -Bereke village, Karasay district
Tel: +7(727)2320055
Email: apak@kazcomm.kz
Web:

"Terra Nova" LLP is one of the major companies in the soft drinks and drinking water production in Kazakhstan. It is well-known within and outside of Kazakhstan for its high quality level and advanced production technology.

Araltuz JSC

8.2C3-03(10)

Address: 哈萨克斯坦 Kazakhstan Almaty-Zhumaliyev street, 112
Tel: + 7(727)3410908
Email: evgeniy.korol@araltuz.kz
Web: www.araltuz.kz

In 1925 "Sol prospectors" team was established on the basis of Zhaksykysh saline takes this became the basis for establishment of present enterprise. In 1994 complex was privatized and deregulated JSC "Araltuz" was established. Currently "Araltuz" JSC is the largest salt producer in Kazakhstan.

"Rakhat" JSC

8.2C3-03(11)

Address: 哈萨克斯坦 Kazakhstan Almaty city-2a, Zenkov str.
Tel: +77272584711
Email: rafalovich@rakhat.kz
Web: www.rakhat.kz

Rakhat Joint-stock company is one of the main manufactures of confectionery products in Kazakhstan.

JSC Bayan Sulu

8.2C3-03(12)

Address: 哈萨克斯坦 Kazakhstan Kostanay-Borodin st. 198
Tel: +7 (7142) 56 63 73
Email: market@bayansulu.kz
Web: www.bayansulu.kz

Today, Bayan Sulu JSC is one of the largest confectionary producers in Kazakhstan. The factory produces and realizes two groups of confectionery products: sugary products(caramel, toffee, dragee, sweets, chocolate, marmalade, marsh-mallow), and floury products(biscuit, wafers). Production capacity of the enterprise allows to produce over 80000 tons of confectionary products per year.

"VOSTOKSELKHOZPRODUKT" LLP

8.2C3-03(13)

Address: 哈萨克斯坦 Kazakhstan Ust-Kamenogorsk city-51 Toktarova str.
Tel: +77232613474
Email: sales.department@vsp.kz
Web:

The sunflower oil refined deodorized frozen the premium: TM "Altyn may", TM "Solnechnoe", TM "NUR". Production of sunflower oil and feed.

VostokEcoLine LLP

8.2C3-03(14)

Address: 哈萨克斯坦 Kazakhstan Oskemen-Putevaya st. 15
Tel: +7 (7232) 23 00 54
Email: vostokecoline@mail.ru
Web: www.vostokecoline.kz

VostokEcoLine LLP was established in October 2016 at the production facility of the Farm Mousehold "Borisov B.V." operating since 1998. The Company continued to produce high-quality natural food stuffs-extravirgin sunflower oil and buckwheat. Vast work experience of the employees allows us to produce food-stuffs meeting all the applicable standarts.

Eurasian Foods Corporation JSC

8.2C3-03(15)

Address: 哈萨克斯坦 Kazakhstan Almaty city-69 Bayzakova
Tel: +77273787148
Email: talgat.yegizek@efc.kz
Web: www.efc.kz

Production of oil fat products

"Pchela" LLP

8.2C3-03(16)

Address: 哈萨克斯坦 Kazakhstan Almaty region-30, Seifullin str., Shalkar village
Tel: +77017570299
Email: dk_service@bk.ru
Web:

LLP "Pchela" is one of the leaders in Kazakhstan market of honey production over a period of 20 years. More than 20 sorts of honey can be suppplied in bulk and packed in different jars.

Prombaza-7 LLP

8.2C3-03(17)

Address: 哈萨克斯坦 Kazakhstan Kostanay region-Pobeda street, 1B, Fyodorovka village, Fyodorov district
Tel: +77142212246
Email: prombaza7@mail.ru
Web:

agriculture, sunflower factory, linen factory

Katon-Karagay deer park

8.2C3-03(18)

Address: 哈萨克斯坦 Kazakhstan Ust-Kamenogorsk city-91, Kabanbay batyr str.
Tel: +77232240413
Email: tok.b@mail.ru
Web:

Katon-Karagay deer park was established in 1996 as a deer breeding farm. Katon-Karagay deer breeding farms association is a group of companies working in the invigorating area of deer farming other aspects include a production of biologically active food supplements production, export of deer antles and unique network of wellness sanatoriums of Kazakhstan. Breeding of masals and deer.

"Kublei"LLP

8.2C3-03(19)

Address: 哈萨克斯坦 Kazakhstan Uralsk city -13/3 Polevaya str.
Tel: +7727112211505
Email: z.berekesheva@kublei.kz
Web: www.kublei.kz

Food and agricultural products. Fish and meat cans, frozen meat.

"Lepsinsk onimi" LLP

8.2C3-03(20)

Address: 哈萨克斯坦 Kazakhstan Almaty city-5A, Ualikhanova str., Lepsi v., Alakol district
Tel: +77019082244
Email: lepsihoney@gmail.com
Web:

Lepsinsk Onimi LLP was founded in March 2016. The company is engaged in the production, packaging and wholesale-retail sale of the product under the brand "Lepsinsky natural honey". It is an environmentally friendly product with a unique taste and rich aroma. Variety-mountain grass.

Pioneer Grain Products LLP

8.2C3-03(21)

Address: 哈萨克斯坦 Kazakhstan Shymkent-Sadikulova st, 75
Tel:
Email: gs.astana@mail.ru
Web:

Production and sale of agricultural products. Production and processing of soft wheat and pastry.

Production Cooperative SPK MYOD KZ

8.2C3-03(22)

Address: 哈萨克斯坦 Kazakhstan 47 Sadyr Paluan str., Chundzha village, Chunzha riral district, Uygur district
Tel: +77272740225
Email: apicenter2000@mail.ru
Web:

The company was founded in 2016. Today, the company unites 25 apiaries. In 2018, the company unites 25 apiaries. In 2018, the company produced over 150 tones of high-quality honey.

Asia Waters LLP

8.2C3-03(23)

Address: 哈萨克斯坦 Kazakhstan Almaty city-223 Nazarbayev ave., building 5
Tel: +77273311331
Email: nygman.saduov@qazspirits.com
Web:

Asia Waters LLP was founded in 2016. Our association comprises of JSC Kokshetau Mineral Water, PVZ BN LLP, Wympel Group LLP, Geom LLP, which are engaged in the production, packaging, wholesale, retail sale of the products(natural mineral water, alcohol). The aim of association is the promotion on the international markets products of Kazakhstani manufacturers as vodka factories and mineral water.

Eurasia Invest Ltd.

8.2C3-03(24)

Address: 哈萨克斯坦 Kazakhstan Nur-Sultan city-office 22, 6/1 Kabanbay batyr ave.
Tel: +77172925100
Email: m_rakhimberdiyeva@saumal.kz
Web: www.saumal.kz

The world's largest mare milk drying plant was built in 2014 in the middle of Kazakhstan steppes. European technology implemented under the strict supervision of German experts helps to fully comply with environmental and health standards.

Sultan-Marketing LLP

8.2C3-03(25)

Address: 哈萨克斯坦 Kazakhstan Almaty-Iliyskiy trakt st. 31a
Tel: +7 (727) 290 23 43
Email: export@sultanmarketing.kz
Web: www.sultanmarketing.kz

Industrial complex of flour, macaroni and semolina production "Sultan Marketing" was established on the area of 100 000 m2 and placed in operation in February of 1996 in Petropavlovsk city, North Kazakhstan region. The present time 323 people are employed in the factory. 100 tons of wheat can be stored in the elevator at the same time.

Zeytun KZ LLP

8.2C3-03(26)

Address: 哈萨克斯坦 Kazakhstan Karaganda city-31, Shahterov ave.
Tel: +77212327709
Email: seda-kz@mail.ru
Web:

Zeytun KZ LLP was founded in 2017. The main activity of the company is production of flour of the first, second and highest grade. Production capacity – 2000 tons per month. We use modern Turkish-origin equipment for production of the flour and our production corresponds to all quality standards. The sale of flour is carried out both for inner Kazakhstan market and for export.

"DEP" LLP

8.2C3-03(27)

Address: 哈萨克斯坦 Kazakhstan Kostanay city-32/1 Lermontov str.
Tel: +7(7142)560071
Email: marketing@dep.kz
Web: www.dep.kz

The company began its production activities on October 14, 1997 in Kostanay. Today, the company has three production sites in the cities if Kostanay, Lisakovsk and Pavlodar. DEP produces more than 100 organic products: milk, condensed milk, milkshakes, dairy products, cheeses, sour cream, cottage cheese products, yogurts, butter and ice cream.

Inter Trade

8.2C3-03(28)

Address: 哈萨克斯坦 Kazakhstan Akmola region-No 2, Atbasar city
Tel: +77777777410
Email: atbasar_intertrade@yahoo.com
Web:

First and highest grade wheat flour production. Environmentally friendly product, without chemical additives. Inter Trade LLP owns fields with a total area of 47.264 hectares, which means that the supply of flour will be regular. Our flour is recognized as a leader in its industry. Flour is distributed in packaging of 2 kg, 5 kg, 10 kg, 25 kg, 50 kg.

Shin-Line LLP

8.2C3-03(29)

Address: 哈萨克斯坦 Kazakhstan Almaty-Sultan Beibaris st. 24
Tel: +7 (727) 290 38 00
Email: kdotsenko@shin-line.com
Web: www.shin-line.com

Shin-Line is the largest ice cream manufacturer in Kazakhstan offering a number of all time favorite ice cream brands.

"JFM Company" LLP

8.2C3-03(30)

Address: 哈萨克斯坦 Kazakhstan Shymkent city-89/3 Sairamskaya str.
Tel: +77017156822
Email: improd@inbox.ru
Web:

JFM Company was foun in 2005. One of the successful, dynamically developing company. The average number of employees are 200 people. Our company makes and realizes fish preservation of own production under various trademarks.

RG Brands

8.2C3-03(31)

Address: 哈萨克斯坦 Kazakhstan Almaty-Raimbeka 212 B
Tel: +77273115555
Email: ivanpirogov@yandex.kz
Web:

t is a leading company in the field of food and beverage in Kazakhstan. Founded in 1994, RG Brands Company today has 4 production sites in the North and South of Kazakhstan with total capacity of 750 million liters a year.
RG Brands produces a range of strong brands and takes leading market positions in all business segments. Availability of its own nationwide platform for sales and distribution.

Aotearoa Nutrients Limited

8.2C4-01(01)

Address: 新西兰 New Zealand Auckland-Auckland-Level 1, 31-35 Carbine Road, Mt Wellington
Tel: +64 09 6018281
Email: Roc.Zhao@bluebellbabies.co.nz
Web: www.aotearoanutrients.co.nz

Aotearoa Nutrients is a New Zealand nutraceutical company passionate about helping families enjoy great health every day. We provide quality nutrition for every age and stage from new babies to busy adults and active retirees. Our products make it easy to bring good health into your everyday life.

ICING INTERNATIONAL LIMITED

8.2C4-01(02)

Address: 新西兰 New Zealand Bay of Plenty-Rotorua-1151 Pukuatua Street
Tel: 006473491694
Email: nina.li@icing.com.cn
Web: www.richorahoney.co.nz

新西兰RICHORA瑞琪奥兰麦卢卡蜂蜜精选100%新西兰天然无污染，无任何添加，零抗生素的纯净高品质麦卢卡蜜源，采用先进五道过滤生产设备，确保您享用到的每一瓶麦卢卡蜂蜜细腻醇厚，无杂质无结晶，达到新西兰最高品质，每一瓶蜂蜜都有属于它的批次UMF报告和MPI五项属性等检测证书并可追根朔源；瑞琪奥兰仍在致力于研发更多和麦卢卡蜂蜜相关的口腔/护肤品等更多健康天然产品，带给世界消费者更纯净的新西兰风。
Richora is a premium Manuka honey brand from New Zealand; the products include Manuka honey and related skincare and oral care products etc. It carries NZ Fernmark ,NZ Made and UMF® trademark, proving the product is genuine Manuka honey as well as its traceability.

艾瑞塔营养有限公司 / Amrita Nutrition Limited

8.2C4-01(03)

Address: 新西兰 New Zealand Auckland-Wiri-59 Druces Road
Tel: +64 92620 945
Email: michael.heng@amritanutrition.co.nz
Web: www.amritanutrition.co.nz

艾瑞塔营养有限公司坐落于新西兰北岛的千帆之城“奥克兰”。本公司专业从事于多个品牌的纯天然高端营养食品的研发，生产以及销售等领域。本公司不仅拥有专业的生产技术团队，同时还拥有高精尖的生产设备来保障公司产品的质量。我们的每一个产品都是严格按照新西兰初级产业部的要求执行生产，并且符合新西兰食品安全标准。
Amrita Nutrition Limited is a MPI and china CNCA registered dairy powder products manufacturer located in Auckland, New Zealand. We are running multiple state-of-art production lines specializing in dairy powder formulation, blending, canning, pouch and sachet packing. Our purpose built facility has been structured and implemented to comply with New Zealand food and Safety Standards.

AFC Group Holdings Limited

8.2C4-01(04)

Address: 新西兰 New Zealand Auckland-Auckland-1/245 Ti Rakau Drive, Burswood
Tel: 006499300245
Email: howard.long@afcnz.com
Web: www.afcnz.com

AFC GROUP HOLDINGS LIMITED (AFC) is a listed company on the New Zealand Stock Exchange (NZX), stock code: AFC. The company is headquartered in Auckland. It is a diversified group specialising in food research and development, manufacturing, marketing and cross-border trade.

Keytone Dairy Corporation Limited

8.2C4-01(05)

Address: 新西兰 New Zealand Christchurch-7 Paragon Place
Tel: +64 3 961 8088
Email: shannon.harrison@keytonedairy.com
Web: www.keytonedairy.com

Publicly listed company ASX Limited as at July 18, 2018. Primarily source the finest NZ ingredients, enabling us to manufacture and sell high quality dairy and dairy nutrition products under our own brands as well as contract manufacturing and packing for well-known brands. RMP, CNCA, BRC, Halal, FCCA, SCS & WW.

Picot Productions LTD

8.2C4-01(06)

Address: 新西兰 New Zealand Nelson-Stoke-15-18 Elms Street
Tel: 15889916022
Email: godeverest@126.com
Web: www.picspeanutbutter.com

2005，55岁半失明的PICOT吃了一罐令人失望的花生酱，从而激发创业梦想。非转基因纯高油酸花生，烘烤研磨15分钟内装罐。荣获号称美食“奥斯卡”的Great Taste 世界美食大奖，澳新五星健康评级，新西兰销售冠军。
Pic's Peanut butter, New Zealand lagendary peanut butter, awarded the Great Taste World Food Award, which known as the Oscar of food, the Australia and New Zealand Five Star Healthstar Rating.

Maui sheep milk

8.2C4-01(07)

Address: 新西兰 New Zealand Taupo-Waihaha-Te PuTu Road
Tel: +64 276703448
Email: nataliedang@mauifood.com.cn
Web: www.mauimilk.co.nz

牧怡绵羊奶乳业致力于在新西兰发展绵羊奶产业，自有牧场坐落在北岛陶波湖畔，自有南十字星羊种，科学的自由放牧，从牧场到餐桌完善的全产业链质量追溯，确保了绵羊奶产业的发展的规模化以及高品质的质量。
Maui supplies premium, 100% New Zealand pure sheep milk products from our sheep farm based in Taupo Central North Island. Grass-fed dairy sheep have been bred for generations for optimal health and production. The high quality sheep milk dairy products we produce are the result of New Zealand's world leading farming systems.

NEW ZEALAND DAIRY DEVELOPMENT LTD

8.2C4-01(08)

Address: 新西兰 New Zealand AUCKLAND-AUCKLAND-LEVEL1,100 MAYORAL DRIVE
Tel: 098892853
Email: SONG@GOLDENFERN.NET
Web: www.goldenfern.net

Dairy products supplier.

新智恩 / Nurturant Nutrition Ltd

8.2C4-01(09)

Address: 新西兰 New Zealand Auckland-44B Crooks Road, East Tamaki
Tel: 094797987
Email: shuyi.wang@oneonehealth.co.nz
Web: nurturant.co.nz

Nurturant represents products that born in pure New Zealand with care and love for our children. Nurturant has a wide range of products manufactured in our state of the art production facilities in Auckland. With more than 30 years of dedicated expertise of nutrition formulation, research and development, we nurture our future with care and love from the beautiful country of New Zealand.

噢尼噢尼健康集团 / OneOne Health Group Ltd

8.2C4-01(10)

Address: 新西兰 New Zealand Auckland-39 Westpoint Drive, Hobsonville
Tel: 4008520909 / +64 94797987
Email: ashily.meng@oneonehealth.co.nz
shuyi.wang@oneonehealth.co.nz
Web: www.oneonehealth.com.cn
oneonehealth.co.nz

OneOne® represents a choice of premium health-oriented products, capturing the best that pure New Zealand has to offer. As a Silver Member of New Zealand Food HQ, which brings together more than 2200 scientists from eight internationally recognised research and innovation organisations in New Zealand, OneOne aims to provide the best quality healthy foods for our consumers all over the world.

纽食篮 / New Zealand Food Basket Limited

8.2C4-01(11)

Address: 新西兰 New Zealand 1010-Auckland-Achilles House, Suite 202, Level 2, 8 Commerce Street
Tel: 0064278888880
Email: daniel@nzfoodbasket.com
Web: www.nzfoodbasket.com

纽食篮在新西兰政府的支持下汇集了新西兰广受欢迎的食品和饮料，为您带来美妙而丰富的新西兰味蕾之旅。
我们致力于将高端的新西兰食品及饮料介绍给中国消费者，并成为他们最喜爱的在线零售终端。
New Zealand Food Basket, with support of the New Zealand Government, has gathered some of New Zealand's favourite food & beverages to provide you with a complete New Zealand taste experience.
Our objective is to become the preferred online retail destination for discerning Chinese consumers of premium New Zealand food and beverage products.

Crown Range Cellar Limited

8.2C4-01(12)

Address: 新西兰 New Zealand Auckland-Parnell-251, Parnell Road
Tel: +6421985586
Email: John@crownrangecellar.com
Web: www.crownrangecellar.com

Crown Range Cellar (CRC) produces a range of international boutique wines. CRC originally produced limited single vineyard Pinot Noir only in Gibston Valley in Central Otago, New Zealand. In 2015, CRC wines were named the best Pinot Noir in the world at the London IWSC. The CRC Group currently has seven brands of wines in New Zealand and France.

APACE INTERNATIONAL TRADING LIMITED

8.2C4-01(13)

Address: 新西兰 New Zealand AUCKLAND-3H HENRY ROSE PL
Tel: 0064093797978
Email: info@apace.co.nz
Web: apace.co.nz

APACE 国际贸易公司于2009年成立于新西兰最大城市奥克兰,是专业从事进出口贸易的本地企业,经营范围包括红酒,果汁,果泥,牛羊肉,奶制品,各类食品,以及建筑板材等等。近十年的经营中,专注于中新两国的双边贸易,积累了丰富的国际贸易经验,培养出一批精通国际贸易,熟练运作各类项目的专业人才。同时,APACE旗下拥有位于新西兰本地专注于生产高端果汁的果汁工厂。
APACE was established in 2009. Our business includes juice, fruit puree, wine, building materials, food and etc. In ten years business operation, we focus on international trading between New Zealand and China. Our professional staff and experience are looking forward to future cooperation.

新西兰生命阳光营养品集团有限公司 / Sunlife Nutritionals Enterprise Corporation of New Zealand Ltd.

8.2C4-01(14)

Address: 新西兰 New Zealand Auckland-Penrose-110 Hugo Johnston Drive
Tel: 021 851528
Email: shania.qiu@sunlife.co.nz
Web: www.sunlife.com.cn

新西兰生命阳光集团成立于1999年,由新西兰舒利华营养品公司提供合作支持。经过20年发展建立天然营养联盟,包含免疫营养、骨骼营养和肠道营养系列,所有系列产品精心挑选新西兰供应商的优质原料,为各个人群提供营养呵护。
New Zealand Sunlife Group was founded in 1999, has obtained the support from New Zealand Seperex Nutrition Ltd.. With 20 years of development, we have built a natural nutrition league including immune nutrition, bone nutrition and intestinal nutrition series, and all series products benefit different groups of people.

The Escarpment Vineyard Martnborough Ltd.

8.2C4-01(15)

Address: 新西兰 New Zealand Martinborough-275 Te Muna Road, P O Box 15
Tel: 086-021-38911081
Email: mei@escarpment.cn
Web:

爱斯卡门成立于1998年,以酿造黑皮诺葡萄酒著称,旗下有三个系列共15款酒,其系列 酒款屡获殊荣:曾被全球覆盖面最广的葡萄酒专业杂志《醇鉴》(Decanter)冠以2010年9月新西兰最佳20款葡萄酒之首,并荣登封面;2017年度又再 次喜获《醇鉴》金奖。
亦喜获全球影响力最大的专业杂志《葡萄酒观 察家》(Wine Spectator)2015 年度全球百大葡萄酒评选第七名,成为首个进入前十榜单的 新西兰葡萄酒。
Escarpment Vineyard was established in 1999 with the vision of making "tomorrow's definitive New World wine styles". Situated to the east of Martinborough in Wairarapa region.
The founder and chief wine-maker Larry McKenna, honored NZ Wine Hall of Fame 2014 and inducted as a Fellow of NZ Winegrowers in 2016.

新西兰丰盛湾集团公司 / Bay of Plenty Group Limited

8.2C4-01(16)

Address: 新西兰 New Zealand Auckland-Silverdale-Unit 4 152 Foundry Road
Tel: +64 22 329 8698
Email: Jennifer@bayofplentygroup.com
Web: www.plentybay.co.nz

丰盛湾集团成立于2015年 是一家以生产开发高端海鲜食材为主的公司。
坐落于新西兰的经济贸易中心,奥克兰。
我们的经营板块包括生产与加工,零售业务以及国际贸易。
新西兰得天独厚的自然环境, 新鲜多样的食材为我们提供了丰富的原材料。
Bay of plenty Group established in 2015, we are a company produces and develop seafood product.
We are located in the trading and economic center of New Zealand, Auckland Our business area include Food Processing, Food retail and International Trade.
The nature of New Zealand create various variety of raw material.

NEW FUTURE INTERNATIONAL CO.,LTD

8.2C4-01(17)

Address: 新西兰 New Zealand Auckland-71 Plunket Avenue, Manukau
Tel: 0754 88705020
Email: czq@lifestreamnz.com
Web: www.newfuture.co.nz

New Future International Co., Ltd was founded in 2001, headquartered in Auckland. For 18 years, basing on idea of naturopathy and pure natural resources of New Zealand, New Future has developed a few series of natural healthy food and healthcare products. Our brand "Joy Living" have launched Manuka Honey Lollipops, Just Fruit Bites, Blackstrap Molasses, Kids nutritional drink series, and so on.

The Tatua Co-operative Dairy Company

8.2C4-01(18)

Address: 新西兰 New Zealand Tatuanui-3434 State Highway 26
Tel: 15001851542
Email: andrew.mcconchie@tatuashanghai.com
Web: www.tatua.com

What we do:
Manufacture safe dairy ingredients and dairy foods
Collaborate with customers to generate greater value
Respond to changing customer needs
Provide reliable delivery to our customers
Focus on innovation and product development capabilities
Continuously develop our people to provide higher levels of customer service

Cloud Ocean Water Ltd

8.2C4-01(20)

Address: 新西兰 New Zealand Christchurch-20 Station Road
Tel: 0064210343890
Email: linghaigroup@gmail.com
Web: www.cloudoceanestate.com

新西兰大型瓶装水生产厂家,生产各种规格的瓶装水,出口全球。
Cloud Ocean Water Ltd is the largest water bottling company in New Zealand. manufacture packaging water, honey and wine, source and export milk products, export to different oversea counties.

Kiaora Investment Group Limited

8.2C4-01(21)

Address: 新西兰 New Zealand Auckland-Rosedale-B5, 396 Rosedale Road
Tel: 400-600-1066
Email: sales02@fernbaby.co.nz
Web: www.fernbaby.co.nz

Fernbaby New Zealand总部坐落于新西兰最大的城市奥克兰,是本土高端的婴幼儿奶粉品牌,在当地各大超市有售,也是奶粉主流品牌之一。100%新西兰制造,秉承自然成长,未来无限的理念,多年来深受新西兰妈妈的喜爱。从2012年开始出口海外,目前在中国也有成熟的销售网络。
Headquartered in New Zealand's largest city-Auckland, Fernbaby is a local high-end brand and one of the leading brands of infant formula. With its natural growth and unlimited future, Fernbaby has been loved by New Zealand mothers for many years.

Sweet As Popcorn比尔叔叔爆米花

8.2C4-01(22)

Address: 新西兰 New Zealand Waikato-Hamilton-187 Ellis St
Tel: +64 7853 7058
Email: clara@sweetaspopcorn.co.nz
Web: www.sweetaspopcorn.co.nz

无麸质、无乳糖、非转基因、无添加人工色素香精,100%新西兰制造天然爆米花。
Gluten Free/ Dairy Free / Non-GMO / No added artificial flavours or colour 100% made in New Zealand popcorn company.

T&G Global / T&G GLOBAL

8.2C4-01(23)

Address: 新西兰 New Zealand Auckland-2 Monahan Road, Mt Wellington,
Tel: 021-34786082
Email: paul.song@tandg.global
Web: www.tandg.global

T&G Global 的故事始于1897年。
我们是新西兰最大的集生产,包装,运输和市场营销为一体的公司之一。我们建立的团队,架构,品牌能进一步支持我们的合作伙伴全球运营和给予股东们回馈。
从一粒小小的种子到销售,T&G 也在不断的投资新的品种,技术和创新,同时也在维护已有的品牌,满足客户未来的需求。
我们期待与你一起丰富你的世界。
T&G Global (originally Turners and Growers) was born in New Zealand over 120 years ago Today, we're a truly global business that produces some of the world's safest fresh fruit and vegetables. Like you, we love our food.
We're constantly exploring ways to make it more sustainable, fresh and delicious.

Manuka Health New Zealand Limited

8.2C4-01(24)

Address: 新西兰 New Zealand Auckland-Newmarket-123 Carlton Gore Road
Tel: 6495701820
Email: linl@manukahealth.co.nz
Web: www.manukahealth.co.nz/en-nz

Manuka Health was founded in 2006, our products are available in more than 45 countries and we are number 1 brand in more than 25 countries. We pioneered the MGO™ rating system to test and certify every jar for MGO potency, purity and quality. Our MGO Manuka honey range from MGO 30+ to MGO 1000+, from Gourmet to Ultra Care.

Paritua vineyard and winery

8.2C4-01(25)

Address: 新西兰 New Zealand Napier-Hasting-2112 Maraekakaho RD, Flaxmere, Raukawa
Tel: +64 (0)6 874-9180
Email: jasonyu@paritua.com
460077747@qq.com
Web: parituavineyardandwinery www.paritua.com

Our vineyards and winery in the heart of New Zealand's acclaimed wine-growing region, Hawkes Bay, The name Paritua is a tribute to the Paritua Stream, which meanders gently through the vineyard. Paritua means the meandering stream above the ancient river. The vineyard is planted over the historical riverbed of the nearby Ngaruroro River which flowed through pre the 1860s earthquake.

One Pure International Group Ltd.

8.2C4-01(26)

Address: 新西兰 New Zealand Auckland-Auckland CBD-Level 14/191 Queen Street, Crombie Lockwood Tower,
Tel: 8610-56468081
Email: lisa@onepure.cn
Web: www.onepure.com.cn
www.onepure.co.nz

OnePure Water has a mission: to seek out New Zealand's purest artesian water and bottle it direct at the source. To share the health benefits of natural artesian water with everyone. To supply New Zealand's finest, untouched artesian water to the world. This is the only OnePure.

Winston Nutritional Ltd

8.2C4-01(27)

Address: 新西兰 New Zealand Auckland-Auckland-37 Banks Road, Mt Wellington
Tel: +6495708688
Email: dave.nicholas@winstonnutritional.co.nz
Web: www.winstonnutritional.co.nz

Established in 2015, Winston Nutritional is an innovative and modern manufacturer of pure New Zealand dairy powder nutritional products. It has one very simple philosophy – to use the finest quality ingredients, processes and technology to create the best nutritional products on the market for our clients.

麦肯琪集团新西兰有限公司 / McKenzie Group NZ Ltd

8.2C4-01(28)

Address: 新西兰 奥克兰-阿尔伯尼-2B/1威廉姆皮克林大道,罗斯德尔 New Zealand Auckland-Rosedale-2b/1 William Pickering Drive
Tel: 0064 9 447 1088
Email: wayne@mckenziegroup.co.nz
Web: www.mckenziegroup.co.nz

麦肯琪集团新西兰有限公司成立于2011年, 为新西兰优质产品的主要出口商。拥有优秀的产品交付系统,纯净、清洁、自然,追求产品的完整与保真,致力于“把新西兰推向世界”。
Along with worldwide distribution capacity, we have excellent product delivery systems supported by traceability and security programs. Integrity, reliability and authenticity are key. With these values and New Zealand's natural advantages, McKenzie is Taking New Zealand to the World.

Vitaco Health (NZ)Limited

8.2C4-01(29)

Address: 新西兰 New Zealand Auckland-Auckland- Corner Kordel Place &Accent Drive East Tamaki
Tel: 13567679896
Email: 13567679896@163.com
Web: www.vitaconz.cn

Vitaco Health Ltd began as a company in 2007 as a merger of two Australasian health & wellness companies:
Nutra-Life Health & Fitness: a leading supplement and sports nutrition manufacturer.
Healtheries of New Zealand: one of New Zealand's most trusted brands and largest and oldest health food and supplement manufacturers.
We have built a reputation for world-class manufacturing and knowledge.

PT Fortune Nestindo Sukses

8.2C4-02(02)

Address: 印度尼西亚 Indonesia Jakarta-Jakarta Utara-Jalan Kapuk Raya No.19A
Tel: 02129725722
Email: ptfortunenestindosukses@yahoo.com
Web:

印尼财富燕窝有限公司(PT.Fortune Nestindo Sukses)创立于印度尼西亚,是印度尼西亚正规燕窝工厂之一,创立人更是已经有二十多年的经验。我们提供最好品质的燕窝给所有尊敬的客户。
PT. Fortune Nestindo Sukses was founded in Indonesia. We are one of the official bird's nest factories in Indonesia. The founder has more than 20 years of experience. We provide the best quality of bird's nest for all of customer

PT. VICTORIA CARE INDONESIA

8.2C4-02(03)

Address: 印度尼西亚 Indonesia JAKARTA-JAKARTA-WISMA SSK 5TH FLOOR, POST CODE 11710
Tel: +62-21-54368111
Email: MTA@VCI.CO.ID
Web: www.vci.co.id

Established in 2007 PT. Victoria Care Indonesia specializes in manufacture of Balinese and Indonesian traditional personal care and cosmetic products. The company is currently expanding its core business from consumer products to agriculture (coffee beans) and tourism in the Island of Bali.

PERMATA HIJAU GROUP (PHG) / 绿宝集团

8.2C4-02(04)

Address: 印度尼西亚 Sumatera Utara-Medan-Iskandar Muda No.107 Indonesia Sumatera Utara-Medan-Jalan Iskandar Muda No.107
Tel: +62614577777
Email: marketing@permatagroup.com
Web: www.permatagroup.com

PERMATA HIJAU GROUP, a fully integrated oil-palm corporation, was established in 1984 in Medan, Sumatera, Indonesia, with core business in the palm oil plantation from upstream to downstream. We are selling palm oil, oleochemicals, cooking oil and shortening. As of now, we have exported our products around the world.

PT Irawan Djaja Agung

8.2C4-02(05)

Address: 印度尼西亚 Indonesia East Java-Sidoarjo-Jl Raya Sukodono, Sukodono
Tel: +6231 7882381
Email: setya.i@ida.co.id
Web: www.ida.co.id

PT. Irawan Djaja Agung have manufactured products using 4 brands. Those brand are Cap 19, Cap BETET, Cap Burung dan Dua Bidadari and Cap IDA. Those products are categorized as medicine, cosmetics and traditional medicines. Our main export products are Telon Oil Babylon (Cap BETET/Parrot Brand), Rub Balm (Cap BETET/Parrot Brand), and Medicated Oil (Cap BETET/Parrot Brand).

PT Garudafood Putra Putri Jaya Tbk

8.2C4-02(06)

Address: 印度尼西亚 Indonesia DKI Jakarta-Jakarta-Jl Bintaro Raya No 10A Kebayoran Lama Jakarta Selatan
Tel: +6281808170822
Email: daniel@garudafood.com
Web: www.garudafood.com

Garudafood was formally established in 1994 to market all peanut products under the leading brand name – Kacang Garuda. Garudafood has since blossomed into a leading packaged food producer, which currently producing and selling 5 (five) brands of food and beverages, namely Gery, Garuda, Chocolatos, Leo and Clevo. These brands represent biscuits, peanuts, crackers, confectionery, dairy and snacks.

PT Marimas Putra Kencana

8.2C4-02(07)

Address: 印度尼西亚 Indonesia Central Java-Semarang-Jln. Candi I Blok D21-D22 Kawasan Industri Candi Gatot Subroto
Tel: (024) 7614027
Email: dianhalim@marifood.co.id
Web: www.marifood.co.id

Marifood Group is a company that excels in the manufacturing and distribution of snacks and powder drink products in Indonesia. Marifood Group's main product is Marimas fruit juice powder drink, the top product in Indonesia.

GAEKI - ICEA (INDONESIA COFFEE EXPORTERS ASSOCIATION)

8.2C4-02(08)

Address: 印度尼西亚 Indonesia JAWA TIMUR-SURABAYA-JL. PANGLIMA SUDIRMAN NO. 74 / I
Tel: +62315343223
Email: hutama_sugandhi@anekacoffee.com
Web: www.gaeki.or.id

Indonesia Coffee Exporters Association is the goverment approved Indonesia coffee association, wich declaration on september 15, 2011 and backed-up by a good number of well-managed Coffee Exporters.
Intent and purpose of the society is the field of socio-cultural and humanitarian cooperation in the coffee business is taft, professional and highly competitive.

PT.Anugerah Citra Walet Indonesia 027-燕太太 Group / PT.Anugerah Citra Walet Indonesia 027-YanTyTy Group

8.2C4-02(09)

Address: 印度尼西亚 Indonesia Kap Bogor-Parung-Jalan Gunung Sindur, Curug
Tel: 4008-335-066
Email: Rdyf74@gmail.com
Web: www.yantaitai.com

YanTyTy Group business is concentrated on Birdnest Industry. We build vertical inter grated business platform from selfbuilt Birdnest house at Kalimantan and Birdnest factory that produced high quality premium Birdnest at Bogor to be exported to our own Import Export company in Shanghai. We also have ready to eat birdnest factory which can produce 100,000 bottles/day.

PT INDOFOOD CBP SUKSES MAKMUR TBK

8.2C4-02(10)

Address: 印度尼西亚 Indonesia Jakarta-Jakarta-Sudirman Plaza, Indofood Tower 23rd Floor, Jl Jend Sudirman Kav 76-78, 12910
Tel: 6221-57958822
Email: andre.sheridan@icbp.indofood.co.id
Web: www.indofoodcbp.com

PT Indofood CBP Sukses Makmur Tbk is a leading Food FMCG manufacturer in Indonesia. Our products ranging from instant noodles, edible oil & fats, food seasonings, snacks, baby food.

PT. SINAR SOSRO

8.2C4-02(11)

Address: 印度尼西亚 Indonesia WEST JAVA-BEKASI-JL. RAYA SULTAN AGUNG KM.28
Tel: 021-8840855
Email: sylvia.kurnia@sosro.com
Web: www.sinarsosro.id

PT. Sinar Sosro is the first ready-to-drink bottled tea company in Indonesia and was officially registered on 17 July 1974.
Tehbotol Sosro only uses original and natural raw materials. The tea leaves are picked from the plantation itself.
Now, products manufactured by PT. Sinar Sosro is, Tehbotol Sosro, Sosro Fruit Tea, S-Tee, Tebs, Country Choice and Prim-A Mineral Water.

The Palm Oil Plantation Fund Management Agency (BPDPKS)

8.2C4-02(12)

Address: 印度尼西亚 Indonesia DKI Jakarta-Jakarta Pusat-Graha Mandiri Lt.5, Jl. Imam Bonjol No.61 Menteng
Tel: +622139832091
Email: achmad.sutawijaya@bpdp.or.id
Web: www.bpdp.or.id

The Palm Oil Plantation Fund Management Agency (BPDPKS) is in charge to manage the Palm Oil Plantation Funds by collecting, developing, and disburstment, based on applicable laws and regulations

PT UNIVERSAL INDOFOOD PRODUCT

8.2C4-02(13)

Address: 印度尼西亚 Indonesia INDONESIA-MEDAN-KL YOS SUDARSO KM 7.3
Tel: +6261 6619882
Email: jessica@unibis.co
Web: www.unibis.co.id

Initiating with its fundamental business principles in terms of value, price and quality, and through the hard work of competent individuals since its inception in 1972, PT Universal Indofood Product has been running its business operation amidst the global market. Selecting the finest natural ingredients, and implementing modern technologies are the major keys to its quality production.

PT Kobe Boga Utama

8.2C4-02(14)

Address: 印度尼西亚 Indonesia Banten-Kab. Tangerang-Jl. Manis Raya No. 15. Kel. Kadu, Kec. Curug
Tel: +62 21 5918805
Email: export@kobe.co.id
matias.vinesian@kobe.co.id
Web: www.kobe.co.id

We are FMCG company established since 1979 with product range of healthy noodle, spices, sauces, coating mix flour and HORECA business. We have three major brands: Bali Kitchen, KOBE, and BonChili. Our products are No. 1 brand in its category in Indonesia and have been exported to many European and Asian countries.

ITPC (Indonesia Trade Promotion Center) Shanghai

8.2C4-02(14)

Address: 印度尼西亚 Indonesia Shanghai-Changning-Yan An West Road 2299 Shanghai Mart
Tel: 13162918772
Email: itpc.shanghai@kemendag.go.id
Web:

BaliFarm by RasaLokal Indonesia commits to preserve Indonesian culinary heritage and introduce its natural resources in the form of modern snacks that fit global millennials market. Foreseeing the new trend of healthier snack options, we create My Daily Banana, premium but affordable fruit chips made from the natural banana from our tropical country Indonesia.

Sungai Budi Group

8.2C4-02(16)

Address: 印度尼西亚 Indonesia DKI Jakarta-South Jakarta-Wisma Budi 8th Floor, Jl. HR. Rasuna Said Kav. C6
Tel: 62215213383
Email: vincensia.indarto@sungaibudi.com
Web: www.delcoco.co.id

SUNGAI BUDI GROUP (SBG) is a company engaged in the largest agribusiness in Indonesia that always strives to be the best by continuously maintaining the quality and consistency. Our products consist of: Cassava based, Palm based, Coconut Based, Rice Flour, Raw Coffee Bean, Rubber and other Industrial materials.

大熊产业股份有限公司 / BIG BEAR PHARMACEUTICAL CO., LTD.

8.2C4-03(02)

Address: 台湾地区-新北市-中和区中山路二段359巷1号5楼 Taiwan China New Taipei City -5F., No.1, Ln. 359, Sec. 2, Zhongshan Rd., Zhonghe Dist., New Taipei City 23586
Tel: 886-2-22265299
Email: bbo.com@msa.hinet.net
Web: www.bbo.com.tw

源自1985年，BIG BEAR PHARMACEUTICAL CO., LTD TAIWAN，研發以長時間菁釀高品質、純度高、口感好、功效強的活性酵素產品，讓人補充營養。大熊酵素產品應用在亞健康的能量與預防醫學，推廣以天然飲食的高質量及良好的生活習慣，達到預防疾病等功效，對於慢性病或衰老症狀提供幫助。
Since 1985, BIG BEAR PHARMACEUTICAL CO., LTD TAIWAN has developed a long-term active enzyme product with high quality, high purity, good taste and strong efficacy, which makes people supplement nutrition. Big Bear Enzyme Products are used in sub-health energy and preventive medicine to promote the high quality and good living habits of natural diets, to prevent diseases and to help chronic disease.

TAI PING YANG FOOD FACTORY

8.2C4-03(03)

Address: 台湾地区 Taiwan China Kaohsiung City-No. 12, Aly. 17, Ln. 290, Zhongshan E. Rd., Fengshan Dist., Kaohsiung City 830
Tel: 886-7-7014262
Email: anita@taipingyang.com.tw
Web:

Tai Ping Yang Food Factory has continuously strived to improve not only it existing products but also to create new high quality products while keeping true to the traditional flavors.

京工興業有限公司 / King Kung Health Food Co.,Ltd.

8.2C4-03(04)

Address: 台湾地区-新北市-新北市中和區新民街94巷12號 TAIWAN- New Taipei City-No. 12, Ln. 94, Xinmin St., Zhonghe Dist., New Taipei City 235, Taiwan (R.O.C.)
Tel: 886-2-22221808
Email: 200@kingkung.com
Web: www.kingkung.com

京工成立於2000年，以蔬菜湯茶起家，逐漸擴大規模協助國內外廠家OEM、ODM、研發生產台灣養生粥品、傳統茶品及即沖粉末飲品。
產品以安全、美味、營養、健康為目標，不添加人工色素、防腐劑，藉由HACCP食品安全系統，防制農藥殘留、大腸桿菌、塑化劑等污染，透過ISO-22000、HACCP、HALAL國際品保驗證，持續改善來提升品質，達到安全、美味、營養、健康的國際標準。
King Kung Health Food Co., Ltd. began with research and development of premium pre-packaged vegetable drink. Gradually, we expanded the scale to offer OEM and ODM service to domestic and foreign company, and subsequently created Taiwan instant powdered beverages and powdered bags.

TS BEEHONEY CO., LTD,

8.2C4-03(05)

Address: 台湾地区 Taiwan China KAOHSIUNG-NO.67 CHUNG CHING Stacy Huang., SAN MING DIST.,
Tel: +88673222127
Email: martin.tsh@gmail.com
Web: www.tsbeehoney.com.tw

Taiwan, China, one of the world's most comfortable islands, is blessed with a warm weather all year round. The natural ecology is diverse and plentiful so that brings up the variety of nectar source. Our Taiwan native honey is gathered from the vast and diverse landscapes of the south Taiwan. We control the whole process from the hive to the jar, ensuring that the honey with maximum nutritional value

紅布朗國際有限公司 / HOME BROWN INTERNATIONAL CO., LTD.

8.2C4-03(06)

Address: 台湾地区-高雄市-苓雅區三多四路110號22F-1 Taiwan China Kaohsiung-22F-1, No.110, Sanduo 4th Road, Ling Ya District
Tel: +88672696919
Email: emma.l@home-brown.com alicia.l@home-brown.com
Web: www.home-brown.com/ www.home-brown.com/online_shopping.php

「如何提供好的食物,給我們的身體」是我們想傳達給消費者的核心健康理念。
從原料開始,用心為每道工序把關,我們不斷創新更優質的天然有機食品,將原味、純淨、無添加的食物呈給消費者。紅布朗全系列有機穀物皆通過台灣慈心有機農產驗證,並由HACCP&ISO認證工廠嚴謹製作生產。來源簡單,有機認證,消費者安心。
Home Brown is born in the faith to protect and guard family, we consider the values of foods and share nutritious and healthy foods to our beloved family. Home Brown provides various goods of oatmeal. black sesame powder. dried nuts. bottled honey. lemon juice. pure grain powder and especially for the Kefir yogurt powder. Our products are produced in ISO22000 and HACCP certified factories.

荷旺企業有限公司 / HUWANG CO.,LTD

8.2C4-03(09)

Address: 台湾地区 台北市大同區延平北路2段247巷25號7樓-2 Taiwan 7F.-2, NO.25, LN. 247, SEC. 2,YANPING N. RD.,DATONG DIST.,TAIPEI CITY 10348,TAIWAN
Tel: +886.2.22055677 / +886.2.2205.5677
Email: benben@huwangtw.ocm benben@huwangtw.com
Web: www.huwangtw.com

在台擁有2-30年的銷售經驗,堅持手工,不添加防腐劑。不斷創新口味,給大眾耳目一新的感覺及更多選擇。雖然價位比起以往的彩色蝦餅高出許多,但堅信好的東西禁得起考驗,一步一步打造出與眾不同的獨特口感。並在台灣地区的各大百貨公司設立專櫃。
LOBSTER WITH BIG EYES With 2-30 years of sales experience in Taiwan Region, insist on manual, no preservatives.

PAH JI HUE' CO., LTD.

8.2C4-03(12)

Address: 台湾地区 Taiwan China TAIWAN-Taichung City -No. 210, Boguan Rd., West Dist., Taichung City 403, Taiwan (R.O.C.)
Tel: 886-4-2314-8259
Email: maniyeh.eatea120@gmail.com
Web: www.eatea120.com.tw

PAH JI HUE' CO., LTD. TEA Tea Bag
Tea Candy Tea cookie Tea Latte Tea ice cream

HAIREI FOODS CO., LTD.

8.2C4-03(07)

Address: 台湾地区 Taiwan China Xiangshan Dist-Hsinchu City -No. 17, Ln. 685, Niupu E. Rd., Xiangshan Dist., Hsinchu City 300
Tel: 886-3-5261115
Email: e91422109@msn.com
Web: www.hairei.com.tw/about01.html

We have launched Hairei Pure Pork Meatballs and Health-Oriented Meatballs product families, featuring authentic local flavor, health orientation and al dente and bouncy texture.

豐稷食品有限公司 / Fenj Ji Food Co.,Ltd

8.2C4-03(10)

Address: 台湾地区 新店區-新北市-新北市新店區寶興路45巷3號4樓 Taiwan Xindian Dist-New Taipei City-4F.,No.3,Ln. 45,Baoxing Rd.,Xindian Dist.,New Taipei City 231,Taiwan.
Tel: 886-2-8978-1049#2019
Email: BS_201@cherrygrandpa.com.tw
Web: www.cherrygrandpa.com.tw

櫻桃爺爺於西元2005年創業,是專業的製糖製菓公司。白手起家成為手工匠人。嚴選世界優質原物料,融合寶島特色食材。研發生產高品質牛軋糖、南棗核桃糕、鳳梨酥、中式酥餅,冷凍糕點等。
打造世界級標準的工廠,擁有ISO2000、HACCP、HALAL認證,產品均有SGS檢驗,提供最安全且美味的休閒食品。
CHERRY GRANDFATHER started business in 2005, searches for premium ingredients in the world blending into Taiwan special ingredients to produce the highest qualities' Nougat, Walnut & Date Cake, Pineapple Cake, Chinese pastry and frozen cake. CHERRY GRANDFATHER built the world-standard factory and certified of ISO22000/ HACCP、HALAL. Promising customer healthier, qualities and tasty leisure foods.

明奇食品有限公司 / Man Chi Food Co.,Ltd

8.2C4-03(13)

Address: 台湾地区 田尾鄉-彰化縣-彰化縣田尾鄉南曾村福德巷198.3.4.5號 Taiwan NO.198-5, FUTE LANE, NANTSENG VILLAGE, TIENWEI HSIANG, CHANGHUA COUNTY, TAIWAN
Tel: +88648832641
Email: mincher.food@gmail.com
Web: www.e-cakes.com.tw

"明白用料、奇手巧藝"是創辦人堅持之原則,用料明明白白,不取巧偷料,而時時具創意巧思,推成出新,滿足消費者嚐新挑剔之口感則是公司永續經營之品牌核心價值;品質管理系統通過ISO 22000、HACCP認證,並於2012年榮獲台灣百年燈會指定食品,其品質之優,不言可喻。
The principle of "Natural ingredients with Skillful Technique" is always Mr. Yen's insistence. Using the best quality ingredients to make cookies, Ming Chi Food Co., Ltd. insist on creating a newly inspired cookie flavor to satisfy customer's taste. Ming Chi is also certified according to the latest ISO 22000 standard and HACCP Certificate.

櫻軒庄國際企業有限公司 / YING XUAN ZHUANG INTERNATIONAL CO., LTD.

8.2C4-03(08)

Address: 台湾地区 中壢區-桃園市-國泰街99號6F Taiwan China ZHONGLI DIST.-TAOYUAN CITY-6F. NO. 99, GUOTAI STREET
Tel: +886 3 4363858
Email: info@yingxuanzhuang.com
Web: www.yingxuanzhuang.com

櫻軒,專門從事台灣茶葉出口業務。我們尊重我們的每一位客戶,並且致力於尋找優秀的供應商,長期下來我們也與各個供應商保持著良好的合作關係。我們致力於進軍獨立的國外超市,國外食品批發商,國外連鎖店…等。因此我們也建立了專業的團隊,一定會成為您業務上的最佳合作夥伴,而且也肯定會為您提供非常實惠的價格,以讓您在交易市場上擁有強而有力的競爭力。
YING XUAN ZHUANG INTERNATIONAL CO., LTD, specialize in the Taiwan Tea export business. Our target is the independent foreign supermarkets, food wholesalers abroad, foreign chain stores and so on. Therefore we have built a professional team, and we are sure to be the best partner of your business. We definitely provide a very substantial price to you so that you make an effective business deal.

WEI-I FOODSTUFF CO.,LTD

8.2C4-03(11)

Address: 台湾地区 Taiwan China TAIWAN-Pingtung County-NO.35,Jingjin Rd.,Fangliao Township
Tel: 886-7-5510770
Email: weii@hibox.hinet.net
Web: www.wei-i.com.tw/index.html

味一食品秉持著製造好食品必須擁有好材料的信念,替消費者嚴格把關挑選原料,其原物料魚肉需通過國際標準安全檢驗,如生菌數、組織胺、重金屬:汞、鉛、鎘等檢驗數值符合規範後,才能進行加工製造。
在生產製程中,不添加味精、色素、防腐劑,口感溫潤,纖維細緻,全家大小都適合享用的優質魚鬆。
The core concept of WEI-I is that "good ingredients guarantees good product".
We delicately choose fishes that meet international food safety standard for costumers. The analysis such as, for number of heavy mental have to be done before food process. Without artificial additives, preservatives, coloring added. WEI-I fish floss tastes natural, delicious, ideal for every children and adults.

LU-YEN TEA CO., LTD

8.2C4-03(14)

Address: 台湾地区 Taiwan China TAIWAN-Nantou County-1F., No. 68, Luzhang Rd., Lugu Township, Nantou County 558, Taiwan (R.O.C.)
Tel: 886-49-2751786
Email: luyenteastore68@yahoo.com.tw
Web:

LU-YEN TEA CO., LTD Da Yu Ling Tea;Lishan Tea;Sun Link Tea; Alishan Tea; Alpine Tea;Dongding Tea; Sun Moon Lake Black Tea
In 2011, "Lu Yen Tea Store" developed a brand called "Cloudy Wonderland", which was taken from Chinese classical poetry and highlighted the characteristics of this series of products. This series of products is produced by the difference in temperature between day and night.

金蘭食品股份有限公司 / KIMLAN FOODS CO., LTD.

8.2C4-03(15)

Address: 台湾地区 桃園市-大溪區-介壽路236號 Taiwan China Taoyuan-Daxi-No.236 Jieshou Road
Tel: 886 3 380 1226 / 886 3 3801226
Email: John-666@livemail.tw amos@kimlan.com
Web: www.kimlan.com

釀造台灣最高品質的醬油,取得ISO22000與HACCP認證,清真認證,行銷全世界26個國家地區,開發綠色產品,包含非基因改造黃豆醬油、無添加醬油、有機醬油、台灣在地有機醬油,年產量5萬噸,是台灣最重要的醬油品牌。
Brewing the highest quality soy sauce in Taiwan, obtaining ISO22000 and HACCP certification, halal certification, marketing to 26 countries and regions around the world, developing green products, including non-genetically modified soybean oil, no added soy sauce, organic soy sauce, organic soy sauce in Taiwan, annual output 50,000 tons, the most important soy sauce brand in Taiwan.

小農有機日記商行 / SIVA ORGANIC LIFE FIRM

8.2C4-03(18)

Address: 台湾地区-花蓮縣-花蓮縣鳳林鎮中正路一段365號 Taiwan China Fenglin Township-Hualien County-No. 365, Sec. 1, Zhongzheng Rd., Fenglin Township, Hualien County 975
Tel: 886-2-86743616 / 0987869248
Email: organic358@gmail.com
Web: www.facebook.com/sivaorganiclife

SIVA ORGANIC LIFE FIRM Organic Triple color Turmeric PowderOrganic Triple color Turmeric Tablet Organic Turmeric Organic Turmeric Essential

Kuo Yuan Ye foods Co.,Ltd.

8.2C4-03(21)

Address: 台湾地区 Taiwan China Taoyuan City-No. 33, Ln. 9, Qingnian Rd., Yangmei Dist., Taoyuan City 326
Tel: 886-2-28382700
Email: e00012@kuos.com.tw
Web: www.kuos.com

Focus on the interpretation of traditional cakes and innovation, brand transformation from the stable development of all-inclusive, innovative ideas to the traditional heritage, the same is honest to make cakes, sincere offer, adhere to quality as the original intention.

有餘堂茶莊 / YOU YU TING TEA LIFE CO.,LTD

8.2C4-03(16)

Address: 台湾地区 台灣台南市文賢路242巷20號 Taiwan China No. 20, Lane 242, Wenxian Road, Tainan City
Tel: 886-6-3587402
Email: d2580438@ms52.hinet.net
Web:

有餘堂創始于2003年四月,融合了台灣人文歷史的概念,也跳脫傳統茶莊的形式,獨創品牌的方式,執著於品質與包裝的心力,只求給愛茶的朋友有一份歸屬感,堅持文化的傳承與台灣本土的茶葉,我們有自有茶園及製茶廠位於南投衫林溪竹山以及梨山翠巒,自產自銷,專賣台灣茶,不以進口茶混充,童叟無欺,品牌保證,品質優良。
Founded in April 2003, Yutang has integrated the concept of Taiwan's human history, and has also escaped the form of traditional tea houses, the way of creating original brands, and the dedication to quality and packaging, and only wants to have a sense of belonging to friends who love tea. Insist on the inheritance of culture and tea in Taiwan, China.

中祥食品工業股份有限公司 / CHUNG-HSIANG FOODS IND. CO., LTD.

8.2C4-03(19)

Address: 台湾地区-台北市-文山區木新路2段275號1樓 Taiwan China TAIPEI CITY-NO.275, SEC. 2, MUSIN RD., WUNSHAN DISTRICT
Tel: +886-371-3688
Email: bigbow661008@gmail.com
Web: www.chfoods.com.tw

中祥食品 | 全家人的元氣補給品
CHfoods | SODA CRACKERS, NOUGAT SANDWICH CRACKERS

Good Plenty Industrial Co., Ltd.

8.2C4-03(22)

Address: 台湾地区 Taiwan China Dalong St-Taipei City- No.149, Dalong St., Datong Dist., Taipei City 103
Tel: 886-2-25912211
Email: goodfin@ms43.hinet.net
Web: www.good-plenty.com.tw

好得壯公司專營加工鮑魚、燕窩、佛跳牆、等中華傳統美食,通過ISO 22000、HACCP國際食品衛生安全驗證以一吉膳的品牌供應市場,有調理食品、罐頭食品及餐廳業務專用溫熱即食家庭用之各類佳餚,也可客製化ODM、OEM產品及搭配多種精美禮盒。
We, Good Plenty Industrial Co., Ltd have been dedicating in processing High Quality seafood for over 30 years.
With – ISO 22000, HACCP, HALAL Certificates and for export, we provide prepared food, canned, and tonic health cuisines to markets, and diverse customized products for customers need.

味全食品工業股份有限公司 / WEI CHUAN FOODS CORPORATION

8.2C4-03(17)

Address: 台湾地区 台北市-台北市中山區104松江路125號10樓 Taiwan China Taipei-NO.125, SUNGJIANG RD., TAIPEI
Tel: 886-2-2506-5020#1142
Email: Angel_Chen@weichuan.com.tw
Web:

Factories Taichung Factory: Tinned food, soy sauce, MSG gourmet powder, seasonings, fresh juice.
Doliu Factory: Tetra Pak sterilized milk, soy milk, rice milk, juice, cooler drinks, fermented milk, gel.
Kaohsiung Factory: Milk and pudding.

虎牌正通實業股份有限公司 / Tiger Brand Cheng Tung Industrial Co., Ltd.

8.2C4-03(20)

Address: 台湾地区 宜蘭縣-五結鄉-宜蘭縣五結鄉利興三路5號 Taiwan China Yilan County-Wujie Township-No. 5, Lising 3rd. Rd., Wujie Township, Yilan County
Tel: +886-3-9905989
Email: tigerfood.tw@gamil.com tigerfood.tw@gmail.com
Web: www.tigerfood.com.tw

1970年,林明通先生創辦正通行,開婚"虎牌米粉"品牌,成為台灣第一個將埔里米粉製作成小包裝的公司。於1995年成立彰化和美廠,1997年再成立台北石碇廠,2007年受宜蘭縣政府熱情邀約,於利澤工業區成立宜蘭廠,設立全台第一條現代化米粉生產線,同時正式增資更名為"虎牌正通實業股份有限公司"。
Rice Noodle is a unique traditional cuisine from Taiwan, Cheng-Tung Industrial Co., Ltd., was established in June of 1970, as the same time set up the Brand of Tiger. In May of 2007, we opened an interaction Rice Noodle Factory in Yilan county.Now we are making the point of international of trade. We believe that our product will be made diffident view with Taiwanese.

新蓬萊食品股份有限公司 / XIN-PENG-LAI FOODS CO., LTD

8.2C4-03(23)

Address: 台湾地区 桃園市中壢區月眉路2段248巷85號 Taiwan China NO.85, LN.248, SEC.2, YUEMEI RD., ZHONGLI CITY, TAOYUAN COUNTY 320
Tel: 03-4986018
Email: mk@xpl.com.tw
Web: www.xpl.com.tw

本公司以祖傳六十餘年經驗,精緻各式豆腐乳,行銷全台,享譽中外,為台灣豆腐乳第一品牌。江記產品採用精選黃豆、糙米、米酒、砂糖,絕不使用防腐劑、人工色素、糖精,以傳統技術與最新設備,嚴格品質管制,精心釀造而成。
jiangJi is the top brand of fermented bean curd which has variety of fermented bean curd.refining.sales throughout Taiwan region. It has own fame both at home and abroad for 6decades.Products in JiangJi are used adopts selected beans,brown rice,ricewine and sugar instead of preservations,artificial colors and sweeteners.JiangJi has traditional technology with the latest equipment and high quality control.

KING LUCKY FOOD IND. CORP / KING LUCKY FOOD INDUSTRIAL CORP.

8.2C4-03(24)

Address: 台湾地区 Taiwan China TAIPEI-2F-6. NO.5, LANE 1, SEC.1, NANKING E. ROAD
Tel: +886-2-2581-8402#26 / +886-2-25818402
Email: sales@kinglucky.com
Web: www.kinglucky.com

King Lucky Food Ind. Corp. was established in 1979, which distributes various beverage and canned-food in Taiwan.
With trade marks of "Chin Chin", King Lucky has been diversifying new products and looking for rapid business growth. Efficiency requirement and high sanitation standard in purchasing, designing, food processing and marketing have created many worldly renowned products of the company.

精益珍食品有限公司 / JING JIH JEN FOOD CO., LTD.

8.2C4-03(27)

Address: 台湾地区 台灣-彰化縣-員林市員東路一段浮圳南巷一弄16-1號 Taiwan China Chang Hua-No.16-1, Alley 1, Fwu Tzuenn South Lane, Sec.1, Yuan-Tung Rd., Yuan-Lin City,
Tel: 886-48331725
Email: jjj@jingjihjen.com.tw
Web: www.jingjihjen.com.tw

精益珍食品有限公司,在台灣專業生產和銷售煎餅,巧克力和草莓優格味甜甜圈,洋蔥圈等休閒食品。
公司創業於1963年,同時從歐美、日本、台灣地区引進的先進食品生產設備,是一家集開發、生產、銷售於一體的現代食品企業。近年來更以“精益珍”的巧克力和草莓甜甜圈為公司目前的主導產品,它採用歐美所監製製成的巧克力配方,是休閒、旅遊的好選擇,更是饋贈親朋好友的最佳禮品。
JING JIH JEN FOOD CO., LTD. was founded in Taiwan from 1963. We specializes in confectionery, mainly producing and selling chocolate puffed snacks, strawberry yogurt puffed snacks, mini seaweed pancake, mini sesame pancake , and onion rings (original flavor and curry flavor).
The safety and quality of food are always the primary issues to us. "High quality is our guarantee to customers."

點線麵餐飲股份有限公司 / PLN Food Co.,Ltd.

8.2C4-03(25)

Address: 台湾地区 台灣-桃園市-桃園市八德區福德一路237號 Taiwan China Taoyuan City- No. 237, Fude 1st Rd., Bade Dist., Taoyuan City 334
Tel: 886-3-371-1379
Email: jennifer@pln.com.tw
Web: www.pln.com.tw

點線麵所有產品皆通過SQF及清真認證;SQF是目前國際上公認最全面且最嚴謹的食品管理驗證體系。點線麵秉持「新鮮」、「安全」、「美味」的製麵原則,從小麥篩選到原料搭配,堅持選用安全、單純的原材料。
為提供給消費者最好的品質,點線麵引進最新型全自動製麵生產設備,麵粉倒入真空麵粉攪拌機,並經多層次壓延增加麵糰的彈性及口感,麵條裁切、烹煮後置入-35度C急速冷凍,維持麵條新鮮口感,更因此不須添加防腐劑。
All products have passed SQF and Halal certification.PLN’s principle is to provide fresh, safe and delicious noodles.The ingredients we choose are non-toxic.In order to make the texture taste better, we make the dough into a sheet by repeatedly pressing,which make the noodle taste chewier and firmer.After cutting the dough sheet,we send the noodles to IQF. This step also keeps noodles fresh.

百家珍酿造食品股份有限公司 / Pai Chia Chen Brewery and Foods Co., Ltd.

8.2C4-03(28)

Address: 台湾地区 嘉义县-太保市-嘉太工业区光复路9号 Taiwan Chiayi County -Taibao City-No. 9, Guangfu Rd., Jiatai Industrial Park
Tel: +86 59183286788
Email: twpccv@163.com
Web: www.paichiachen.com

百家珍为台湾最大健康醋制造商与品牌商,亦为ODM之专业生产配合者,数十年来一直本着维护全民健康的宗旨,以专业的酸酵技术默默的钻研有助维护人体健康的醋品,秉持一贯精神—「坚持」,坚持专业的技术、坚持最好的品质、坚持最完善的服务,正因为这股坚持而带着「百家珍」成为专业健康醋市场的领导大厂,并且将健康活力的品牌形象深植于消费者心中。
Pai Chia Chen upholds the purpose of protecting people’s health, and by utilizing professional fermentation technology, the company researches intensively into vinegar products that help with maintaining human health and is dedicated to promoting the new concept of "vinegar is a healthy beverage".

源天然農業有限公司 / ORIGIN AGRICULTURE CO. LTD.

8.2C4-03(26)

Address: 台湾地区 台東縣-池上鄉-中山路99號 Taiwan China TAITUNG COUNTY-CHIHSHANG TOWNSHIP, -NO.99, ZHONGSHAN RD.,
Tel: +866-89-360960
Email: ASHLEY@ORICE.CC
Web: www.orice.cc

「源天然」位處台東縣池上鄉,獨家「黑纖米」品種為台灣原生種非糯性有色米。於2017年榮獲食品米其林二星獎榮譽,2018年獲得Monde Selection國際食品品質評鑑國際品質金獎,為雙料國際金牌冠軍黑纖米。富含抗性澱粉與花青素。
Origin Agriculture is a heirloom Black Indica Rice crop grown, using natural farming methods. Black Indica Rice is the most special rice in Taiwan, the rice has high antioxidant content, and has been shown to help prevent diseases associated with chronic inflammation, such as diabetes, and cardiovascular diseases.

家田企業有限公司 / JIA TIEN INDUSTRIAL CO., LTD

8.2C4-03(29)

Address: 台湾地区 里港鄉-屏東縣-屏東縣里港鄉中和村中和路33-1號 Taiwan Pingtung Hsien-Pingtung City-No.33-1 Zhonghe Rd.,Ligang Township,Pingtung County 905,Taiwan
Tel: +886-8-7733558 / +88687733558
Email: dt117a@gmail.com
dah.tien@msa.hinet.net
Web: www.dahtien.com
jiatienindustrialco.,ltd

DahTien Ocean is the most professional and complete fish manufacturing company which specializes in processing of fish products in Taiwan.
In the past we have also been accredited with ISO 22000 & HACCP international certificates. In 2009 our products have also been certified HALAL.

瓜瓜园企业股份有限公司 / KUA KUA YUAN ENTERPRISE CO.,LTD.

8.2C4-03(30)

Address: 台湾地区 台南市新化区中正路127巷31号 Taiwan China No.31, Ln.127, Zhongzheng Rd., Xinhua Dist., Tainan City
Tel: +86-18616827342
Email: eric77218@gmail.com
Web: www.kky.com.tw

瓜瓜园藉由红薯产地到餐桌的串连整合,以一条龙的生产模式,从健康种苗生产供应,种植契作管理,农务代工管理,采收分级储存,生鲜地瓜销售,地瓜加工品开发生产,通路配销,品牌门市经营,国际贸易销售一元化发展,可完整去使用地瓜原料,达到最高运用价值,在市场亦可依客户需求提供多样化,客制化产品,达到产销合作之优势通路。
主要产品:生鲜地瓜。冰烤蕃薯,地瓜薯条。地瓜球。地瓜脆片,蜜地瓜,地瓜酥等地瓜系列加工商品
We, a professional sweet potato manufacturer, specialize in various types of sweet potato such as plant,process and classify. Our products meet different standards such as HACCP, ISO22000, Good Agriculutral Practice (GAP). We are ready to supply you with good quality sweet potato at competitive prices.

Sweet Garden Food Co., Ltd.

8.2C4-03(31)

Address: 台湾地区 Taiwan China Taichung City-9F., No.101, Sec. 2
Tel: 0573-87660000
Email: arthur@herbfood.com.tw
Web: www.herbfood.com.tw

Sweet Garden was established in 1990 and has been expanded its business operation in Taiwan region as well as internationally ever since. With industry-leading quality, Sweet Garden was granted Taiwan Organic certificate, ISO22000, HACCP, as well as HALAL.

松霖食品有限公司 / SONG LIN FOOD LTD.

8.2C4-03(34)

Address: 台湾地区 台灣地區-南投市-南投市中興路337號 Taiwan China Nantiu City-No.337 Zhongxing Rd. Nantou City Nantou County 540
Tel: 13816982577
Email: songlinfood@gmail.com
Web: hjlteahouse.com

古有謝金火者,秉性忠厚,嚐獲鹿谷人林萬順分贈茶苗百株。唐山人江水來愛其厚道,自動授以製茶絕藝。江水來製茶出神入化,巧奪天工,技藝之精,無出其右。謝金火既盡得傳,感念恩人德澤,以「江林」名為子,以「謝江林茶莊」題其肆。謝江林繼志述事,畢生以種茶、製茶為業。謝金火,先祖也,生於民國前二十年;謝江林生於民國六年,祖父也。林萬順、江水來二氏,年歲與先祖相當。
Long time ago, there was one faithful man called Xie Jinhuo. He was donated for one hundred of tea plants by Lugu inhabitant, Lin Wanshun. Jiang Shuilai from China admired Xie's for his faithfulness; he taught him the tea producing skills. Jiang Suilai was a real master in producing tea; he is so much talented that no one can defeat him Xie Jinhuo inherited from all Jiang's skills. For gratitude.

萬岱豐食品股份有限公司 / WAN TAI FENG FOOD CO., LTD

8.2C4-03(37)

Address: 台湾地区 桃園市-桃園區-桃園市桃園區中正路786號4樓之2 Taiwan Taoyuan City 33046-Taoyuan Dist.-4F.-2, No. 786, Zhongzheng Rd.,
Tel: 886-03-3609251 / 886-3-360-9251
Email: wtf28168@ms58.hinet.net
Web: www.wtf.com.tw

萬岱豐食品股份有限公司 (以下簡稱W.T.F.) 成立於1995年,為一家專門製造蘆薈飲品的台灣食品廠商。我們的生產作業流程完全遵照 ISO22000、HACCP、英國零售商協會(BRC),國際食品衛生安全控管系統製造,並均通過驗證。W.T.F.以創新研發、優良品質、誠信商譽之經營理念,行銷世界各國家地區,獲得國際間各買家及各通路市場之信任與肯定。
Wan Tai Feng Food Company (W.T.F. for short) was established in 1995, and specialized in manufactured Aloe Vera Juice in Taiwan. Our production lines are certificated by ISO22000、HACCP system and BRC, strictly regulated by international food safety control to assure our products are safe.

金利食安科技股份有限公司 / KEE FRESH & SAFE FOODTECH CO., LTD.

8.2C4-03(32)

Address: 台湾地区 屏東縣- 屏東市-台灣屏東縣屏東市園西街15號 Taiwan China Pingtung County- Pingtung City-No.15, Yuanxi St., Pingtung City, Pingtung County 90093
Tel: 886-8-756-2188
Email: sharonhsu@kfs-foodtech.com
Web: www.kfs-foodtech.com

<金利食安科技股份有限公司>為亞洲第一家以『HPP超高壓低溫食品加工技術』為主要訴求的國際型FSSC 22000食品專業加工廠,為寶島台灣食品產業盡一份心力,與國內外食品界一同使用HPP技術建立符合消費趨勢的新鮮健康無添加美味食品.公司業務為提供各類食品同業HPP低溫殺菌代工服務,利用HPP超高壓低溫食品加工技術的獨特優勢來提供創新產品服務,延長商品上架保鮮時間。
KFS provides High Pressure Processing(HPP) Technology as a service to the food industry. We offer the full HPP experiences from product development to the launch of new, innovative products-- KFS offers HPP total solution to our customers. In increasing the shelf-life as well as the quality of these products, HPP can help customers broaden markets, increase consumer confidence.

DOYOUBO INDUSTRY CO., LTD.

8.2C4-03(35)

Address: 台湾地区 Taiwan China Pingtung County -No. 2-8, Fengzhen Rd., Zhutian Township, Pingtung County 911
Tel: 886-8-7711116
Email: mitdub67@gmail.com
Web:

DOYOUBO INDUSTRY CO., LTD.
1.DYB Aged Artisan Naturally Brewed Soy Sauce
2.DYB Artisan Lite Naturally Brewed Soy Sauce / Less sodium
3.DYB Golden Smile Naturally Brewed Soy Sauce No Sugar Added
4.Organic Black Bean Tea

澳大利亚新西兰健康产业集团 / Australia & New Zealand Health Products Limited

8.2C5-01

Address: 澳大利亚 Australia Victoria-Melbourne-Level 8,167-169 Queen Street
Tel: +61396400566
Email: shf368@gmail.com
Web: anzhpl.com.au

澳大利亚新西兰健康产业集团成立于2016年,总部在墨尔本,是集生产、研发、销售为一体的健康产业集团。公司董事局主席肯·史密斯是维多利亚州立法议会前议长,也是澳大利亚中国工商业委员会维多利亚州现任主席。公司目前向中国出口澳大利亚和新西兰的蜂蜜,葡萄酒,保健品,新鲜水果,食品和美容护肤品。
我们期待与您的合作!
ANZHPL founded in 2016 in Melbourne. It is a health industry group that integrates production, R&D and sales. We are currently exporting Australian&NZ made honey, wine, supplements, fresh fruits, food and beauty products to China. We look forward to working with you!

Jellico Food Co., Ltd.

8.2C4-03(33)

Address: 台湾地区 台湾 Taiwan China Nantun Dist-Taichung City-No. 8, Gongyequ 18th Rd., Nantun Dist., Taichung City 408
Tel: 886-919681115
Email: 2975858865@qq.com
Web: en.jellicofood.com

fruit pudding and creamy ice bars in Taiwan. With over 20 years' experience in the research and development of jelly products, we have confidence to supply you the best jelly products at the most competitive prices.

新力香食品有限公司 / HSIN LI HSIANG FOOD CO., LTD.

8.2C4-03(36)

Address: 台湾地区 新北市-三峽區介壽路一段338巷12號 Taiwan New Taipei City-No. 12, Ln. 338, Sec. 1, Jieshou Rd., Sanxia Dist.
Tel: 886-2-86743616
Email: service@momkitchen.com
Web: www.momkitchen.com

台灣唯一通過TQF、CAS、ISO22000、HACCP認證專業肉鬆、魚鬆製造廠,嚴格品質管制、堅持全產品不添加防腐劑、味精、人工香料與色素。
We are a professional manufacturer in Taiwan who specializes in producing pork floss and fish floss. Our factory is also certified with TQF, CAS, ISO22000 and HACCP. Strict quality control and do not add any artificial additive are our emphasis.

TOMRA / BBC Technologies / BBC Technologies

8.2C5-02

Address: 新西兰 Hamilton-34 Ingram Road New Zealand Hamilton-34 Ingram Road, RD2
Tel: +64276060680
Email: helen.wang@tomra.com
Web: bbctechnologies.com

Joined TOMRA in 2018, BBC Technologies is the global leader in complete turnkey solutions for grading, optimizing, and packing small fruit. TOMRA Food designs and manufactures sensor-based sorting machines and integrated post-harvest solutions for the food industry. TOMRA was founded in 1972 and now provides technology-led solutions that that optimize resource recovery and minimize waste.

大江生醫股份有限公司 / TCI Co., Ltd.

8.2C5-03

Address: 台湾地区 臺北市-內湖區-港墘路187號8樓 Taiwan China Taipei City 114-8F., No.187, Gangqian Rd., Neihu Dist.
Tel: +886-2-8797-8065
Email: helen.chuang@tci-bio.com
Web: www.tci-bio.com

TCI大江生醫創立於1980年，目前全球共有1,150多位員工。過往數十年與眾多客戶夥伴，在全球打造出許多暢銷產品，TCI大江生醫每年生產數億顆的錠劑、膠囊等健康食品，數千萬瓶的機能性飲品及數百萬片的面膜及精華液等產品。銷售全球數十個國家，每年加入、並改善上億人的生活。公司所有同仁無時無刻都以研發更高效能的產品，以「加入並改善消費者生活」作為最重要的目標。
TCI Co., Ltd, was founded in 1980, and now has over 1,150 employees worldwide. We have created many best-selling products around the world over the past few decades. We continuously develop more effective products, and set "Join and Delight Consumer's Life" as our most important goal.

宏亞食品股份有限公司 / HUNYA FOODS CO., LTD.

8.2C5-04

Address: 台湾地区 新店區-新北市-新北市新店區寶興路45巷8弄3號5樓 Taiwan China New Taipei City-5F., No. 3, Aly. 8, Ln. 45, Baoxing Rd., Xindian Dist., New Taipei City 231
Tel: 886-2-29180786
Email: hsiu@hunya.com.tw
Web: www.hunya.com.tw

宏亞自1976年創立，推出第一項巧克力產品，始終稟持著「誠信、創新、品質、服務」的精神，以追求完美的責任感，推出讓消費者迷戀的甜美滋味商品，為消費者的生活開啟更多愉悅的好氣氛。
HUNYA FOODS CO., LTD.
chocolate / wafer / buttercookies / puff pastry / cookies giftset

鮮活實業有限公司 / FRESH LIFE ENTERPRISE CO., LTD.

8.2C5-05

Address: 台湾地区 西區-嘉義市-嘉義市西區新民路111號 Taiwan China West Dist-Chiayi City-No. 111, Xinmin Rd., West Dist., Chiayi City 600
Tel: 886-5-2367999
Email: yoyo@freshlife.com.tw
Web: www.freshlife.com.tw

鮮活實業有限公司致力於生產健康取向的食品，從進口蒟蒻粉、製造蒟蒻仿生食品、蒟蒻麵到2018年正式轉型做凝膠類口感顆粒、果醬與果汁開發，每項產品都希望能在食品多元化的社會帶來一絲健康的氣息。
Fresh Living Industrial Co., Ltd. is committed to the production of healthy oriented foods, from the import of glutinous rice flour, the manufacture of bionic raw food, glutinous noodles to the formal transformation of gel-like granules, jams and juices in 2018. Each product is expected to be in food. A diverse society brings a touch of health.

金门酒厂实业股份有限公司 / Kinmen Kaoliang Liquor Factory Industry CO.,LTD.

8.2C5-06

Address: 台湾地区 金门县-金宁乡-桃园路1号 Taiwan China Kinmen County 892-Kin Ning Shiang-No.1, Tao Yuan Road
Tel: 0592-5594848-7852
Email: 1292454734@qq.com
Web: www.kkl.com.tw/sc/index.aspx

1952年9月，酒厂初名九龙江酒厂，1956年更名为金门酒厂，1992年金门解除战地政务之后，金门酒厂改隶属金门县政府，于1998年2月改制为金门酒厂实业股份有限公司。金门酒厂得天独厚，拥有岛上绝佳的水质、空气、气候及原料四大天然酿酒条件，严格遵守“三高二低一翻”独特固态发酵酿造工艺，经花岗岩洞长时间窖藏，所酿高粱酒清亮透明、芳香幽雅、醇厚甘冽、回味悠长。六十余年，受到举世的好评。
KKL was established in 1952, and has been flourishing ever since for over half a century.
When the Fukien Provincial Government relocated to Taiwan in 1956, it was renamed as "Kinmen Distillery".
This stage saw the increase in production capacity and KKL formally became a Government monopoly.
The company was formally privatized and reformed as Kinmen Kaoliang Liquor Inc.

澳大利亚洛伊斯达酒庄 / Australia Royal Star Co. Pty Ltd

8.2C6-01

Address: 澳大利亚 新南威尔士州-伯伍德-2 伯伍德路 Australia New South Wales-Sydney-2 Burwood Road Burwood
Tel: +61 425 796 889 / +61 02 89719086
Email: ahmalexxu18@gmail.com
Web: www.royalstarwine.com.au

澳洲洛伊斯达酿酒集团是一家以生产和出口高品质澳洲红酒为主要业务的公司，我们的酒庄采用传统木桶酿造工艺和现代化技术相结合，具有500万升的红酒原浆储存，23种不同种类,并有多年的红酒出口经验，是澳洲政府批准的注册出口商，每批出口的红酒都会经过澳洲政府审核，每款酒都是经过酿酒师精心调制，入口柔顺，回香长久。每年都会与世界各地的酒商和酒厂互动，了解全球葡萄酒的消费趋势，及时调整产品结构和销售策略。
Royal Star Wine Group is a wine export group created to greatly expand the export opportunities for Australia wineries. We are a specialist wine packaging and exporting group whose goal is to streamline the export process for our customers and offer a fantastic portfolio of Australian wines to the world.

Natural Links Pty Ltd

8.2C6-02

Address: 澳大利亚 Australia NSW-Sydney-S6, Capital Square, 730-742 George St
Tel: 0061425368350
Email: st.z6666@outlook.com
Web: www.prbeverages.com

Natural links 是来自澳大利亚、专注经营山泉水行业的瓶装商、批发商和进出口供应商。自20世纪90年代以来，Natural links一直致力于供应天然泉水，我们的水源地位于澳大利亚新南威尔士州中部海岸高地 Peats Ridge，周围环绕着数千英亩无污染的原始国家森林公园 。Natural links专门从事制造和灌装250毫升到15升PET瓶装天然泉水公司，业务范围遍及澳大利亚全境和国际市场。
Natural links is a bottler, wholesaler and import and export supplier from Australia that specializes in the spring water industry. Natural links has been supplying natural spring water since the 1990s throughtout Australia. Our water source is located in Peats Ridge, the highlands of central New South Wales, Australia, surrounded by thousands of acres of unspoiled pristine national forest parks.

C.L.H.A. PTY LTD

8.2C6-03

Address: 澳大利亚 Australia QUEENSLAND-MONKLAND-38-42 EDWIN CAMPION DRIVE
Tel: +85225467058
Email: chaolien@netvigator.com
Web:

Part of a vertically integrated group of companies. Farming, Processing and Marketing of Quality Australian Macadamias.

ELEGANT CAPITAL INC

8.2C6-05

Address: 美国 United States of America 18221 3 SUSANA RD COMPTON CA 90221
Tel: +862151697770
Email: gm.support@lanxintrade.com
Web: www.bitsymore.com/index.php?s=/pc/product/index/type/1.html

ELEGANT CAPITAL INC is an enterprise only focus on imported products.Our company based on the most high quality and best-selling products supplier, we are dedicated to develop the mainland of China, thus providing high quality and security products for Chinese users.

ARTIFICES S.J. S.A.

8.2C6-06

Address: 巴拿马 Panama Panama-Panama-Eusebio A. Morales. Corregimiento Bella Vista, PH Sevilla Suites.
Tel: +8615882153931
Email: jastudillo@artificesglobal.com
Web: artificesglobal.com

We represent large international firms particularly from Asia, to which we provide strategic advisory and consulting services. We generate the right business environment for companies of different cultures and help to enter markets in Asia or America.Our structure and networking will allow you to access new markets, customers and resources to maximize the profitability of your business.

SMC International Inc.

8.2C6-07

Address: 美国 United States of America NY-Plainview-260 Newtown Road, Plainview NY 11803 USA 公司Tax ID 11-3349356.
Tel: (516)249-6888
Email: shandgmach@aol.com
Web:

Established in 1996, SMC International is an American professional mechanical hardware, stainless steel tableware, seafood, meat, wine and olive oil imports and export operator. The company is the strategic business partner of many wine groups in the United States for the domestic Chinese market.

PT Agarindo Bogatama

8.2C6-09

Address: 印度尼西亚 Indonesia Jakarta Pusat-Grand Kebon Sirih, JL. Kebon sirih raya, No.35
Tel: 62-213911539
Email: soerianto@agarindobogatama.com agarindo.bogatama@gmail.com
Web: www.agarindobogatama.com

Agarindo Bogatama Is a privately owned company founded in 1988.Started with a production capacity of 10 tons/m in 1990. 2008 the production capacity has reached 150 tons/m (1800 tons/y).Agar powder is mostly produced fr cultivated seaweed Gracilaria.As well as fr wild harvested Gelidium&Pteroceladia.30% of the production is exported to Jpn&USA; the remaining production is for the domestic market.

Sweetrip GmbH

8.2C6-11

Address: 德国 Germany Berlin-13595-Goetelstrasse 86
Tel: +86 28 85228666-853
Email: guo@sweetrip.com.cn
Web: www.sweetrip.de

Sweetrip GmbH mainly focuses on Import& Export business of Germany and European food products. Our Products range includes sweets, bakeries, health products, organic products, beverages.
Our target is to develop a world class Import& Export platform for international food products.

Forestlee Corporation

8.2C7-01

Address: 日本 Japan Tokyo-Tachikawa-shi-2-3-17 Shibasaki-cho
Tel: 02163373028
Email: wang@lifeparadise.cn
Web:

FORESTLEE specializes in the export of high-quality food from Hokkaido, Japan. It is the organizer of the first Hokkaido exhibition in China Expo. With the symbol of "TAKUMI", more than 60 Japanese enterprises have joined hands to enter the Chinese market.

Moulamein Food Group Australia Pty LTD

8.2C7-02

Address: 澳大利亚 Australia VIC-Swan Hill -41 Sea lake Swan Hill RD
Tel: 03 50322 553
Email: leo@moulameingrain.com.au
Web: www.moulamein.com

MGC is now the largest private grain storage business on Australia's east coast. MGC is heavily focused on creating a path way from paddock to plate, showcasing the nutritious value of locally produced Oats.

MAURIZIO RUSSO S.R.L

8.2C7-03

Address: 意大利 Italy SALERNO-CAVE DE'TIRRENI -VIA XXV LUGLIO 269
Tel: 02159110629
Email: sangduoshi.lia@hotmail.com
Web: www.mauriziorusso.it

Just like our father Maurizio Russo ,we believe in the family project started way back in 1899:the never-ending pursuit of quality. His creativity, cheerfulness and enthusiasm are our legacy and we keep his dream alive and spread it all over the world with the same commitment and passion.

Entrepreneur Orazov Guvanchmurad Tirkishovich

8.2C7-04

Address: 土库曼斯坦 Turkmenistan MARY-MARY-745400, Turkmenistan Mary region Mary city, street Aga-Hanjayev 69/2
Tel: 13857866500
Email: fanfan@nb-victeam.com
Web: www.tazeay.com.cn

Since 2007 the company "Täze aý" delivers production of a various kind of a batch, ice-cream and sausage products in specialised shops and supermarkets on all districts of Turkmenistan and capital Ashgabat. "Täze aý" proves the efficiency, improving and modernising all resources. The company dynamically develops to keep up to date and even to advance it.

IBIC食品株式会社 / IBIC FOODS Co.,Ltd.

8.2C7-06

Address: 日本 東区苗穂町13丁目1-15 -札幌市-日本 Japan 1-15 - Miajucho, East District, 13 Dingmu-Sapporo, Japan
Tel: 13248629123
Email: 1131168684@qq.com
Web: www.ibic.info/company

生产制造销售调味品
IBIC FOODS Co.,Ltd. たれ・だし・スープ製造 アイビック食品株式会社

BioCham

8.2C7-10

Address: 叙利亚 Syria Damascus Suburb-Lot 32, Alhussieneh, Katana
Tel: +963944231380
Email: rali-adeeb@biocham.com
Web: www.biocham.com

BioCham is the implementation of our beliefs". to provide a wide range of the highest quality Hydrolats, Essential Oils, Cold Pressed Oils & Natural Extracts, to help our consumers ADOPT Nature's Extracts in their daily lives with products that can be produced in Syria and the Middle East for an increasingly discerning market especially in Food, Pharmaceuticals, Aromatherapy and cosmetics.

Syrian Olive Oil Private Joint Stock Company

8.2C7-11

Address: 叙利亚 Syria Damascus-Damascus - Syria
Tel: +963113714022
Email: a.husam@sycof-o.com
Web: www.sycof-o.com

We are one of the leading producer and exporter of olive oil in Syria, we do export our products to the biggest and most famous companies around the world.
We deal with extra virgin and virgin olive oil in bulk or bottled in different sizes and types.

Betinjaneh Brothers Company

8.2C7-12

Address: 叙利亚 Syria Damascus-Damascus-Syria
Tel: +963112311232
Email: a.husam@sycof-o.com
Web: www.betinjaneh.com

We have established a new modern factory for table olives which is considered one of the newest plants in the region, the main idea of the project is to producing all kinds of green and black olives (whole & pitted), sliced, stuffed with almond, carrots, garlic and green pepper, we can also produce Makdous, Pickles, Pomegranate Molasses, and many canned foods.

Omikenshi co.,ltd

8.2C7-14

Address: 日本 Japan 4F 4-1-1, Minamihonmachi, Chuo-ku Osaka 541-8541 JAPAN
Tel: 81-6-6210-5316
Email: matsumoto-takahiro@omikenshi.co.jp
Web: www.omikenshi.co.jp

Omikenshi Co., Ltd, established in 1917, is a leading rayon manufacturer in Japan, a company that develops branding towels, skin-friendly cosmetics and real estate and diversified business.
While researching cellulose that is familiar to the food industry with raw materials of rayon, we entered the food business as a new business.
Glucomannan was added to cellulose to improve the texture, which.

Silvermill Natrual Beverage PVT LTD

8.2C7-16

Address: 斯里兰卡 Sri Lanka Colombo-148/1, Kynsey Road
Tel: +86 21 67643621
Email: schadow.chen@poweresr.com
Web:

Silvermill Group of Companies established in 1920 is a 4th generation family business lead by the Silva family and possibly the oldest operating coconut company in the world. With all of the requisite quality certifications and accolades, Silvermill remains committed to the art and craft of manufacturing an innovative range of coconut products for reputed industrial, food service and retails.

BIECO (CY) TRADING CO LIMITED

8.2C7-17

Address: 塞浦路斯 Cyprus P.O.Box 16039, 2085 Nicosia, Cyprus
Tel: 020-89308081
Email: freeape@vip.163.com
Web:

BIECO is an industry company from Republic of Cyprus. We are engaged in project contracting, government procurement, industry and trade investment. According to the needs of the Chinese market, we have accumulated our own source resources and imported high-quality food to China. We have very stable supply chains in Cyprus, Greece, Italy and Spain which can meet the needs of the market in China.

Megastar S&T S.R.L.

8.2C7-18

Address: 多米尼加 Dominican Republic Santo Domingo-Santo Domingo-Av. 27 de febrero, No. 414,Mirador Norte
Tel: 18311048456
Email: bns_d4@northstarchina.com
bns_inquiry@northstarchina.com
Web: www.megastar.do

多米尼加巨星科技有限公司，成立于2012年，自公司在多米尼加成立之日起，致力于促进两国经贸交流，积极开拓双边市场，发挥加强两国经济与贸易往来的纽带与桥梁作用。
MEGASTAR S&T SRL，founded in 2012, since the first day of its legal establishment in Dominican Republic, Megastar S&T is dedicated to fostering the bilateral collaboration in aspect of economy and commerce, playing the important role of a bond and bridge of bringing two countries closer economically and commercially.

Near East Olive Products

8.2C7-22

Address: 叙利亚 Syria Syria-Damascus-10 Nouri Pach Street
Tel: +963113344961
Email: ydiab@neop.biz
Web: www.neop.biz

Near East Olive Products, (NEOP) and DAR-Zaiyoun sister company in (SA) are manufacturers & leading exporters of olive oil company in Syria & Saudi Arabia, NEOP is the first Syrian company to be able to export olive oil to Europe, our high-Quality due to ISO 9001:2015 and HACCP guidance and dedication for perfection . Selling Bottled (Glass, PET, Tins) and bulk Virgin & extra virgin olive oil.

ABU BADER YASSIN HAIDER FOR SWEET INDUSTRY / ABU BADER YASSEN HAIDER FOR SWEET INDUSTRY

8.2C7-23

Address: 叙利亚 Syria DAMASCUS-DAMASCUS-MIDAN
Tel: 963 9588 / 963 119588
Email: a.husam@sycof-o.com
export@yhaider.com
Web: www.yhaider.com

The best, oldest and the most genuine arabic sweets manufacturer in Syria and the middle east since 1922.

dakka kadima

8.2C7-24

Address: 叙利亚 大马士革-阿勒颇-AL Shakh Naggar工业城-72022号-192 Syria
Al Shakh Naggar-industrial City-C. r72022 l.r192 Aleppo Syria
Tel: 02158880893
Email: 18001133666@189.cn
Web:

达卡卡蒂玛，位于叙利亚阿勒颇，有着数百年的历史，是一家主要生产化妆品的工厂，产品以天然植物产品为主，如传统的阿勒颇古皂、精油皂、洗发水、沐浴露、乳液、纯露、精油、面膜、冷榨油、香水等。
达卡卡蒂玛2017年进入中国，如今越来越多的中国消费者使用达卡卡蒂玛的产品。叙利亚副总理穆阿利姆在2019年受邀访问中国时，在参观北京世园会期间特别推荐了达卡卡蒂玛。
Dakka Kadima, located in Aleppo, Syria, is a comestics factory with hundreds of years history. It mainly produces natural plants products, such as traditional Aleppo soaps, essential oil soaps, shampoo, shower gel, cream, hydrolat, essential oil, mask, cold pressed oil, perfume and so on. Dakka Kadima entered into Chinese market in 2017, now more and more Chinese customers are using its products.

FINE WINE ALL THE TIME

8.2C8-03

Address: 马尔代夫 Maldives Laamu Fonadhoo-BluBridge site-Blubridge Inc
Tel: 15958859366
Email: hanhongjiang@hr.com.cn
Web:

Our company operates wines from Greek and Spanish wineries.

Jamaica Standard Products Co.,Ltd

8.2C8-01

Address: 牙买加 Jamaica TJamaica W.I.-Manchester-P.O.2 Williams Field
Tel: 021-65802393
Email: gerald_h@126.com
Web: www.wallenfordblue.com.cn

Jamaica Standard Products Co.,Ltd于1942成立，将传统的咖啡制作工艺与现代化技术相结合，根据企业多年积累的咖啡种植、加工、制作工艺，整理并实践出一套科学系统的生产执行标准，产品受到全球咖啡爱好者的喜爱与青睐。
1993年，“蓝标沃伦芬”蓝山咖啡、高山咖啡、男爵庄园咖啡，荣获被誉为“食品业的诺贝尔”的 —— Monde Selection“国际优质食品组织”金奖。
Jamaica Standard Products Co.,Ltd was founded in 1942, which combines the traditional coffee production technology with modern technology. According to the coffee planting, processing and production technology accumulated by enterprises for many years, a set of scientific and systematic production implementation standards has been sorted out and practiced.

樂活生技開發股份有限公司 / LOHAS Biotech Development Corp.

8.2C8-05

Address: 台湾地区 臺北市-內湖區-陽光街300號2F Taiwan China Taipei-NeiHu-2F.,No.300,Yang Gung St.,
Tel: 0227993222#7291
Email: kempho@lbd.com.tw
Web: www.lbd.com.tw

樂活生技創辦人簡明仁董事長為實現禮運大同篇「故人不獨親其親，不獨子其子，使老有所終，壯有所用，幼有所長，鰥寡孤獨，廢疾者皆有所養」的理想世界，邀集專家、學者，整合產、官、學、研的資源，在2010年10月成立樂活生技，以養生、純淨的頂級香檳茸為本，以獨特創新、整合策略資源的植物工房經營模式，打造農民希望工程。
LOHAS, founded in 2010, is the abbreviation of Lifestyles of Health and Sustainability, which means it is a lifestyle of taking care of human's physical and mental health while maintaining the sustainable development of the earth. We provide customers a soothing pace and a natural rhythm, and learning a new value of life through a healthy, pure, and unburdened diet.

South Pacific Mozuku Tonga Ltd

8.2C8-02

Address: 汤加 Tonga Tongatapu-Nuku'alofa-Hofoa Road, Sopu o Taufahau
Tel: +676 8777 4092
Email: southpacificmozuku@gmail.com
Web:

South Pacific Mozuku Tonga Ltd, is a small family business based in Tonga, run by a husband & wife team. We specialise in harvesting, processing and exporting Tongan seaweed into the international market. SPM was formerly known as Tangle Nano Co., LTD. We hold over 20 years of experience in Tonga's Seaweed and Aquaculture Industry.

Stronghold Trading

8.2C8-09

Address: 美国 United States of America NY-Maspeth-5830 Grand Ave
Tel: 718-628-9100
Email: lenny@strongholdteam.com
Web:

Stronghold Trading LLC is the distributor of brand Fortaleza Foods. Stronghold sells & distributes Fortaleza Food products to customers globally including, China, Vietnam, Japan, Korea, Middle East and North Africa.

* The deadline for information submission is 24:00, September 20. All information shall be provided and filled in by the exhibitors and the operating agencies. The Organizers bear no liability for any errors or mistakes in the information.
* 信息截止到北京时间9月20日24:00，所有信息均为参展商及组展机构自行提供及填报。若有错误，承办单位概不负责。

食品及农产品展区

FOOD & AGRICULTURAL PRODUCTS

7.2/8.1/8.2馆 Hall